cinquecento SERIES K590X K660X K750X

NEW

CIB UNIGAS >60 <80 mg/kWh CLASS 3 Low NOx

GAS

The new K type CINQUECENTO series **Low NO_x burners Class 3 (< 80 mg/kWh**) made in aluminum housing with a backward curved centrifugal impeller has been developed to meet the current and future requests regarding the low emissions of NO_x.
The innovation of the combustion head allows to achieve substantial improvements in terms of emissions reduction, flame stability and reliability.
The perfect mix of air/gas within the combustion head of these burners, guarantees a very uniform flame in all working conditions.

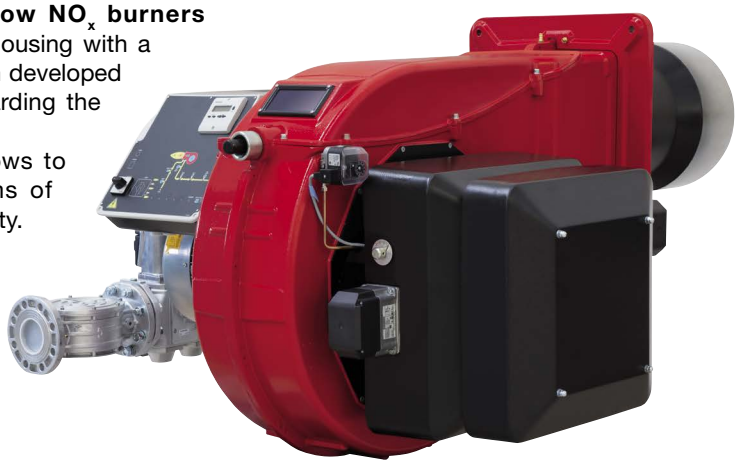

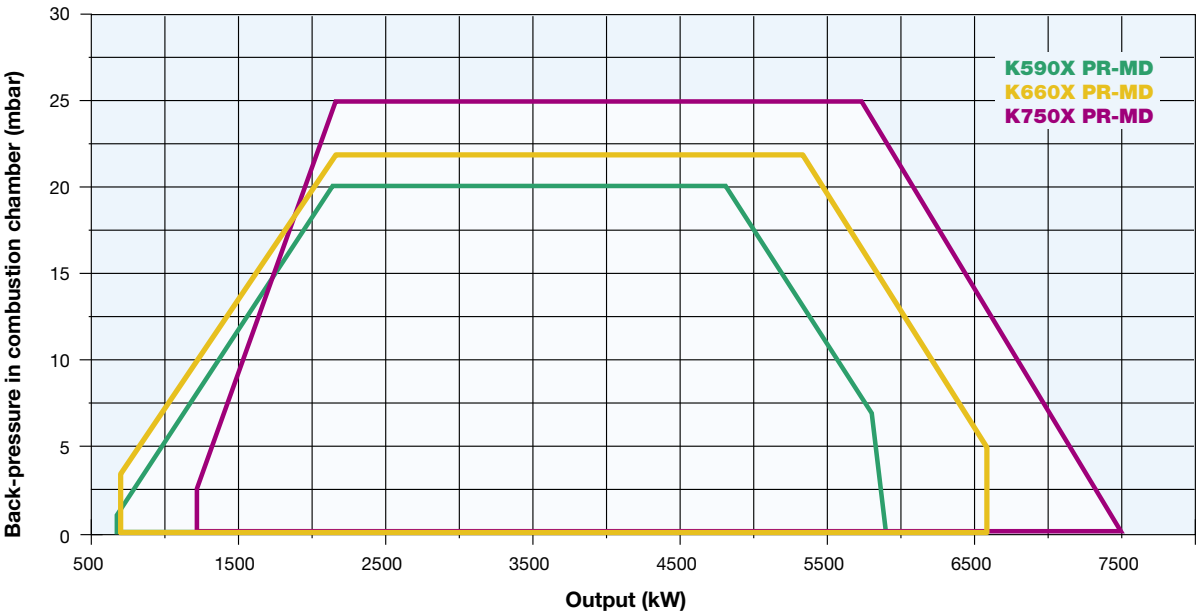

K590X K660X K750X cinquecento SERIES

TECHNICAL DETAILS

Type	Model	Output kW		Auxiliary electrical power supply	Motor electrical power supply	Fan motor	Gas connections	Noise level
		min.	max.			kW		dBA
K590X	M-.xx.xR.xx.A.1.xxx	670	5.900	230 V 1N AC 50 Hz	400 V 3 AC 50 Hz	15,0	DN65 - DN80 - DN100 - DN125	< 85
K660X	M-.xx.xR.xx.A.1.xxx	680	6.600	230 V 1N AC 50 Hz	400 V 3 AC 50 Hz	15,0	DN65 - DN80 - DN100 - DN125	< 85
K750X	M-.xx.xR.xx.A.1.xxx	860	7.500	230 V 1N AC 50 Hz	400 V 3 AC 50 Hz	15,0	DN65 - DN80 - DN100 - DN125	< 85

For the configuration of the gas train, see page 112-113.

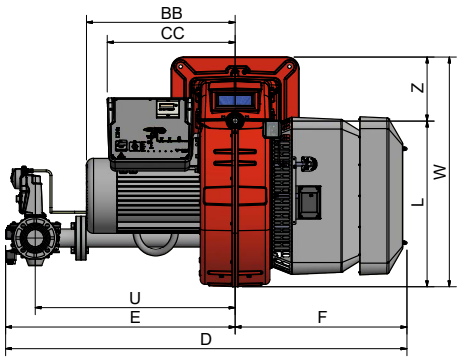

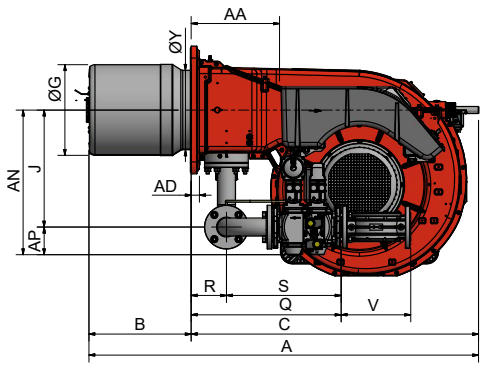

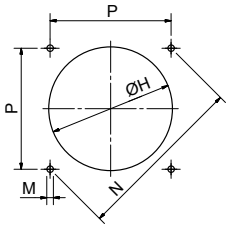

Suggested boiler drilling

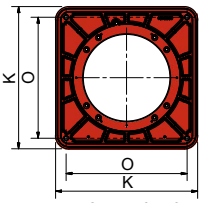

Burner flange

Type	Packaging dimensions (mm)			
	l	p	h	kg
K590X	2040	1450	1220	430
K660X	2040	1450	1220	455
K750X	2040	1450	1220	455

Approximate values (regarding model with gas train DN80)

Type	Model	Overall dimensions (mm)																														
		AS	AL	AA	AD	AN	AP	BS	BL	BB	C	CC	D	E	F	G	H	J	K	L	M	N	O	P	Q	R	S	U	V	W	Y	Z
K590X	M-.xx.xR.xx.A.1.65	1741	1841	366	25	611	117	430	530	626	1311	524	1695	969	726	360	400	494	540	690	M16	651	460	460	636	150	487	845	292	960	356	270
K590X	M-.xx.xR.xx.A.1.80	1741	1841	366	25	626	132	430	530	626	1311	524	1728	1002	726	360	400	494	540	690	M16	651	460	460	687	150	538	875	313	960	356	270
K590X	M-.xx.xR.xx.A.1.100	1741	1841	366	25	639	145	430	530	626	1311	524	1808	1082	726	360	400	494	540	690	M16	651	460	460	791	150	642	942	353	960	356	270
K590X	M-.xx.xR.xx.A.1.125	1741	1841	366	25	738	175	430	530	626	1311	524	2073	1347	726	360	400	562	540	690	M16	651	460	460	904	150	754	1192	479	960	356	270
K660X	M-.xx.xR.xx.A.1.65	1741	1841	366	25	611	117	430	530	626	1311	524	1695	969	726	383	423	494	540	690	M16	651	460	460	636	150	487	845	292	960	356	270
K660X	M-.xx.xR.xx.A.1.80	1741	1841	366	25	626	132	430	530	626	1311	524	1728	1002	726	383	423	494	540	690	M16	651	460	460	687	150	538	875	313	960	356	270
K660X	M-.xx.xR.xx.A.1.100	1741	1841	366	25	639	145	430	530	626	1311	524	1808	1082	726	383	423	494	540	690	M16	651	460	460	791	150	642	942	353	960	356	270
K660X	M-.xx.xR.xx.A.1.125	1741	1841	366	25	738	175	430	530	626	1311	524	2073	1347	726	383	423	562	540	690	M16	651	460	460	904	150	754	1192	479	960	356	270
K750X	M-.xx.xR.xx.A.1.65	1741	1841	366	25	611	117	430	530	626	1311	524	1695	969	726	419	470	494	540	690	M16	651	460	460	636	150	487	845	292	960	336	270
K750X	M-.xx.xR.xx.A.1.80	1741	1841	366	25	626	132	430	530	626	1311	524	1728	1002	726	419	470	494	540	690	M16	651	460	460	687	150	538	875	313	960	336	270
K750X	M-.xx.xR.xx.A.1.100	1741	1841	366	25	639	145	430	530	626	1311	524	1808	1082	726	419	470	494	540	690	M16	651	460	460	791	150	642	942	353	960	336	270
K750X	M-.xx.xR.xx.A.1.125	1741	1841	366	25	738	175	430	530	626	1311	524	2073	1347	726	419	470	562	540	690	M16	651	460	460	904	150	754	1192	479	960	336	270

Approximate values

K590X K660X K750X cinquecento SERIES

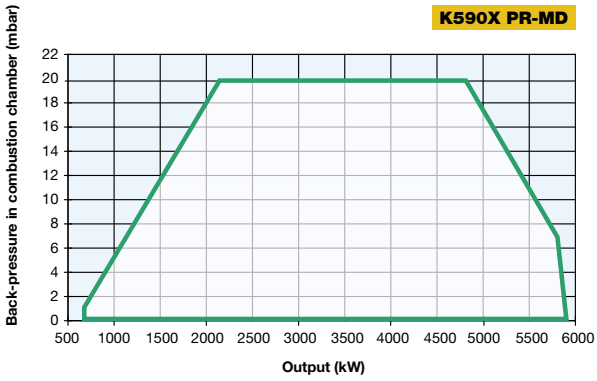

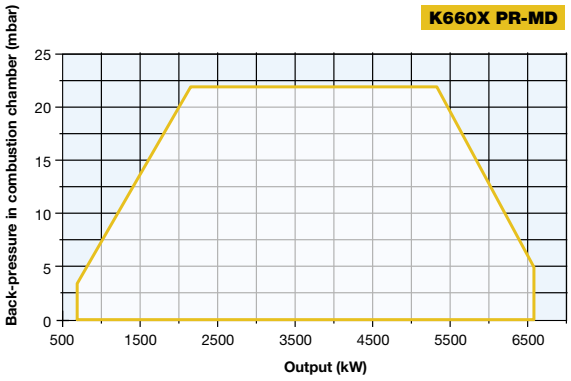

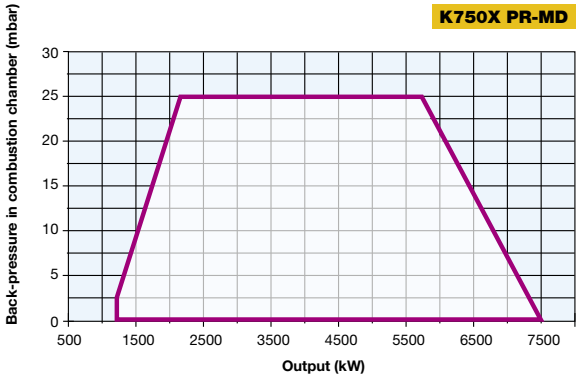

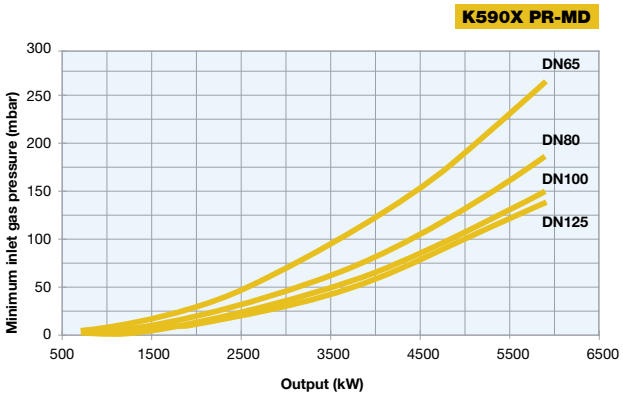

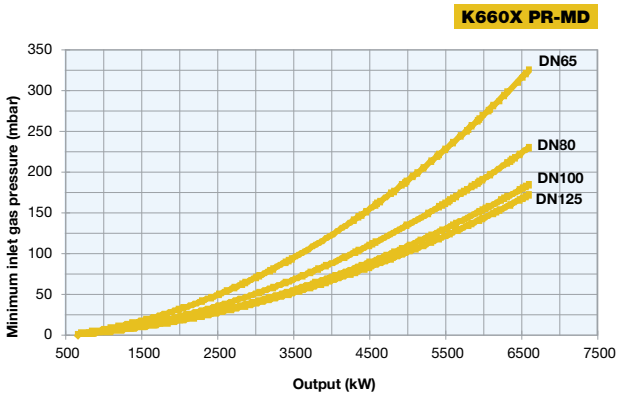

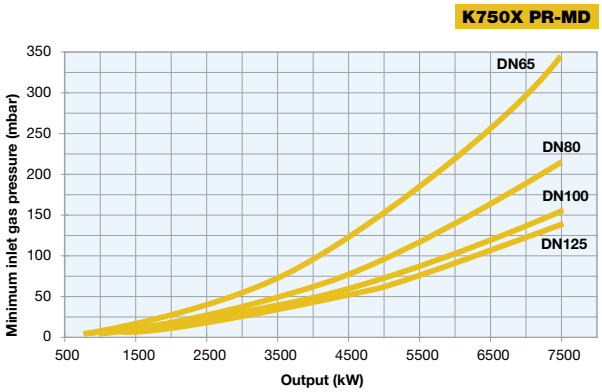

Attention: the graph shows the value of the gas output (kW) against the corresponding pressure without the combustion chamber back pressure. To know the minimum gas pressure at gas train, in order to get the gas output, it is necessary to add the boiler back pressure to the value read on the curve.