N880X N925X N1060X mille SERIES

TECHNICAL DETAILS

Type	Model	Output kW		Auxiliary electrical power supply	Motor electrical power supply	Fan motor	Gas connections	Noise level
		min.	max.			kW		dBA
N880X	M-.xx.xR.xx.A.1.xxx	1.500	8.800	230 V 1N AC 50 Hz	400 V 3 AC 50 Hz	18,5	DN80 - DN100 - DN125	< 82,2
N925X	M-.xx.xR.xx.A.1.xxx	1.300	9.250	230 V 1N AC 50 Hz	400 V 3 AC 50 Hz	22,0	DN80 - DN100 - DN125	< 85,6
N1060X	M-.xx.xR.xx.A.1.xxx	1.550	10.600	230 V 1N AC 50 Hz	400 V 3 AC 50 Hz	30,0	DN80 - DN100 - DN125	< 85,6

For the configuration of the gas train, see page 112-113.

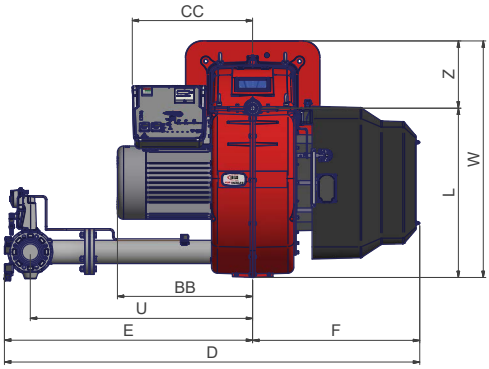

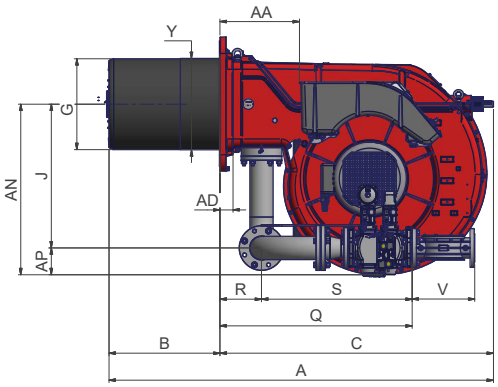

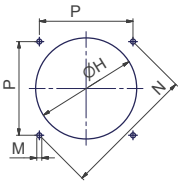

Suggested boiler drilling

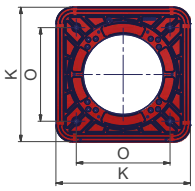

Burner flange

Type	Packaging dimensions (mm)			
	l	p	h	kg
N880X	2300	1720	1410	630
N925X	2300	1720	1410	670
N1060X	2300	1720	1410	720

Approximate values (regarding model with gas train DN100)

Type	Model	Overall dimensions (mm)																														
		AS	AL	AA	AD	AN	AP	BS	BL	BB	C	CC	D	E	F	G	H	J	K	L	M	N	O	P	Q	R	S	U	V	W	Y	Z
N880X	M-.xx.xR.xx.A.x.1.80	1850	1950	384	35	841	132	445	545	648	1345	684	1842	1219	623	446	496	709	660	831	M16	651	460	460	944	204	740	1092	310	1161	399	330
N880X	M-.xx.xR.xx.A.x.1.100	1850	1950	384	35	854	145	445	545	664	1345	684	1858	1235	623	446	496	709	660	831	M16	651	460	460	848	204	644	1092	350	1161	399	330
N880X	M-.xx.xR.xx.A.x.1.125	1850	1950	384	35	884	175	445	545	664	1345	684	1972	1349	623	446	496	709	660	831	M16	651	460	460	958	204	754	1192	478	1161	399	330
N925X	M-.xx.xR.xx.A.x.1.80	1850	1950	384	35	841	132	445	545	664	1345	684	1842	1219	623	446	496	709	660	831	M16	651	460	460	944	204	740	1092	310	1161	399	330
N925X	M-.xx.xR.xx.A.x.1.100	1850	1950	384	35	854	145	445	545	664	1345	684	1858	1235	623	446	496	709	660	831	M16	651	460	460	848	204	644	1092	350	1161	399	330
N925X	M-.xx.xR.xx.A.x.1.125	1850	1950	384	35	884	175	445	545	664	1345	684	1972	1349	623	446	496	709	660	831	M16	651	460	460	958	204	754	1192	478	1161	399	330
N1060X	M-.xx.xR.xx.A.x.1.80	1850	1950	384	35	841	132	445	545	664	1345	684	1842	1219	623	489	539	709	660	831	M16	651	460	460	944	204	740	1092	310	1161	399	330
N1060X	M-.xx.xR.xx.A.x.1.100	1850	1950	384	35	854	145	445	545	664	1345	684	1858	1235	623	489	539	709	660	831	M16	651	460	460	848	204	644	1092	350	1161	399	330
N1060X	M-.xx.xR.xx.A.x.1.125	1850	1950	384	35	884	175	445	545	664	1345	684	1972	1349	623	489	539	709	660	831	M16	651	460	460	958	204	754	1192	478	1161	399	330

Approximate values