PG30 - PG60
PG70 - PG81

Double-stage Light oil Burners

MANUAL OF INSTALLATION - USE - MAINTENANCE

CIB UNIGAS

BURNERS - BRUCIATORI - BRULERS - BRENNER - QUEMADORES - ГОРЕЛКИ

M03965CF Rel. 4.9 08/2024

DANGERS, WARNINGS AND NOTES OF CAUTION

THIS MANUAL IS SUPPLIED AS AN INTEGRAL AND ESSENTIAL PART OF THE PRODUCT AND MUST BE DELIVERED TO THE USER.

INFORMATION INCLUDED IN THIS SECTION ARE DEDICATED BOTH TO THE USER AND TO PERSONNEL FOLLOWING PRODUCT INSTALLATION AND MAINTENANCE.

THE USER WILL FIND FURTHER INFORMATION ABOUT OPERATING AND USE RESTRICTIONS, IN THE SECOND SECTION OF THIS MANUAL. WE HIGHLY RECOMMEND TO READ IT.

CAREFULLY KEEP THIS MANUAL FOR FUTURE REFERENCE.

1) GENERAL INTRODUCTION

- The equipment must be installed in compliance with the regulations in force, following the manufacturer's instructions, by qualified personnel.
- Qualified personnel means those having technical knowledge in the field of components for civil or industrial heating systems, sanitary hot water generation and particularly service centres authorised by the manufacturer.
- Improper installation may cause injury to people and animals, or damage to property, for which the manufacturer cannot be held liable.
- Remove all packaging material and inspect the equipment for integrity.

In case of any doubt, do not use the unit - contact the supplier.

The packaging materials (wooden crate, nails, fastening devices, plastic bags, foamed polystyrene, etc), should not be left within the reach of children, as they may prove harmful.

- Before any cleaning or servicing operation, disconnect the unit from the mains by turning the master switch OFF, and/or through the cut-out devices that are provided.
- Make sure that inlet or exhaust grilles are unobstructed.
- In case of breakdown and/or defective unit operation, disconnect the unit. Make no attempt to repair the unit or take any direct action.

Contact qualified personnel only.

Units shall be repaired exclusively by a servicing centre, duly authorised by the manufacturer, with original spare parts and accessories.

Failure to comply with the above instructions is likely to impair the unit's safety.

To ensure equipment efficiency and proper operation, it is essential that maintenance operations are performed by qualified personnel at regular intervals, following the manufacturer's instructions.

- When a decision is made to discontinue the use of the equipment, those parts likely to constitute sources of danger shall be made harmless.
- In case the equipment is to be sold or transferred to another user, or in case the original user should move and leave the unit behind, make sure that these instructions accompany the equipment at all times so that they can be consulted by the new owner and/or the installer.
- This unit shall be employed exclusively for the use for which it is meant. Any other use shall be considered as improper and, therefore, dangerous.

The manufacturer shall not be held liable, by agreement or otherwise, for damages resulting from improper installation, use and failure to comply with the instructions supplied by the manufacturer.The occurrence of any of the following circustances may cause explosions, polluting unburnt gases (example: carbon monoxide CO), burns, serious harm to people, animals and things:

- Failure to comply with one of the WARNINGS in this chapter
- Incorrect handling, installation, adjustment or maintenance of the burner
- Incorrect use of the burner or incorrect use of its parts or optional supply

2) SPECIAL INSTRUCTIONS FOR BURNERS

- The burner should be installed in a suitable room, with ventilation openings complying with the requirements of the regulations in force, and sufficient for good combustion.
- Only burners designed according to the regulations in force should be used.
- This burner should be employed exclusively for the use for which it was designed.
- Before connecting the burner, make sure that the unit rating is the same as delivery mains (electricity, gas oil, or other fuel).
- Observe caution with hot burner components. These are, usually, near to the flame and the fuel pre-heating system, they become hot during the unit operation and will remain hot for some time after the burner has stopped.

When the decision is made to discontinue the use of the burner, the user shall have qualified personnel carry out the following operations:

a Remove the power supply by disconnecting the power cord from the mains.

b Disconnect the fuel supply by means of the hand-operated shut-off valve and remove the control handwheels from their spindles.

Special warnings

- Make sure that the burner has, on installation, been firmly secured to the appliance, so that the flame is generated inside the appliance fire-box.
- Before the burner is started and, thereafter, at least once a year, have qualified personnel perform the following operations:

a set the burner fuel flow rate depending on the heat input of the appliance;

b set the flow rate of the combustion-supporting air to obtain a combustion efficiency level at least equal to the lower level required by the regulations in force;

c check the unit operation for proper combustion, to avoid any harmful or polluting unburnt gases in excess of the limits permitted by the regulations in force;

d make sure that control and safety devices are operating properly;

e make sure that exhaust ducts intended to discharge the products of combustion are operating properly;

f on completion of setting and adjustment operations, make sure that all mechanical locking devices of controls have been duly tightened;

g make sure that a copy of the burner use and maintenance instructions is available in the boiler room.

- In case of a burner shut-down, reser the control box by means of the RESET pushbutton. If a second shut-down takes place, call the Technical Service, **without trying to RESET further**.
- The unit shall be operated and serviced by qualified personnel only, in compliance with the regulations in force.

3) GENERAL INSTRUCTIONS DEPENDING ON FUEL USED

3a) ELECTRICAL CONNECTION

- For safety reasons the unit must be efficiently earthed and installed as required by current safety regulations.
- It is vital that all saftey requirements are met. In case of any doubt, ask for an accurate inspection of electrics by qualified personnel, since the manufacturer cannot be held liable for damages that may be caused by failure to correctly earth the equipment.
- Qualified personnel must inspect the system to make sure that it is adequate to take the maximum power used by the equipment shown on the equipment rating plate. In particular, make sure that the system cable cross section is adequate for the power absorbed by the unit.
- No adaptors, multiple outlet sockets and/or extension cables are permitted to connect the unit to the electric mains.
- An omnipolar switch shall be provided for connection to mains, as required by the current safety regulations.
- The use of any power-operated component implies observance of a few basic rules, for example:
  - do not touch the unit with wet or damp parts of the body and/or with bare feet;
  - do not pull electric cables;
  - do not leave the equipment exposed to weather (rain, sun, etc.) unless expressly required to do so;
  - do not allow children or inexperienced persons to use equipment;
- The unit input cable shall not be replaced by the user.
  In case of damage to the cable, switch off the unit and contact qualified personnel to replace.
  When the unit is out of use for some time the electric switch supplying all the power-driven components in the system (i.e. pumps, burner, etc.) should be switched off.

3b) FIRING WITH GAS, LIGHT OIL OR OTHER FUELS

GENERAL

- The burner shall be installed by qualified personnel and in compliance with regulations and provisions in force; wrong installation can cause injuries to people and animals, or damage to property, for which the manufacturer cannot be held liable.
- Before installation, it is recommended that all the fuel supply system pipes be carefully cleaned inside, to remove foreign matter that might impair the burner operation.
- Before the burner is commissioned, qualified personnel should inspect the following:

a the fuel supply system, for proper sealing;
b the fuel flow rate, to make sure that it has been set based on the firing rate required of the burner;
c the burner firing system, to make sure that it is supplied for the designed fuel type;
d the fuel supply pressure, to make sure that it is included in the range shown on the rating plate;
e the fuel supply system, to make sure that the system dimensions are adequate to the burner firing rate, and that the system is equipped with all the safety and control devices required by the regulations in force.

- When the burner is to remain idle for some time, the fuel supply tap or taps should be closed.

SPECIAL INSTRUCTIONS FOR USING GAS

Have qualified personnel inspect the installation to ensure that:

a the gas delivery line and train are in compliance with the regulations and provisions in force;
b all gas connections are tight;
c the boiler room ventilation openings are such that they ensure the air supply flow required by the current regulations, and in any case are sufficient for proper combustion.

- Do not use gas pipes to earth electrical equipment.
- Never leave the burner connected when not in use. Always shut the gas valve off.
- In case of prolonged absence of the user, the main gas delivery valve to the burner should be shut off.

Precautions if you can smell gas

a do not operate electric switches, the telephone, or any other item likely to generate sparks;
b immediately open doors and windows to create an air flow to purge the room;
c close the gas valves;
d contact qualified personnel.

- Do not obstruct the ventilation openings of the room where gas appliances are installed, to avoid dangerous conditions such as the development of toxic or explosive mixtures.

DIRECTIVES AND STANDARDS

Gas burners

European directives

-Regulation 2016/426/UE (appliances burning gaseous fuels)
-2014/35/UE (Low Tension Directive)
-2014/30/UE (Electromagnetic compatibility Directive)
-2006/42/EC (Machinery Directive)

Harmonized standards

-UNI EN 676 (Automatic forced draught burners for gaseous fuels)
-EN 55014-1 (Electromagnetic compatibility- Requirements for house hold appliances, electric tools and similar apparatus)
-EN 60204-1:2006 (Safety of machinery – Electrical equipment of machines.)
-CEI EN 60335-1 (Specification for safety of household and similar electrical appliances);
-CEI EN 60335-2-102 (Household and similar electrical appliances. Safety. Particular requirements for gas, oil and solid-fuel burning appliances having electrical connections).
-UNI EN ISO 12100:2010 (Safety of machinery - General principles for design - Risk assessment and risk reduction);

Light oil burners

European directives

-2014/35/UE (Low Tension Directive)
-2014/30/UE (Electromagnetic compatibility Directive)
-2006/42/EC (Machinery Directive)

Harmonized standards

-UNI EN 267-2011(Automatic forced draught burners for liquid fuels)
-EN 55014-1 (Electromagnetic compatibility- Requirements for house hold appliances, electric tools and similar apparatus)
-EN 60204-1:2006 (Safety of machinery – Electrical equipment of machines.)
-CEI EN 60335-1 (Specification for safety of household and similar electrical appliances);
-CEI EN 60335-2-102 (Household and similar electrical appliances. Safety. Particular requirements for gas, oil and solid-fuel burning appliances having electrical connections).
-UNI EN ISO 12100:2010 (Safety of machinery - General principles for design - Risk assessment and risk reduction);

Heavy oil burners

European Directives

-2014/35/UE (Low Tension Directive)
-2014/30/UE (Electromagnetic compatibility Directive)
-2006/42/EC (Machinery Directive)

Harmonized standards

-UNI EN 267(Automatic forced draught burners for liquid fuels)
-EN 55014-1 (Electromagnetic compatibility- Requirements for house hold appliances, electric tools and similar apparatus)
-EN 60204-1:2006 (Safety of machinery – Electrical equipment of machines.)
-CEI EN 60335-1 (Specification for safety of household and similar electrical appliances);
-CEI EN 60335-2-102 (Household and similar electrical appliances. Safety. Particular requirements for gas, oil and solid-fuel burning appliances having electrical connections).
-UNI EN ISO 12100:2010 (Safety of machinery - General principles for design - Risk assessment and risk reduction);

Gas - Light oil burners

European Directives

-Regulation 2016/426/UE (appliances burning gaseous fuels)
-2014/35/UE (Low Tension Directive)
-2014/30/UE (Electromagnetic compatibility Directive)
-2006/42/EC (Machinery Directive)

Harmonized standards

-UNI EN 676 (Automatic forced draught burners for gaseous fuels)
-UNI EN 267(Automatic forced draught burners for liquid fuels)
-EN 55014-1 (Electromagnetic compatibility- Requirements for house hold appliances, electric tools and similar apparatus)
-EN 60204-1:2006 (Safety of machinery – Electrical equipment of machines.)
-CEI EN 60335-1 (Specification for safety of household and similar electrical appliances);
-CEI EN 60335-2-102 (Household and similar electrical appliances. Safety. Particular requirements for gas, oil and solid-fuel burning appliances having electrical connections).
-UNI EN ISO 12100:2010 (Safety of machinery - General principles for design - Risk assessment and risk reduction);

Gas - Heavy oil burners

European directives:

-Regulation 2016/426/UE (appliances burning gaseous fuels)
-2014/35/UE (Low Tension Directive)
-2014/30/UE (Electromagnetic compatibility Directive)
-2006/42/EC (Machinery Directive)

Harmonized standards

-UNI EN 676 (Automatic forced draught burners for gaseous fuels)
-EN 55014-1 (Electromagnetic compatibility- Requirements for house hold appliances, electric tools and similar apparatus)
-EN 60204-1:2006 (Safety of machinery – Electrical equipment of machines.)
-CEI EN 60335-1 (Specification for safety of household and similar electrical appliances);
-CEI EN 60335-2-102 (Household and similar electrical appliances. Safety. Particular requirements for gas, oil and solid-fuel burning appliances having electrical connections).
-UNI EN ISO 12100:2010 (Safety of machinery - General principles for design - Risk assessment and risk reduction);

Industrial burners

European directives

-Regulation 2016/426/UE (appliances burning gaseous fuels)
-2014/35/UE (Low Tension Directive)
-2014/30/UE (Electromagnetic compatibility Directive)
-2006/42/EC (Machinery Directive)

Harmonized standards

-EN 55014-1 (Electromagnetic compatibility- Requirements for house hold appliances, electric tools and similar apparatus)
-EN 746-2 (Industrial thermoprocessing equipment - Part 2: Safety requirements for combustion and fuel handling systems)
-UNI EN ISO 12100:2010 (Safety of machinery - General principles for design - Risk assessment and risk reduction);
-EN 60204-1:2006 (Safety of machinery – Electrical equipment of machines.)
-EN 60335-2 (Electrical equipment of non-electric appliances for household and similar purposes. Safety requirements)

Burner data plate

For the following information, please refer to the data plate:

- burner type and burner model: must be reported in any communication with the supplier
- burner ID (serial number): must be reported in any communication with the supplier
- date of production (year and month)
- information about fuel type and network pressure

Type	--
Model	--
Year	--
S.Number	--
Output	--
Oil Flow	--
Fuel	--
Category	--
Gas Pressure	--
Viscosity	--
El.Supply	--
El.Consump.	--
Fan Motor	--
Protection	--
Drwaing n°	--
P.I.N.	--

SYMBOLS USED

WARNING! Failure to observe the warning may result in irreparable damage to the unit or damage to the environment

DANGER! Failure to observe the warning may result in serious injuries or death.

WARNING! Failure to observe the warning may result in electric shock with lethal consequences

Figures, illustrations and images used in this manual may differ in appearance from the actual product.

BURNER SAFETY

The burners - and the configurations described below - comply with the regulations in force regarding health, safety and the environment. For more in-depth information, refer to the declarations of conformity that are an integral part of this Manual.

DANGER! Incorrect motor rotation can seriously damage property and injure people.

Residual risks deriving from misuse and prohibitions

The burner has been built in order to make its operation safe; there are, however, residual risks.

Do not touch any mechanical moving parts with your hands or any other part of your body. Injury hazard
Do not touch any parts containing fuel (i.e. tank and pipes). Scalding hazard
Do not use the burner in situations other than the ones provided for in the data plate.
Do not use fuels other than the ones stated.
Do not use the burner in potentially explosive environments.
Do not remove or by-pass any machine safety devices.
Do not remove any protection devices or open the burner or any other component while the burner is running.
Do not disconnect any part of the burner or its components while the burner is running.
Untrained staff must not modify any linkages.

After any maintenance, it is important to restore the protection devices before restarting the machine.
All safety devices must be kept in perfect working order.
Personnel authorized to maintain the machine must always be provided with suitable protections.

ATTENTION: while running, the parts of the burner near the generator (coupling flange) are subject to overheating. Where necessary, avoid any contact risks by wearing suitable PPE.

PART I: SPECIFICATIONS

BURNERS FEATURES

The fuel coming from the supply line, is pushed by the pump to the nozzle and then into the combustion chamber, where the mixture between fuel and air takes place and consequently the flame.

In the burners, the mixture bertween fuel and air, to perform clean and efficient combustion, is activated by atomisation of oil into very small particles. This process is achieved making pressurised oil pass through the nozzle.

The pump main function is to transfer oil from the tank to the nozzle at required quantity and pressure. To adjust pressure, pumps are provided with a pressure governor (except some models for which a separate adjusting valve is provided). Other pumps are provided with two pressure governors: one for high and one for low pressure (in double-stage systems with one nozzle).

In the double-stage burners, the electric actuator, that moves the air damper, allows the optimisation of the gas flue values, as to get an efficient combustion. The position of the combustion head determines the burner output. The air (comburent) and fuel (light oil) are forced into the combustion chamber, as to let the flame light up.

How to interpret the burner's "Performance curve"

To check if the burner is suitable for the boiler to which it must be installled, the following parameters are needed:

- furnace input, in kW or kcal/h (kW = kcal/h / 860);
- backpressure (data are available on the boiler ID plate or in the user's manual).

Example:

Furnace input: 600kW

Backpressure: 4mbar

In the "Performance curve" diagram (Fig. 1), draw a vertical line matching the furnace input value and an horizontal line matching the backpressure value. The burner is suitable if the intersection point A is inside the performance curve.

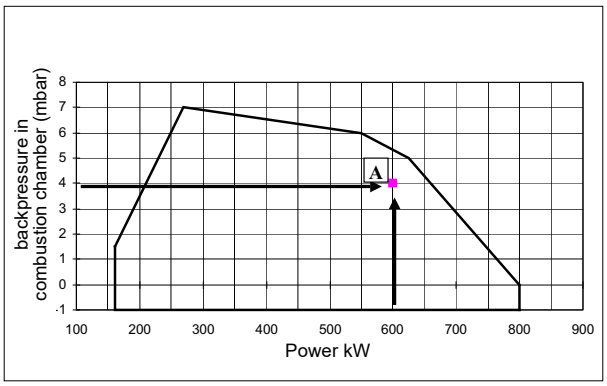

Fig. 1

Data are referred to standard conditions: atmospheric pressure at 1013mbar, ambient temperature at 15°C

Burner model identification

Burners are identified by burner type and model. Burner model identification is described as follows.

Type **PG60** Model **G-. AB. S. *. E. M.** (1) (2) (3) (4) (5) (6) (6)	
(1) BURNER TYPE	**PG30, PG60, PG70, PG81**
(2) FUEL	**G -** Light oil **A -** Biodiesel
(3) OPERATION	**AB -** Double-stage
(4) BLAST TUBEBLAST TUBE	**S -** StandardStandard **L -** Extended
(5) DESTINATION COUNTRYDESTINATION COUNTRY	* - see data plate
(6) BURNER VERSIONBURNER VERSION	**A -** Standard **E** - Terminal box Junction box **M -** With hydraulic ram

BURNERS		PG30	PG30 Triphase	PG60	PG70	PG81
Output	min. -max. kW	105 - 383	105 - 383	145 - 698	291 - 1047	264-1900
Fuel		Light oil				
Viscosity	cSt @ 40°C	2,0 ÷ 7,4				
Light Oil density	kg/m^3	0,84				
Light oil train inlet pressure	max. bar	2				
gas rate-	min. -max. kg/h	8,8 - 32	8,8 - 32	12,2 - 59	25 - 88	22-160
Light oil rate	min. -max. kg/h	10,1 - 37	10,1 - 37	13,9 - 67	28 - 101	25 - 183
Approx. weight		IP40				
Approx. weight	kg	30	30	55	85	85
Operation		Double-stage				
Operating temperature	°C	-10 ÷ +50				
Storage Temperature	°C	-20 ÷ +60				
Working service*		Intermittent				

NOTE: Choosing the nozzle for light oil, consider Hi equal to 10200 kcal/kg.

50 Hz

Possible voltages, check the actual three-phase and single-phase supply voltage on the burner nameplate.

Power supply triphase	V	230 1N a.c.	400 3N a.c. ±10% 50 Hz			
Auxiliary power supply Mono Phase	V	115 2 a.c. / 220 2 a.c. / 230 1N a.c. ±10% 50 Hz				
	Hz	**50**				
Fan motor	kW	0,37	0,75	1,1	2,2	3,0
Total power consumption	kW	0,87	1,25	1,6	2,7	3,5

Electrical data
60 Hz

Possible voltages, check the actual three-phase and single-phase supply voltage on the burner nameplate.

Power supply triphase	V	230 1N a.c.	220 / 230 / 265 / 277 / 380 / 400 / 440 / 460 / 480 / 525 3 a.c.			
Auxiliary power supply Mono Phase	V	110 / 120 / 220 / 230 2 a.c.				
	Hz	**60**				
Fan motor	kW	0,44	0,9	1,32	2,64	3,6
Total power consumption	kW	0,94	1,4	1,82	3,14	4,1

WARNING: Burners are suitable only for indoor operation with a maximum relative humidity of 80%

Performance curves

PG30

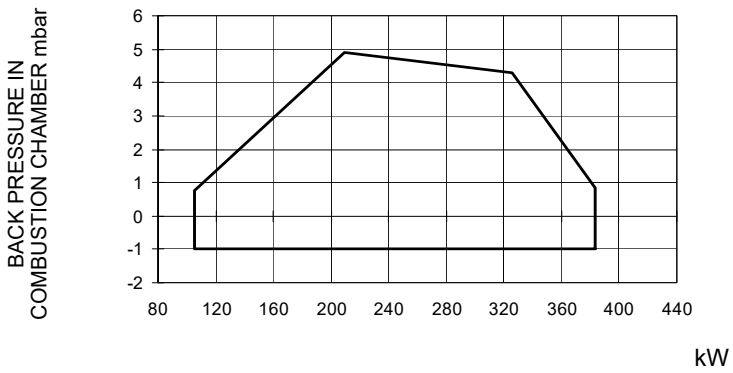

PG60

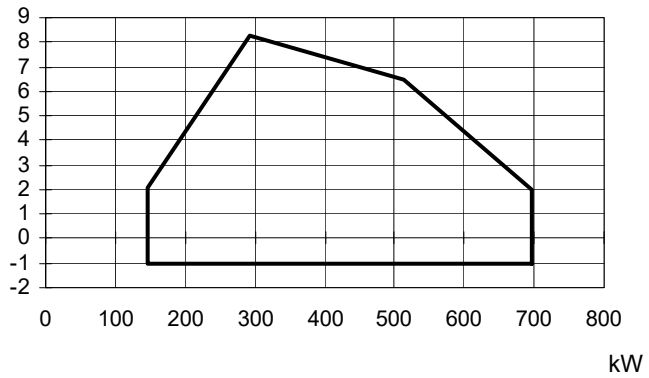

PG70

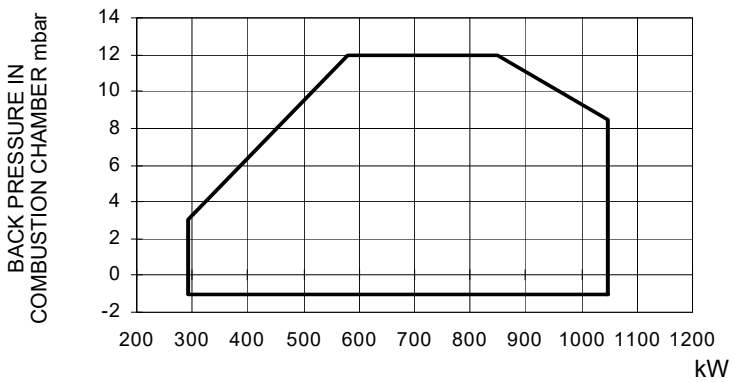

PG81

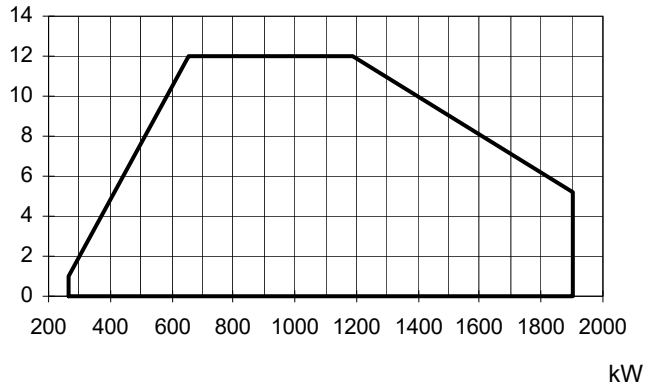

Data are referred to standard conditions: atmospheric pressure at 1013mbar, ambient temperature at 15°C

NOTE: The performance curve is a diagram that represents the burner performance in the type approval phase or in the laboratory tests, but does not represent the regulation range of the machine. On this diagram the maximum output point is usually reached by adjsuting the combustion head to its “MAX” position (see paragraph “Adjusting the combustion head”); the minimum output point is reached setting the combustion head to its “MIN” position. During the first ignition, the combustion head is set in order to find a compromise between the burner output and the generator specifications, that is why the minimum output may be different from the Performance curve minimum

Overall dimensions (mm)

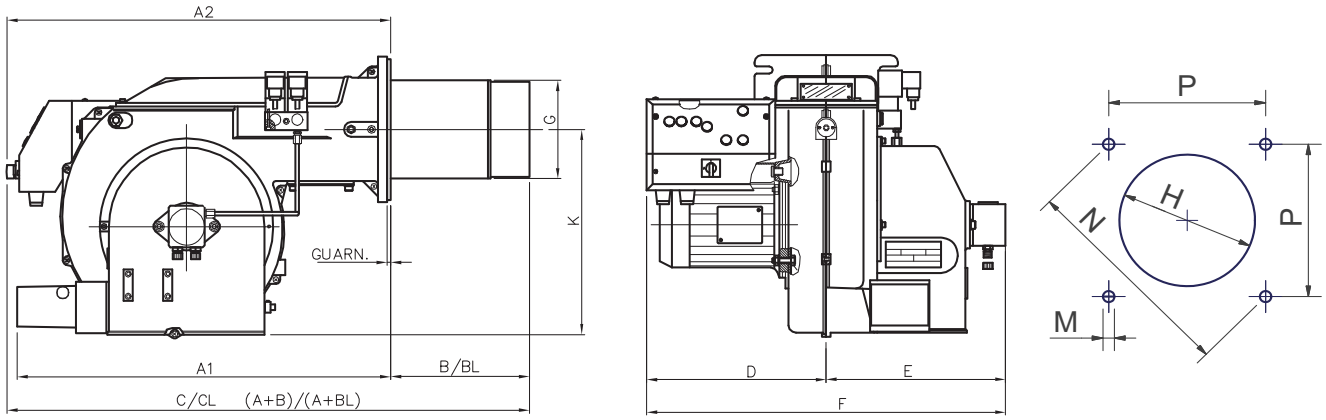

	A1	A2	B*	BL*	C*	CL*	D	E	F	G	H	K	M	N	P
PG30	-	500	150	340	650	840	270	230	500	121	151	292	M10	219	155
PG60	-	600	244	442	844	1042	300	285	585	153	182	350	M10	269	190
PG70	685	-	310	460	995	1145	360	350	710	198	228	375	M10	330	233
PG81	685	-	340	490	1025	1175	370	365	735	234	264	375	M10	330	233

*B, C = measure referred to burner fitted with standard blast tube

*BL, CL = measure referred to burner fitted with extended blast tube

MOUNTINGS AND CONNECTIONS

Transport and storage

ATTENTION! The equipment must be installed in compliance with the regulations in force, following the manufacturer's instructions, by qualified personnel. All handling operations must be carried out with appropriate resources and qualified personnel

ATTENTION: Use intact and correctly dimensioned hoisting equipment, conforms to the local regulations and health and safety regulations. Do not stand under lifted loads.

If the product must be stored, avoid humid and corrosive places. Observe the temperatures stated in the burner data table at the beginning of this manual. The packages containing the burners must be locked inside the means of transport in such a way as to guarantee the absence of dangerous movements and avoid any possible damage.

In case of storage, the burners must be stored inside their packaging, in storerooms protected from the weather. Avoid humid or corrosive places and respect the temperatures indicated in the burner data table at the beginning of this manual.

Packing

The burners are dispatched in wooden packages whose dimensions are:
PG30: 1000 x 550 x 460 mm (L x P x H)
PG60: 1200 x 670 x 540 mm (L x P x H)
PG70-PG81: 1280 x 850 x 760 mm (L x P x H)

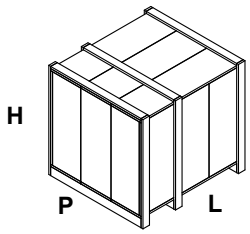

Packing cases of this kind are affected by humidity and are not suitable for stacking. The following are placed in each packing case.

- burner;
- light oil flexible hoses;
- light oil filter;
- gasket to be inserted between the burner and the boiler;
- envelope containing this manual.

To get rid of the burner's packing, follow the procedures laid down by current laws on disposal of materials.

Fitting the burner to the boiler

To install the burner into the boiler, proceed as follows:

1 make a hole on the closing door of the combustion chamber as described on paragraph “Overall dimensions”)
2 place the burner to the boiler: lift it up and handle it according to the procedure described on paragraph “Handling the burner”;
3 place the stud bolts (5) on boiler’s door, according to the burner drilling template described on paragraph “Overall dimensions”;
4 fasten the stud bolts;
5 place the gasket on the burner flange;
6 install the burner into the boiler;
7 fix the burner to the stud bolts, by means of the fixing nuts, according to the next picture.
8 After fitting the burner to the boiler, ensure that the gap between the blast tube and the refractory lining is sealed with appropriate insulating material (ceramic fibre cord or refractory cement).

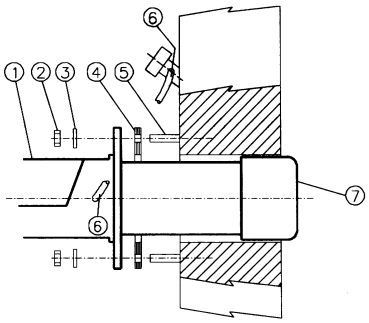

Keys

1 Burner
2 Fixing nut
3 Washer
4 Sealing gasket
5 Stud bolt
7 Blast tube

Handling the burner

ATTENTION! The lhandling operations must be carried out by specialised and trained personnel. If these operations are not carried out correctly, the residual risk for the burner to overturn and fall down still persists.

DANGER! Incorrect motor rotation can seriously damage property and injure people.**To move the burner, use means suitable to support its weight (see paragraph “Technical specifications”).**

Matching the burner to the boiler

The burners described in this manual have been tested with combustion chambers that comply with EN676 regulation and whose dimensions are described in the diagram . In case the burner must be coupled with boilers with a combustion chamber smaller in diameter or shorter than those described in the diagram, please contact the supplier, to verify that a correct matching is possible, with respect of the application involved. To correctly match the burner to the boiler verify the type of the blast tube . Verify the necessary input and the pressure in combustion chamber are included in the burner performance curve; otherwise the choice of the burner must be revised consulting the burner manufacturer. To choose the blast tube lenght follow the instructions of the boiler manufacturer. In absence of these consider the following:

- Cast-iron boilers, three pass flue boilers (with the first pass in the rear part): the blast tube must protrude no more than **Dist** = 100 mm into the combustion chamber. (please see the picture below)
- Pressurised boilers with flame reversal: in this case the blast tube must penetrate **Dm** 50 ÷ 100 mm into combustion chamber in respect to the tube bundle plate.(please see the picture below)

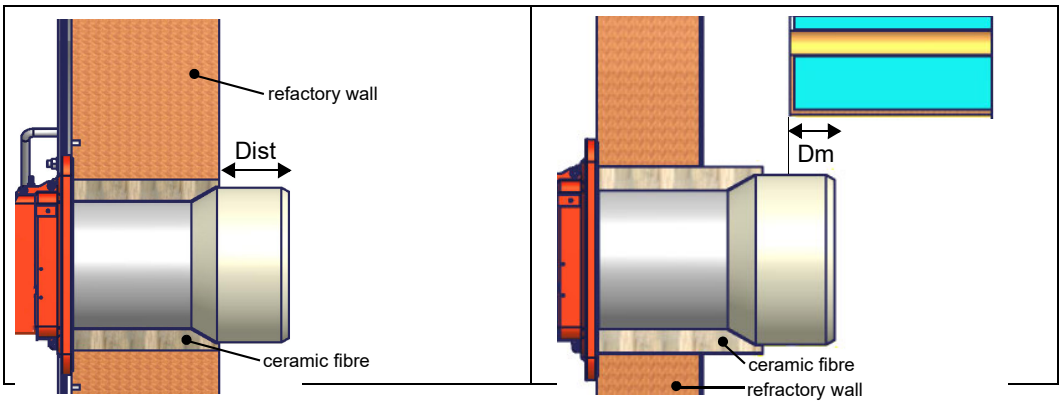

WARNING! Carefully seal the free space between blast tube and the refractory lining with ceramic fibre rope or other suitable means.

The length of the blast tubes does not always allow this requirement to be met, and thus it may be necessary to use a suitably-sized spacer to move the burner backwards or to design a blast tube tha suites the utilisation (please, contact the manifacturer).

OIL TRAIN CONNECTIONS

Hydraulic diagrams for light oil supplying circuits

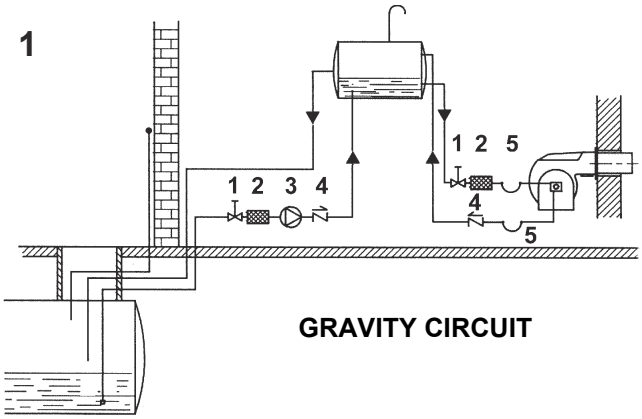

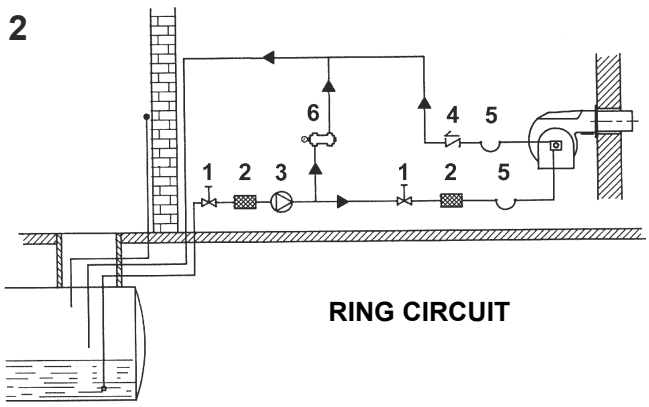

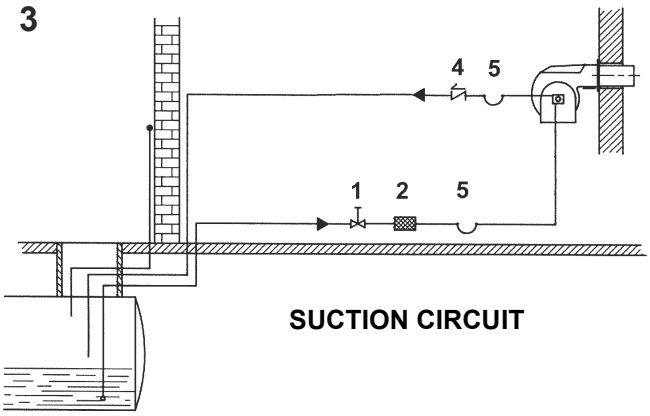

Key

1 Manual valve
2 Light oil filter
3 Light oil feeding pump
4 One way valve
5 Flexible hoses
6 Relief valve

NOTE: in plants where gravity or ring feed systems are provided, install an automatic interception device.

NOTE: in plants where gravity or ring feed systems are provided, install an automatic interception device (see n. 4 -).

Installation diagram of light oil pipes

PLEASE READ CAREFULLY THE "WARNINGS" CHAPTER AT THE BEGINNING OF THIS MANUAL.

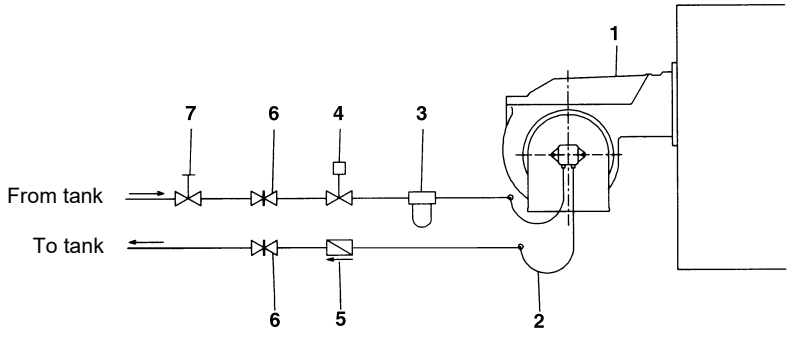

Double-pipe system

The burner is supplied with filter and flexible hoses, all the parts upstream the filter and downstream the return flexible hose, must be installed by the customer. As far as the hoses connection, see the related paragraph.

Key

1 Burner
2 Flexible hoses (fitted)
3 Light oil filter (fitted)
4 Automatic interceptor (*)
5 One-way valve (*)
6 Gate valve
7 Quick-closing gate-valve (outside the tank or boiler rooms)

(*) Only for installations with gravity, siphon or forced circulation feed systems. If the device installed is a solenoid valve, a timer must be installed to delay the valve closing.
The direct connection of the device without a timer may cause pump breaks.

The provided pumps can be installed both into single-pipe and double-pipe systems.

Single-pipe system: a single pipe drives the oil from the tank to the pump's inlet. Then, from the pump, the pressurised oil is driven to the nozzle: a part comes out from the nozzle while the othe part goes back to the pump. In this system, the by-pass plug, if provided, must be removed and the optional return port, on the pump's body, must be sealed by steel plug and washer.

Double-pipe system: as for the single pipe system, a pipe that connects the tank to the pump's inlet is used besides another pipe that connects the pump's return port to the tank, as well. The excess of oil goes back to the tank: this installation can be considered self-bleeding. If provided, the inside by-pass plug must be installed to avoid air and fuel passing through the pump.

Burners are factory-set for double-pipe systems. They can be suited for single-pipe system (recommended in the case of gravity feed) as decribed before.

To change from a 1-pipe system to a 2-pipe-system, insert the by-pass plug **G** (as for ccw-rotation- referring to the pump shaft).

Caution: Changing the direction of rotation, all connections on top and side are reversed.

PG30: Suntec AS57
PG60: Suntec AN67
PG70: Suntec AJ6
PG81: Suntec J6

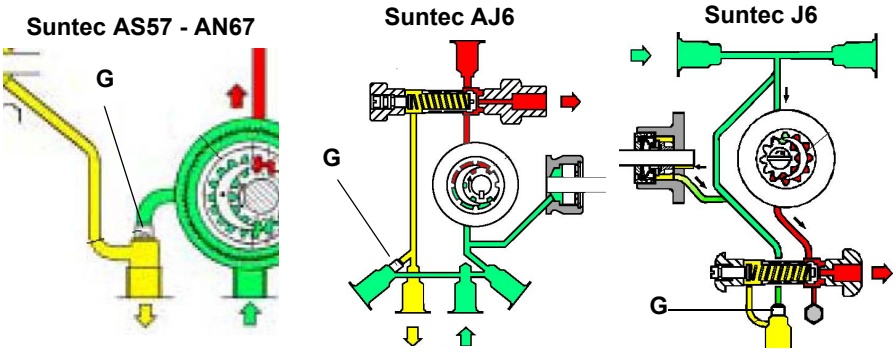

Bleed

Bleeding in two-pipe operation is automatic: it is assured by a bleed flat on the piston. In one-pipe operation, the plug of a pressure gauge port must be loosened until the air is evacuated from the system.

Sizing the pipeline

lSyphon twin pipe feed

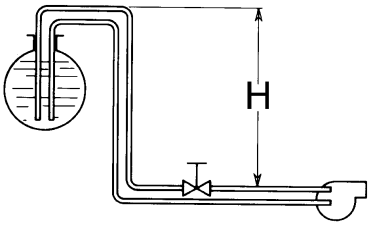

SUNTEC AS57C				
H (m)	L (m)			
	ø6	ø8	ø10	ø12
0	10	37	95	150
0,5	12	42	107	150
1	13	47	118	150
2	19	65	150	150
3	19	65	150	150
4	22	74	150	150

SUNTEC AN67C				
H (m)	L (m)			
	ø10	ø12	ø14	ø16
0	6	27	70	150
0,5	7	31	79	150
1	8	34	87	150
2	13	48	121	150
3	13	48	121	150
4	15	55	138	150

SUNTEC AJ6/J6/E6				
H (m)	L (m)			
	ø10	ø12	ø14	ø16
0	5	13	27	47
0,5	6	15	30	52
1	7	17	33	58
2	9	21	40	70
3	10	24	47	80
4	12	28	53	92

SUNTEC J7CCC/E7				
H (m)	L (m)			
	ø10	ø12	ø14	ø16
0	2	7	16	29
0,5	2	8	18	33
1	3	10	20	37
2	4	12	25	44
3	5	14	29	52
4	6	17	33	59

Twin pipe suction feed

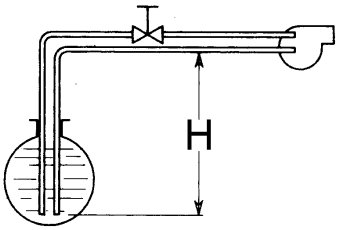

SUNTEC AS57C				
H (m)	L (m)			
	ø6	ø8	ø10	ø12
0	10	37	95	150
0,5	9	33	84	150
1	7	28	73	150
2	4	19	50	107
3	1	10	27	60
4	0	0	5	13

SUNTEC AN67C				
H (m)	L (m)			
	ø10	ø12	ø14	ø16
0	6	27	70	150
0,5	5	23	62	132
1	4	20	53	114
2	2	13	36	79
3	0	6	19	44
4	0	0	2	9

SUNTEC AJ6/J6/E6				
H (m)	L (m)			
	ø10	ø12	ø14	ø16
0	5	13	27	47
0,5	4	12	23	41
1	3	10	20	36
2	2	6	13	24
3	0	3	7	13
4	0	0	0	2

SUNTEC J7CCC/E7				
H (m)	L (m)			
	ø10	ø12	ø14	ø16
0	7	16	29	76
0,5	6	14	26	67
1	5	12	22	58
2	2	7	14	40
3	0	3	7	21
4	0	0	0	3

L= pipeline lenght in meters

About the use of fuel pumps

- Do not use fuel with additives to avoid the possible formation over time of compounds which may deposit between the gear teeth, thus obstructing them.
- After filling the tank, wait before starting the burner. This will give any suspended impurities time to deposit on the bottom of the tank, thus avoiding the possibility that they might be sucked into the pump.
- On initial commissioning a "dry" operation is foreseen for a considerable length of time (for example, when there is a long suction line to bleed). To avoid damages inject some lubrication oil into the vacuum inlet.
- Care must be taken when installing the pump not to force the pump shaft along its axis or laterally to avoid excessive wear on the joint, noise and overloading the gears.
- Pipes should not contain air pockets. Rapid attachment joint should therefore be avoided and threaded or mechanical seal junctions preferred. Junction threads, elbow joints and couplings should be sealed with removable sg component. The number of junctions should be kept to a minimum as they are a possible source of leakage.
- Do not use PTFE tape on the suction and return line pipes to avoid the possibility that particles enter circulation. These could deposit on the pump filter or the nozzle, reducing efficiency. Always use O-Rings or mechanical seal (copper or aluminium gaskets) junctions if possible.
- An external filter should always be installed in the suction line upstream the fuel unit.

***ATTENTION**: before the burner first start, it is mandatory to fill the adduction pipes with diesel fuel and bleed out residual air bubbles. Prior to switching on the burner, check direction of rotation of the pump motor by briefly pressing the starter switch; ensure there are no anomalous sounds during equipment operation, and only then turn on the burner. Neglect to comply with this requirement will invalidate the burner warranty.*

Connecting the light oil flexible hoses

To connect the flexible light oil hoses to the pump, proceed as follows, according to the pump provided:

1 remove the closing nuts **A** and **R** on the inlet and return connections of the pump;

2 screw the rotating nut of the two flexible hoses on the pump **being careful to avoid exchanging the inlet and return lines**: see the arrows marked on the pump that show the inlet and the return (see prevoius paragraph).

Suntec AS57	Suntec AN67	Suntec AJ6	Suntec J6
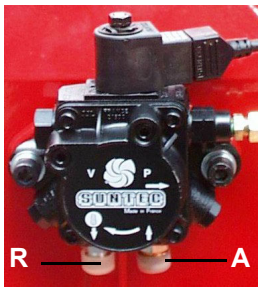	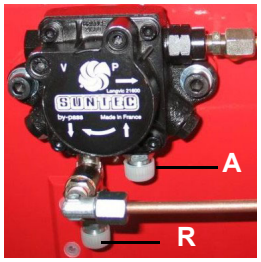	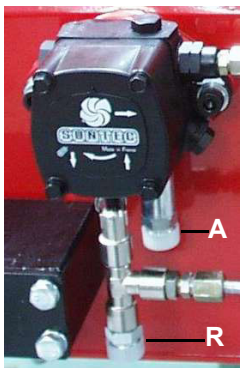	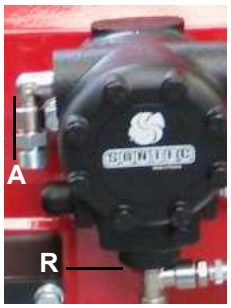

Diesel filters

	Item	Note	Connection	Max. operating pressure	Max. operating temperature	Filtering degree	Protection
6	20201PL (Paper filtering element)	-	3/8”	1 bar	-20, 60 °C	100 µ	-

Light oil pumps

The pumps provided with these burners can be:

- PG30: Suntec AS57
- PG60: Suntec AN67
- PG70: Suntec AJ6
- PG81: Suntec J6

Suntec AS57 C

Oil viscosity	2 - 12 cSt
Oil temperature	0 - 60°C
Max. suction pressure	2 bar
Max. return pressure	2 bar
Min. suction pressure	- 0,45 bar to avoid gasing
Rotation speed	3600 rpm max.

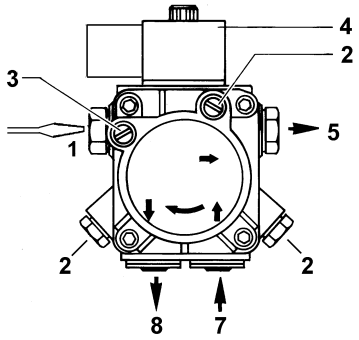

Suntec AN67 C

Oil viscosity	2 - 75 cSt
Oil temperature	0 - 60°C
Max. suction pressure	2 bar
Max. return pressure	2 bar
Min. suction pressure	- 0,45 bar to avoid gasing
Rotation speed	3600 rpm max.

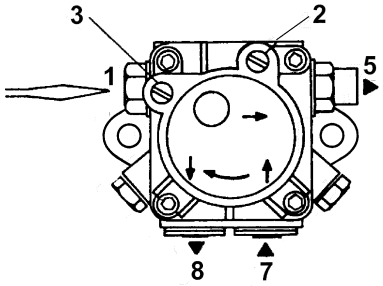

Suntec AJ6	
Viscosity	2 - 75 cSt
Oil temperature	60°C max
Inlet maximum pressure	2 bar
Inlet minimum pressure	- 0.45 bar to avoid gasing
Rated speed	3600 rpm max.

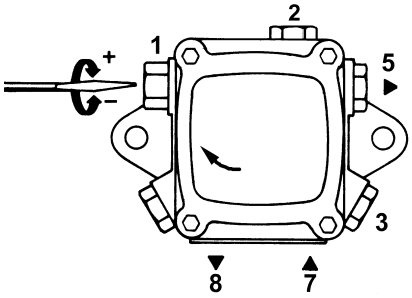

Suntec J6 - J7

Oil viscosity	2.8 - 200 cSt
Oil temperature	0 - 90°C
Min. suction pressure	- 0,45 barto avoid gasing
Max. suction pressure	1.5 bar
Max. return pressure	1.5 bar
Rotation speed	3600 rpm max.

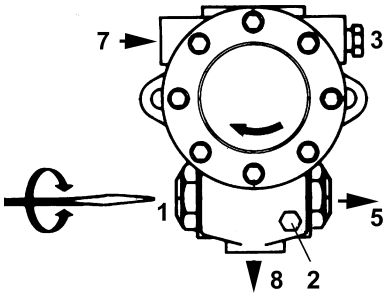

Key

1 Pressure governor
2 Pressure gauge
3 Vacuum gauge
4 Solenoid valve
5 Nozzle
7 Suction
8 Return (by-pass plug inserted)

Electrical connections

⚠	**RESPECT THE BASIC SAFETY RULES. MAKE SURE OF THE CONNECTION TO THE EARTHING SYSTEM. DO NOT REVERSE THE PHASE AND NEUTRAL CONNECTIONS. FIT A DIFFERENTIAL THERMAL MAGNET SWITCH ADEQUATE FOR CONNECTION TO THE MAINS. STRICTLY OBSERVE THE DATA PLATE.**

- Remove the cover from the burner electrical panel.
- Execute the electrical connections to the power supply terminal board as shown, check the direction of the fan-pump motor (see next paragraph) and replace the electrical panel cover.

⚠	**WARNING: The burner is provided with a jumper between terminals 6 and 7; in the event of connecting the high/low flame thermostat remove this jumper before connecting the thermostat.**
	IMPORTANT: while connecting electric supply wires to burner's teminal block be sure that ground wire should be longer than phase and neutral ones.

Burners PG70 - PG81
not fitted with printed circuit

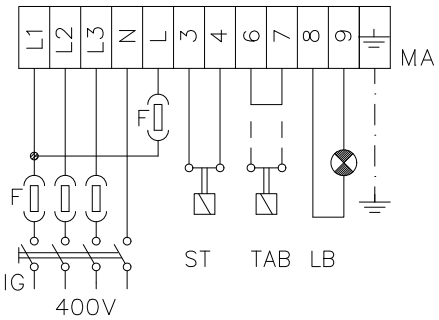

Fig. 2

Burners PG30 - PG60 - PG70 - PG81
fitted with printed circuit

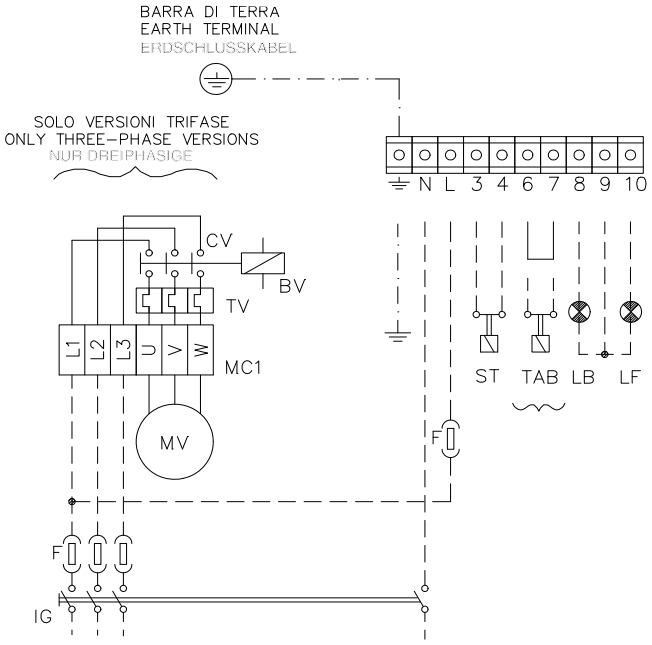

Fig. 3

TERMINAL BLOCK FOR CONNECTION ON PRINTED CIRCUIT - MONOPHASE BURNERS ONLY

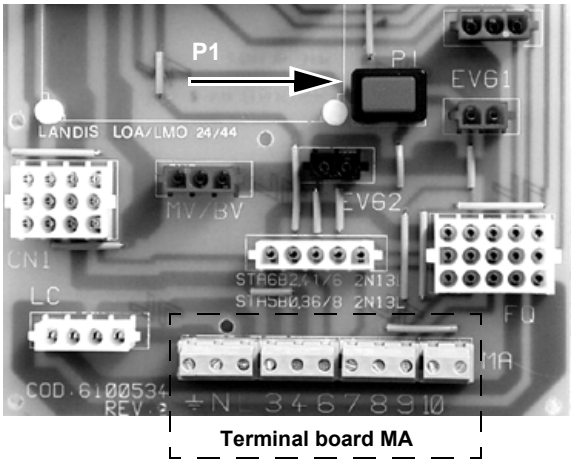

Fig. 5

Power supply terminal board - on triphase burners only

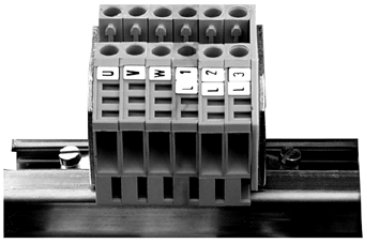

Fig. 4

Fan-pump motor rotation (PG30 excluded)

Once the burner electrical connection is accomplished, remember to check the motor rotation.

Motor must rotate in the direction shown on the casing. In the event of wrong rotation, reverse the three-phase supply and check again the motor rotation.

NOTE: Burners are provided for three-phase 400 V supply, and in the case of three-phase 230 V supply it is necessary to modify the electrical connections inside the terminal box of the electric motor and replace the thermal cutout relay.

ADJUSTMENTS

⚠	***ATTENTION:*** **before starting the burner up, be sure that the manual cutoff valves are open. Be sure that the mains switch is closed.**
	Before starting up the burner, make sure that the return pipe to the tank is not obstructed. Any obstruction would cause the pump seal to break.
	.***ATTENTION:*** During commissioning operations, do not let the burner operate with insufficient air flow (danger of formation of carbon monoxide); if this should happen, make the fuel decrease slowly until the normal combustion values are achieved.

⚠	**IMPORTANT! the combustion air excess must be adjusted according to the in the following chart:**

Recommended combustion parameters		
Fuel	***Recommended (%) CO_2***	***Recommended (%) O_2***
Light oil	11.5 ÷ 13	2.9 ÷ 4.9

Adjusting the fuel flow rate

The fuel rate is setting choosing properly sized nozzles and adjusting the fuel pressure at the pump inlet (see the diagram Fig. 6). To choose the nozzles refer to tables below; for pump pressure regulation see next tables.

⚠ **Note: all pumps are set to 12 bar. The nozzle rate must be higher than the rate referred to the minimum burner output.**

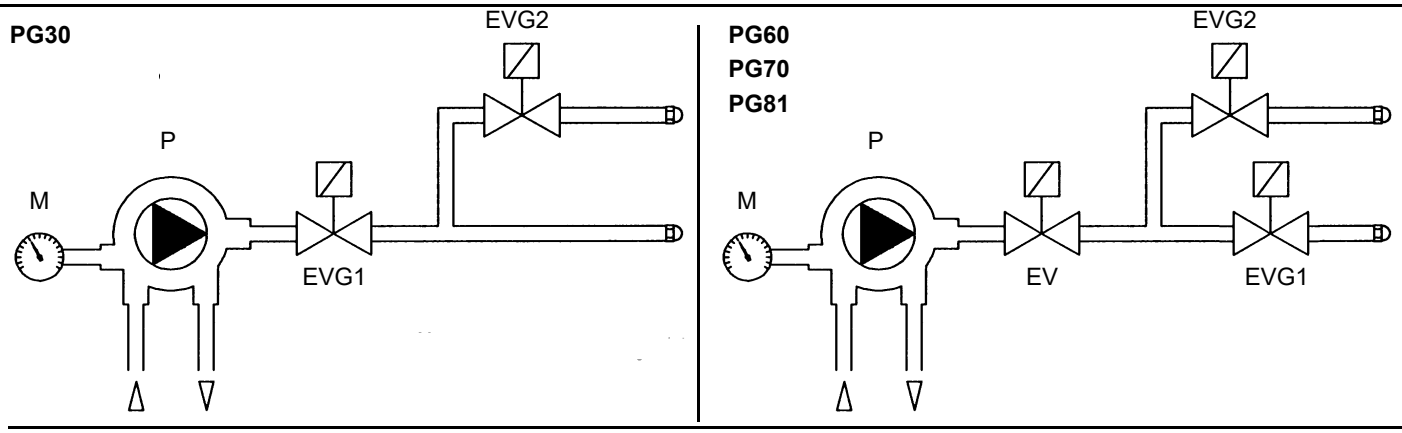

Key

EV	Fuel solenoid valve
EVG1	Fuel solenoid valve - low flame
EVG2	Fuel solenoid valve - high flame
M	Manometer
P	Pump

Fig. 6

Choosing the light oil nozzles

OUTPUT			PUMP PRESSURE (bar)					
			10		12		14	
(kW)	(kCal/h)	(kg/h)	I° **NOZZLE** G.P.H.	II° **NOZZLE** G.P.H.	I° **NOZZLE** G.P.H.	II° **NOZZLE** G.P.H.	I° **NOZZLE** G.P.H.	II° **NOZZLE** G.P.H.
100	86.000	8,4	0,85	1,25	0,80	1,20	0,75	1,10
120	103.200	10,1	1,00	1,50	0,90	1,35	0,90	1,35
140	120.400	11,8	1,20	1,75	1,10	1,65	1,00	1,50
160	137.600	13,5	1,35	2,00	1,25	1,75	1,20	1,75
180	154.800	15,2	1,50	2,25	1,35	2,00	1,35	2,00
200	172.000	16,9	1,75	2,50	1,50	2,25	1,50	2,25
250	215.000	21,1	2,00	3,25	2,00	3,00	1,75	2,75
300	258.000	25,3	2,50	4,00	2,25	3,50	2,25	3,25
350	301.000	29,5	3,00	4,50	2,75	4,00	2,50	3,50
400	344.000	33,7	3,50	5,00	3,00	4,50	3,00	4,50
450	387.000	37,9	4,00	5,50	3,50	5,00	3,25	5,00
500	430.000	42,2	4,00	6,50	4,00	6,00	3,50	5,50
550	473.000	46,4	4,50	7,00	4,00	6,50	4,00	6,00
600	516.000	50,6	5,00	7,50	4,50	7,00	4,50	6,50
650	559.000	54,8	5,50	8,50	5,00	7,50	4,50	7,00
700	602.000	59,0	6,00	9,00	5,50	8,50	5,00	7,50
750	645.000	63,2	6,50	9,50	6,00	9,00	5,50	8,00
800	688.000	67,5	7,00	10,00	6,00	9,50	6,00	9,00
850	731.000	71,7	7,50	11,00	6,50	10,00	6,00	9,50
900	774.000	75,9	7,50	11,00	7,00	10,00	6,50	10,00
950	817.000	80,1	8,00	12,00	7,50	11,00	7,00	10,00
1000	860.000	84,3	8,50	13,00	8,00	12,00	7,50	11,00
1250	1.075.000	105,4	11,00	16,00	10,00	15,00	9,00	14,00
1500	1.290.000	126,5	13,00	19,50	12,00	18,00	11,00	16,00
1750	1.505.000	147,5	15,00	22,00	14,00	20,00	13,00	19,50
2000	1.720.000	168,6	17,00	26,00	16,00	24,00	15,00	22,00

Tab. 1

Oil nozzle flow rates

NOZZLE G.P.H.	PUMP PRESSURE (bar)													NOZZLE G.P.H.
	6	10	11	12	13	14	15	16	17	18	19	20	24	
	(kg/h)													
0,30	0,9	1,1	1,2	1,3	1,3	1,4	1,4	1,5	1,5	1,5	1,6	1,6	1,8	0,30
0,35	1,0	1,3	1,4	1,5	1,5	1,6	1,6	1,7	1,7	1,8	1,8	1,9	2,1	0,35
0,40	1,2	1,5	1,6	1,7	1,7	1,8	1,9	1,9	2,0	2,1	2,1	2,2	2,4	0,40
0,45	1,3	1,7	1,8	1,9	2,0	2,0	2,1	2,2	2,2	2,3	2,4	2,4	2,7	0,45
0,50	1,5	1,9	2,0	2,1	2,2	2,3	2,3	2,4	2,5	2,6	2,6	2,7	3,0	0,50
0,55	1,6	2,1	2,2	2,3	2,4	2,5	2,6	2,7	2,7	2,8	2,9	3,0	3,3	0,55
0,60	1,8	2,3	2,4	2,5	2,6	2,7	2,8	2,9	3,0	3,1	3,2	3,2	3,6	0,60
0,65	1,9	2,5	2,6	2,7	2,8	2,9	3,0	3,1	3,2	3,3	3,4	3,5	3,9	0,65
0,70	2,1	2,7	2,8	2,9	3,1	3,2	3,3	3,4	3,5	3,6	3,7	3,8	4,2	0,70
0,75	2,2	2,9	3,0	3,1	3,3	3,4	3,5	3,6	3,7	3,9	4,0	4,1	4,4	0,75
0,80	2,4	3,1	3,2	3,4	3,5	3,6	3,8	3,9	4,0	4,1	4,2	4,3	4,7	0,80
0,85	2,5	3,3	3,4	3,6	3,7	3,9	4,0	4,1	4,2	4,4	4,5	4,6	5,0	0,85
0,90	2,7	3,4	3,6	3,8	3,9	4,1	4,2	4,4	4,5	4,6	4,8	4,9	5,3	0,90
1,00	3,0	3,8	4,0	4,2	4,4	4,5	4,7	4,8	5,0	5,1	5,3	5,4	5,9	1,00
1,10	3,3	4,2	4,4	4,6	4,8	5,0	5,2	5,3	5,5	5,7	5,8	6,0	6,5	1,10
1,20	3,6	4,6	4,8	5,0	5,2	5,4	5,6	5,8	6,0	6,2	6,3	6,5	7,1	1,20
1,25	3,7	4,8	5,0	5,2	5,5	5,7	5,9	6,1	6,2	6,4	6,6	6,8	7,4	1,25
1,35	4,0	5,2	5,4	5,7	5,9	6,1	6,3	6,5	6,7	6,9	7,1	7,3	8,0	1,35
1,50	4,4	5,7	6,0	6,3	6,5	6,8	7,0	7,3	7,5	7,7	7,9	8,1	8,9	1,50
1,65	4,9	6,3	6,6	6,9	7,2	7,5	7,7	8,0	8,2	8,5	8,7	8,9	9,8	1,65
1,75	5,2	6,7	7,0	7,3	7,6	7,9	8,2	8,5	8,7	9,0	9,2	9,5	10,4	1,75
2,00	5,9	7,7	8,0	8,4	8,7	9,1	9,4	9,7	10,0	10,3	10,6	10,8	11,9	2,00
2,25	6,7	8,6	9,0	9,4	9,8	10,2	10,6	10,9	11,2	11,6	11,9	12,2	13,3	2,25
2,50	7,4	9,6	10,0	10,5	10,9	11,3	11,7	12,1	12,5	12,8	13,2	13,5	14,8	2,50
2,75	8,2	10,5	11,0	11,5	12,0	12,5	12,9	13,3	13,7	14,1	14,5	14,9	16,3	2,75
3,00	8,9	11,5	12,0	12,6	13,1	13,6	14,1	14,5	15,0	15,4	15,8	16,2	17,8	3,00
3,25	9,6	12,4	13,1	13,6	14,2	14,7	15,2	15,7	16,2	16,7	17,2	17,6	19,3	3,25
3,50	10,4	13,4	14,1	14,7	15,3	15,9	16,4	17,0	17,5	18,0	18,5	19,0	20,8	3,50
4,00	11,9	15,3	16,1	16,8	17,5	18,1	18,8	19,4	20,0	20,5	21,1	21,7	23,7	4,00
4,50	13,3	17,2	18,1	18,9	19,6	20,4	21,1	21,8	22,5	23,1	23,8	24,4	26,7	4,50
5,00	14,8	19,1	20,1	21,0	21,8	22,7	23,4	24,2	25,0	25,7	26,4	27,1	29,7	5,00
5,50	16,3	21,1	22,1	23,1	24,0	24,9	25,8	26,6	27,5	28,3	29,0	29,8	32,6	5,50
6,00	17,8	23,0	24,1	25,2	26,2	27,2	28,1	29,1	30,0	30,8	31,7	32,5	35,6	6,00
6,50	19,3	24,9	26,1	27,3	28,4	29,4	30,5	31,5	32,5	33,4	34,3	35,2	38,6	6,50
7,00	20,8	26,8	28,1	29,4	30,6	31,7	32,8	33,9	34,9	36,0	36,9	37,9	41,5	7,00
7,50	22,2	28,7	30,1	31,5	32,7	34,0	35,2	36,3	37,4	38,5	39,6	40,6	44,5	7,50
8,00	23,7	30,6	32,1	33,6	34,9	36,2	37,5	38,7	39,9	41,1	42,2	43,3	47,5	8,00
8,50	25,2	32,5	34,1	35,7	37,1	38,5	39,9	41,2	42,4	43,7	44,9	46,0	50,4	8,50
9,00	26,7	34,5	36,1	37,7	39,3	40,8	42,2	43,6	44,9	46,2	47,5	48,7	53,4	9,00
9,50	28,2	36,4	38,2	39,8	41,5	43,0	44,5	46,0	47,4	48,8	50,1	51,4	56,4	9,50
10,00	29,7	38,3	40,2	41,9	43,7	45,3	46,9	48,4	49,9	51,4	52,8	54,1	59,3	10,00
11,00	32,6	42,1	44,2	46,1	48,0	49,8	51,6	53,3	54,9	56,5	58,1	59,6	65,2	11,00
12,00	35,6	45,9	48,2	50,3	52,4	54,4	56,3	58,1	59,9	61,6	63,3	65,0	71,2	12,00
13,00	38,6	49,8	52,2	54,5	56,8	58,9	61,0	63,0	64,9	66,8	68,6	70,4	77,1	13,00
13,50	40,0	51,7	54,2	56,6	58,9	61,2	63,3	65,4	67,4	69,4	71,3	73,1	80,1	13,50
14,00	41,5	53,6	56,2	58,7	61,1	63,4	65,7	67,8	69,9	71,9	73,9	75,8	83,0	14,00
15,00	44,5	57,4	60,2	62,9	65,5	68,0	70,3	72,6	74,9	77,1	79,2	81,2	89,0	15,00
16,00	47,5	61,3	64,3	67,1	69,9	72,5	75,0	77,5	79,9	82,2	84,4	86,6	94,9	16,00
17,00	50,4	65,1	68,3	71,3	74,2	77,0	79,7	82,3	84,9	87,3	89,7	92,1	100,8	17,00
18,00	53,4	68,9	72,3	75,5	78,6	81,5	84,4	87,2	89,9	92,5	95,0	97,5	106,8	18,00
19,00	56,4	72,7	76,3	79,7	82,9	86,1	89,1	92,0	94,9	97,6	100,3	102,9	112,7	19,00
19,50	57,8	74,7	78,3	81,8	85,1	88,3	91,4	94,4	97,4	100,2	102,9	105,6	115,7	19,50
20,00	59,3	76,6	80,3	83,9	87,3	90,6	93,8	96,9	99,8	102,7	105,6	108,3	118,6	20,00
22,00	65,2	84,2	88,3	92,3	96,0	99,7	103,2	106,6	109,8	113,0	116,1	119,1	130,5	22,00
24,00	71,2	91,9	96,4	100,7	104,8	108,7	112,5	116,2	119,8	123,3	126,7	130,0	142,4	24,00
25,00	74,1	95,7	100,4	104,9	109,1	113,3	117,2	121,1	124,8	128,4	131,9	135,4	148,3	25,00
26,00	77,1	99,6	104,4	109,1	113,5	117,8	121,9	125,9	129,8	133,6	137,2	140,8	154,2	26,00

Tab. 2

⚠	**Prior to start up the burner, make sure that the return pipe to the tank is not obstructed. Any obstruction would cause the pump seal to break.**

- Check that the combustion parameters are in the suggested limits.

Priming the pump and adjustments

PG30

Before carrying out the adjustment it is necessary to start up the fuel pump, proceeding as follows:

1 remove the electric panel cover;

2 remove the solenoid valve coil **B** connector on pump (see picture below) to avoid the light oil to get into the combustion chamber;

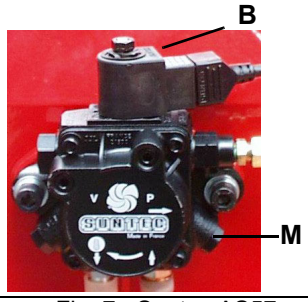

Fig. 7 - Suntec AS57

Fig. 8

3 start the burner up by means of the control panel switch (switch to ON - Fig. 9) and by means of the thermostats\pressure switches series;

4 when the EVG lamp turns to on (see chapter on page 23) remove the photoresistor **FR** (Fig. 8) from its slot and light it up;

5 bleed the air from the **M** pressure gauge port of the pump, slightly loosing the cap and without removing it (Fig. 7);

6 turn the burner off;

7 replace the photoresistor **FR** (Fig. 8) into its slot;

8 reconnect the **B** coil on the pump (Fig. 7);

9 light the burner; if the burner locks, press the unlock pushbutton, placed on the upper side of the burner and repeat the steps above.

10 figurawhen the flame lights up, press the **P1** pushbutton on the PCB (see picture below) for a while to fill the second nozzle pipe;

NOTE: The oil flow rate depends on the choosen nozzle. The air rate can be adjusted by means of the air damper actuator cams (see picture below).

Refer to the next table for cams functions.

Berger STA4.5

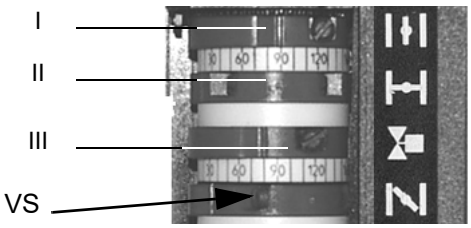

Siemens SQN72

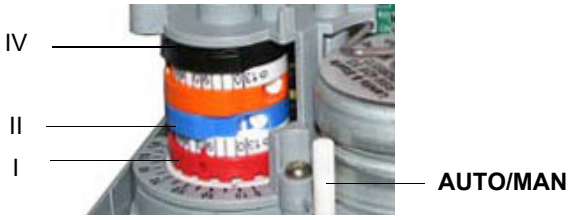

	BERGER STA	Siemens SQN72
”Air adjustment in high flame” cam	I	I (red)
Air adjustment in low flame - Stand-by - Ignition cam	II	II (blue)
Auxiliary cam for the opening consent to the second fuel valve	III	IV (black)

- Berger STA: this actuator is not provided with the manual control of the air damper. The adjustment of the cams is carried out by

means of a screwdriver, by twisting the **VS** screw located inside the cam.

- Siemens SQN72: a key is provided to move cams I and IV, the other cams can be moved by means of screws. On the Siemens actuator the AUTO/MAN mode is provided (see picture).

11 The cam that enables the second stage solenoid valve to open (EVG2 valve) must be set between the other two cams;

12 drive the burner to **high flame** by means of the thermostat **TAB** (if **TAB** is not present, insert a bridge between T6 and T8 contacts on the related connector (see page 15)

13 adjust the high flame air flow rate acting on the related cam, in order to get the right combustion values.

14 drive the burner to **low flame** by means of the thermostat **TAB** (or remove the bridge between T6 and T8 contacts on the related connector (see page 15)

15 adjust the low flame air flow rate acting on the related cam, in order to get the right combustion values.

16 Replace the actuator cover.

PG60-PG70-PG81

1 remove the electric panel cover;

2 prime the oil pump, by means of the related contactor: check the motor rotation and keep pressed for some seconds until the oil circuit is charged

3 bleed the air from the **M** pressure gauge port of the pump (see picture below), loosening the cap without removing it; then release the contactor;

Suntec AJ6	Suntec J6
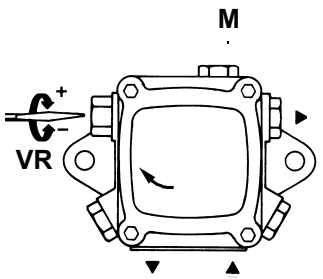	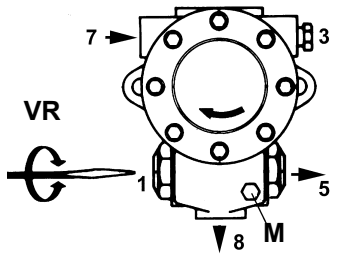

4 Remove the actuator cover.

5 Turn the burner on by means of its main switch **A** (Fig. 9): if the burner locks (LED **B** on in the control panel) press the RESET button (**C**) on the control panel (Fig. 9) - page 23;

6 start the burner up by means of the thermostat series and wait until the pre-purge time comes to an end;

7 Keep the burner to the low flame stage by disconnecting the **TAB** thermostat (remove the bricge between terminals 6 and 7).

8 Proceed as follows acting on the ST1 actuator cam to adjust the air flow rate in the low flame stage, checking the combustion values:

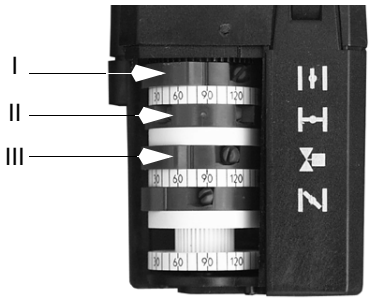

PG60: Berger STA4.5

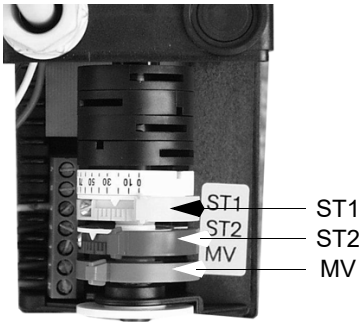

PG70 - PG81: Berger STA6

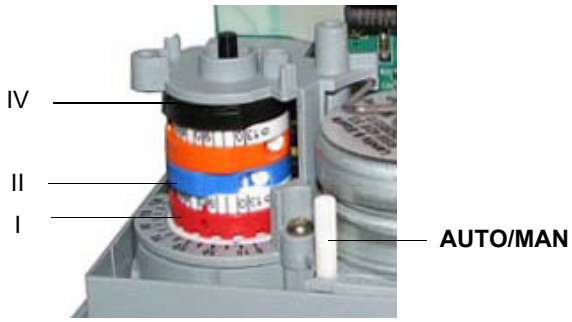

PG60 - PG70 - PG81: Siemens SQN72

Refer to the next table for cams functions.

	BERGER STA4.5	BERGER STA4.5	Siemens SQN72
”Air adjustment in high flame” cam	I	ST2	I (red)
Air adjustment in low flame - Stand-by - Ignition cam	II	ST1	II (blue)
Auxiliary cam for the opening consent to the second fuel valve	III	MV	IV (black)

- Berger STA4: this actuator is not provided with the manual control of the air damper. The adjustment of the cams is carried out by means of a screwdriver, by twisting the **VS** screw located inside the cam.
- Berger STA6: this actuator is not provided with the manual control of the air damper. The adjustment of the cams is carried out by

means of the cam lever

- Siemens SQN72: a key is provided to move cams I and IV, the other cams can be moved by means of screws. On the Siemens actuator the AUTO/MAN mode is provided (see picture).

10 by removing the bridge between the 6 and 7 terminals of the **TAB** thermostat , the actuator moves to the position (degrees) set for the ST1 cam (low flame cam);

11 to decrease the low flame position (and then decrease the opening angle of the actuator), move the cam to a lower position: the actuator will close to the new position of ST1;

12 to increase the low flame position, move the cam higher to the required position, make the bridge between the 6 and 7 terminals only for a while and then remove it immediately: the actuator will move for just few degrees towards the high flame, then it will move down to the new ST1 low flame position;

13 now, charge the oil ciruit of the second nozzle by pressing the P1 button (see next picture);

14 the 3rd cam drives the opening of the 2nd stage solenoid valve (EVG2) and must be set between the other two cams, however near to ST1;

15 The cycle goes on and il the thermostat **TAB** is connected, the control box drives the burner to high flame. If there is not theTAB thermostat, place a bridge between terminals 6 and 7 on the MA terminal block (see picture above).

16 By means of ST2 cam, adjust the air flow rate in high flame stage;

17 to increase the high flame position (and consequently to increase the degrees), move the cam to a higher position: the actuator will move to the new ST2 position;

18 to decrease the high flame position, move the cam to a lower position, remove the bridge between 6 and 7 terminals only for a while, then replace it: the actuator will shift just few degrees towards the low flame position and then will move to the new high flame position.

19 Once the adjustmet is performed, check again that the combustion parameters are in the set limits.

20 Replace the actuator cover.

Adjustments for burners with hydraulic ram

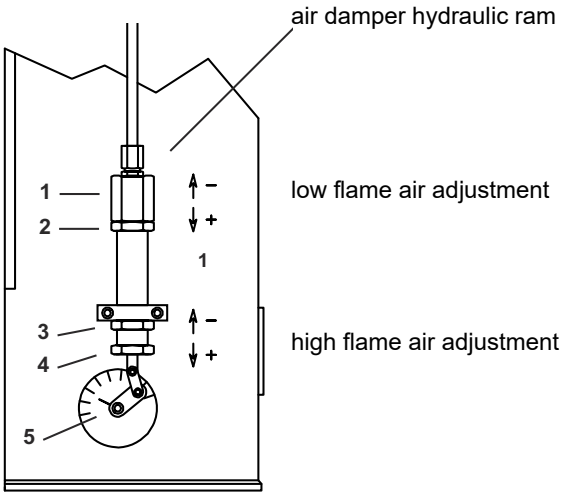

Air setting (The low flame air setting must be carried out first)

a) Low fire setting :

To set the low flame, proceed as follow.

1 Break off the contact of the second stage regulator, unscrew the locking nut (2) and turn directly the body of the air damper ram (**1**).

2 Turn clockwise to increase the air flow of the low flame stage; turn counterclockwise to decrease the air flow.

3 The air damper index (**5**) shows the damper positioning.

4 At the end of settings, lock again the nut (**2**).

b) High flame setting

To set the high flame, proceed as follow.

1 Close the contact of the second stage regulator and unlock the nut (**3**); turn the nut (**4**).

2 Turning counterclockwise the high flame air flow increases, turning clockwise the air flow decreases.

3 The air damper index (**5**) shows teh damper positioning.

4 At the end of settings, lock again the nut (**3**).

NOTICE: during the point b regulations, the point a remains unchanged.

WARNING: for operation with hydraulic damper ram, the pump must not be set to a pressure lower than 12 bar.

Adjusting the combustion head

To let the burner operate at a lower output, turn clockwise the **VRT** screw and move progressively the combustion head back towards the MIN position.

.

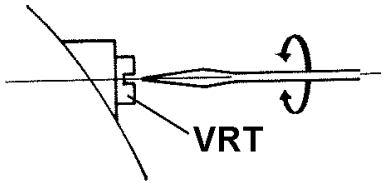

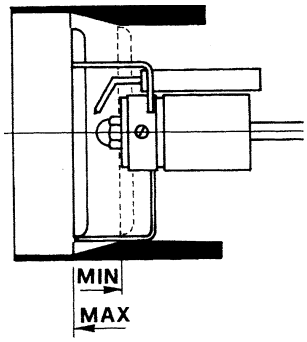

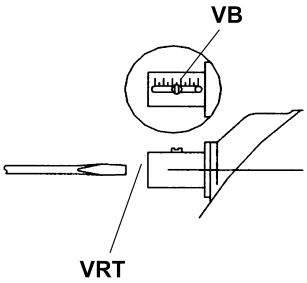

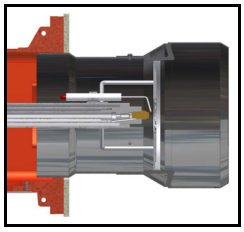

”MIN” position

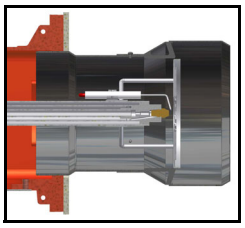

”MAX” position

Note: loosen VB screw to free the VRT screw; adjust the head and then remember to fasten VB again.

Attention! if it is necessary to change the head position, repeat the air and gas adjustments described above.

Calibration of air pressure switch (when provided)

To calibrate the air pressure switch, proceed as follows:

- Remove the transparent plastic cap.
- Once air and gas setting have been accomplished, startup the burner.
- During the pre-purge phase o the operation, turn slowly the adjusting ring nut **VR** in the clockwise direction (to increase the adjusting pressure) until the burner locks out, then read the value on the pressure switch scale and set it to a value reduced by 15%.
- Repeat the ignition cycle of the burner and check it runs properly.
- Refit the transparent plastic cover on the pressure switch.

PART III: OPERATION

LIMITATIONS OF USE

THE BURNER IS AN APPLIANCE DESIGNED AND CONSTRUCTED TO OPERATE ONLY AFTER BEING CORRECTLY CONNECTED TO A HEAT GENERATOR (E.G. BOILER, HOT AIR GENERATOR, FURNACE, ETC.), ANY OTHER USE IS TO BE CONSIDERED IMPROPER AND THEREFORE DANGEROUS.

THE USER MUST GUARANTEE THE CORRECT FITTING OF THE APPLIANCE, ENTRUSTING THE INSTALLATION OF IT TO QUALIFIED PERSONNEL AND HAVING THE FIRST COMMISSIONING OF IT CARRIED OUT BY A SERVICE CENTRE AUTHORISED BY THE COMPANY MANUFACTURING THE BURNER.

A FUNDAMENTAL FACTOR IN THIS RESPECT IS THE ELECTRICAL CONNECTION TO THE GENERATOR'S CONTROL AND SAFETY UNITS (CONTROL THERMOSTAT, SAFETY, ETC.) WHICH GUARANTEES CORRECT AND SAFE FUNCTIONING OF THE BURNER.

THEREFORE, ANY OPERATION OF THE APPLIANCE MUST BE PREVENTED WHICH DEPARTS FROM THE INSTALLATION OPERATIONS OR WHICH HAPPENS AFTER TOTAL OR PARTIAL TAMPERING WITH THESE (E.G. DISCONNECTION, EVEN PARTIAL, OF THE ELECTRICAL LEADS, OPENING THE GENERATOR DOOR, DISMANTLING OF PART OF THE BURNER).

NEVER OPEN OR DISMANTLE ANY COMPONENT OF THE MACHINE.

OPERATE ONLY THE MAIN SWITCH, WHICH THROUGH ITS EASY ACCESSIBILITY AND RAPIDITY OF OPERATION ALSO FUNCTIONS AS AN EMERGENCY SWITCH, AND ON THE RESET BUTTON.

IN CASE OF A BURNER SHUT-DOWN, RESET THE CONTROL BOX BY MEANS OF THE RESET PUSHBUTTON. IF A SECOND SHUT-DOWN TAKES PLACE, CALL THE TECHNICAL SERVICE, WITHOUT TRYING TO RESET FURTHER.

WARNING: DURING NORMAL OPERATION THE PARTS OF THE BURNER NEAREST TO THE GENERATOR (COUPLING FLANGE) CAN BECOME VERY HOT, AVOID TOUCHING THEM SO AS NOT TO GET BURNT.

OPERATION

⚠	***ATTENTION:*** **before starting the burner up, be sure that the manual cutoff valves are open. Be sure themains switch is closed. Read carefully th "Warnings" chapter.**

- Turn the switch A on the burner control panel to the ON position.
- Check the control box is not locked (LED B on), in this case press the reset button accessible from the upper side of the electrical board (see next picture) or the pushbutton C on the frontal panel of the electrical board.
- Check the thermostats (or pressure switches) enable the burner to operate.
- The burner start up cycle begins: the contrl box activates the burner fan and meanwhile the ignition transformer (signalled by the light H on the front panel); pre-purgephase lasts some seconds according to the control box type provided with the burner.
- At the end of pre-purgue time, the first stage solenoid valve EV1 is energised, indicated by the LED D on the display panel and the burner lights.
- The ignition transformer remains on for some seconds after the flame is lit (post ignition time), after this time it is cut out and the light H tunrs off.
- The burner is on in the low flame stage (led G on); after 5 - 15 sec. (according to the control box type), it goes into the two-stage mode and turns automatically to high flame or remains in low flame, according to the system demands. High or low flame operation is shown by the light F (high flame) or light G (low flame). The light E is on when the solenoid valve of the high flame is open, feeding the nozzle of the second stage.

Burner control panel

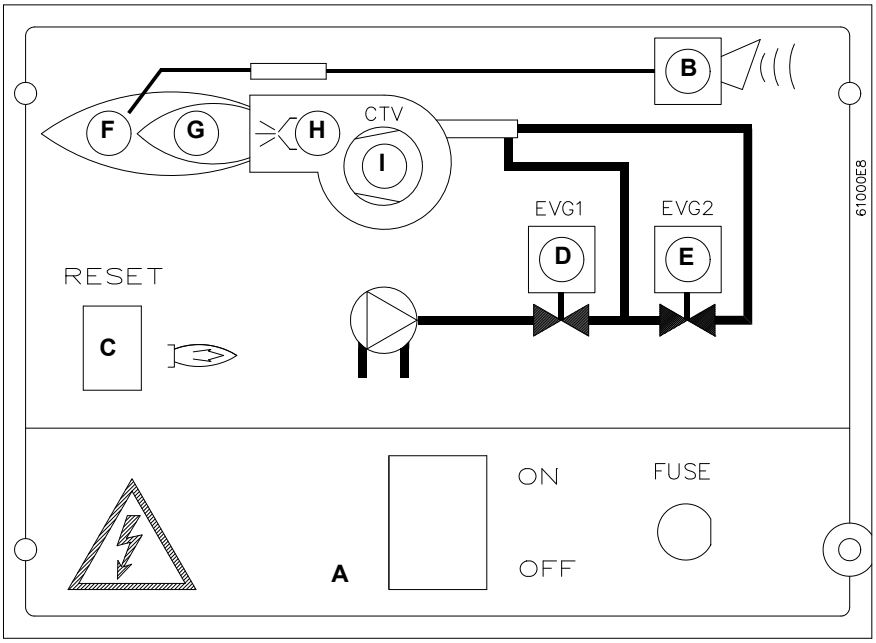

Fig. 9

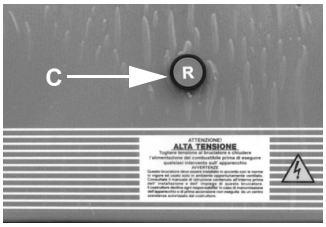

Fig. 10 - Reset pushbutton (version with control box without remote reset)

Keys

A Main switch
B Burner lockout light
C Reset button for flame control device (only burners fitted with remote reset for flame control device)
D Signalling light of the opening of 1st stage solenoid valve
E Signalling light of the opening of 2nd stage solenoid valve
F High flame operation signalling light
G Low flame operation signalling light
H Ignition transformer in operation signalling light
I Overload tripped signalling light (PG30 excluded)

PART III: MAINTENANCE

At least once a year carry out the maintenance operations listed below. In the case of seasonal servicing, it is recommended to carry out the maintenance at the end of each heating season; in the case of continuous operation the maintenance is carried out every 6 months.

WARNING: ALL OPERATIONS ON THE BURNER MUST BE CARRIED OUT WITH THE MAINS DISCONNECTED AND THE FUEL MANAUL CUTOFF VALVES CLOSED!
ATTENTION: READ CAREFULLY THE "WARNINGS" CHAPTER AT THE BEGINNIG OF THIS MANUAL.

ROUTINE MAINTENANCE

- Check and clean the cartdrige of the fuel filter, replace it if necessary (see next paragraph);
- carefully check the fuel flexible hoses for leaks;
- check and clean the filter on the fuel pump: bilter must be thoroughly cleaned at least once in a season to ensure correct working of the fuel unit. To remove the filter, unscrew the four screws on the cover. When reassemble, make sure that the filter is mounted with the feet toward the pump body. If the gasket between cover and pump housing should be damaged, it must be replaced;
- remove, check and clean the combustion head (page 26); when reassembling, carefully observe the measures on page 26;
- check the ignition electrodes and their ceramic insulators, clean, adjust and replace if necessary;
- remove and clean the oil nozzles (IMPORTANT: do not clean the nozzles using metallic or sharp utensils, use only solvents or steam); at the end of maintenance operations, refit the burner, turn it on and check the combustion. If in doubt, replace the defective nozzle/s. In case of intensive use of the burner, the nozzles must be replaced at the end of the working season;
- check and carefully clean the flame detection photoresistor, if necessary replace it and, if in doubt, check the detection current following the diagram on page 27;
- clean and grease levers and rotating parts.

Thecnical procedure of self cleaning filters substitution (valid for all models)

1 Close the bowl valve before the self cleaning filter
2 Switch off any electrical equipment on board on the filter (example motorization or heaters)

WARNING! Drain the system by unscrewing the drain screw on the bottom of the self cleaning filter

3 Disconnect the outlet pipe from the cover of the self cleaning filter
4 Remove the cover with all the filter pack, leaving only the bowl on the line
5 Clean any residue on the bottom of the bowl and clean the seat of the O-ring seal

WARNING! Replace the O-ring seal between the bowl and cover

6 Insert the filter pack again making sure to respect the correct inlet/outlet direction or any references on the cover and tray
7 Replace the filter by following the reverse order operations
8 Make sure there is no leakage and give the power to any electrical equipmente on the filter

Removing the combustion head and the oil gun

1 Remove the top cover **C**;
2 remove the photoresistor from its seat;
3 unscrew the revolving connectors (**E** in figure) on the fuel pipes (use 2 spanners to avoid loosening the connections attached to the distributor block);
4 loosen **VRT** screw to free the threaded rod **AR**, then screw out the 2 screws **V** holding the washer **R** and the screw **VRT** again;
5 remove the whole assembly as shown in figure;
6 clean the combustion head and the oil gun by means of a vacuum cleaner; to scrape off the scale use a metallic brush.

Note: to replace the combustion head reverse the procedure described above.

Correct position of electrodes and combustion head

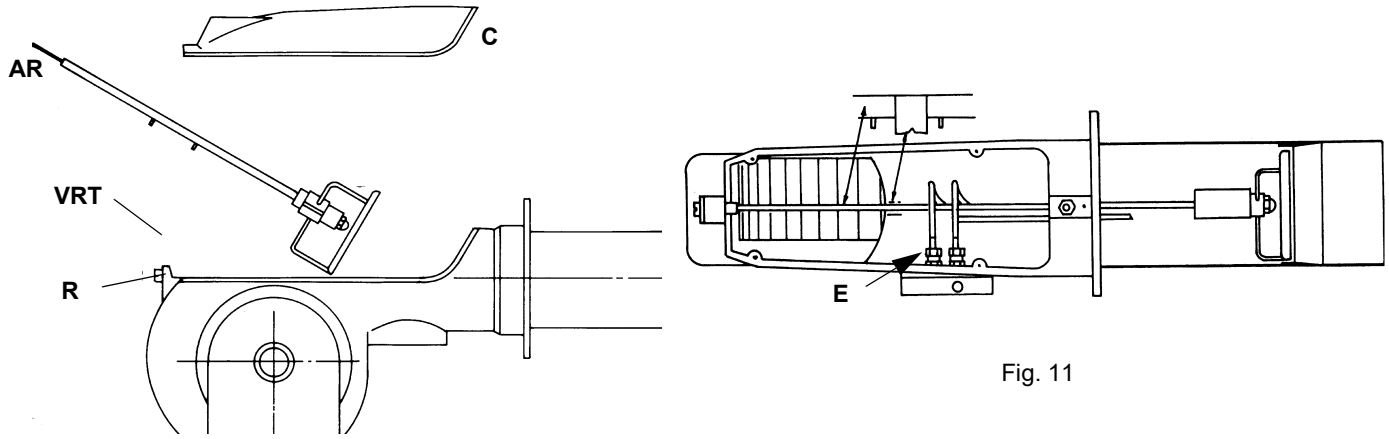

Fig. 11

ATTENTION: avoid the electrodes to get in touch with metallic parts (blast tube, head, etc.), otherwise the boiler operation would be compromised. Check the electrodes position after any intervention on the combustion head.

To guarantee a good ignition the measures showed on the next picture Fig. 12 must be observed.
Be sure to tight the screw on the electrodes group before reassembling the combustion head.

A 9 ÷ 11 mm
B 3 ÷ 4 mm
C 8,5 mm
D 3 mm

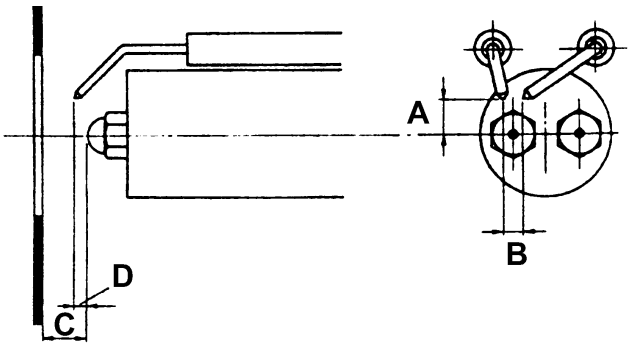

Fig. 12

Checking the detection current

To measure the detection signal follow the diagram on the next picture.
If the signal is not in the advised range, check the electrical contacts, the cleaning of the combustion head, the position of the photoresistor and if necessary replace it.

Control box	Flame sensor	Minimum detection signal
LMO44	QRB4	45μA
LAL2..	QRB1	95μA

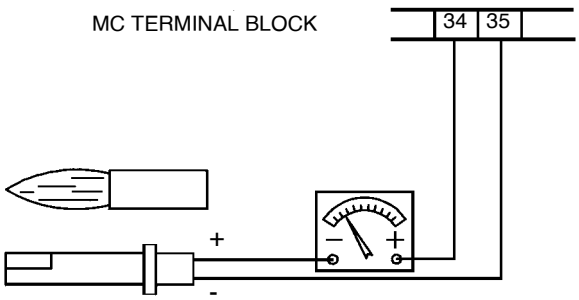

Replacing the ignition electrodes

ATTENTION: avoid the electrodes to get in touch with metallic parts (blast tube, head, etc.), otherwise the boiler operation would be compromised. Check the electrodes position after any intervention on the combustion head.

To replace the ignition electrodes, proceed as follows:

1 remove the burner cover;
2 disconnect the electrodes cables;
3 remove the combustion head (see par. “Removing the combustion head”);
4 loose screw that fasten the ignition electrodes;
5 remove the electrodes and replace them, referring to the values quoted on Fig. 12.

Cleaning and replacing the detection photoresistor

To clean/replace the photoresistor, proceed as follows:

1 disconnect the system from the electrical power supply;
2 shut off the fuel supply;
3 remove the photoresistor from its slot;
4 clean it using a clean cloth; do not use any burner cleansing sprays;
5 if necessary, replace it;
6 insert the photoresistor into its slot.

Checking the detection current

To measure the detection signal follow the diagram on the next picture.
If the signal is not in the advised range, check the electrical contacts, the cleaning of the combustion head, the position of the photoresistor and if necessary replace it.

Control box	Flame sensor	Minimum detection signal
LMO24-44	QRB4	45μA

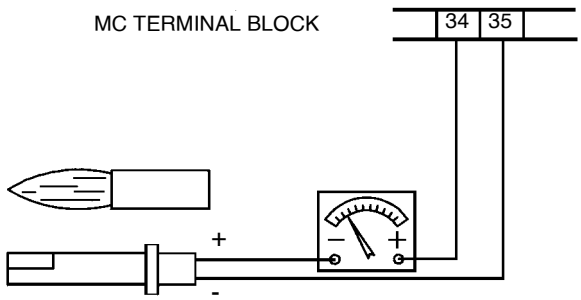

Fig. 13

Burner service term

- In optimal operating conditions, and with preventive maintenance, the burner can last up to 20 years.
- Upon expiry of the burner service term, it is necessary to carry out a technical diagnosis and, if necessary, an overall repair.
- The burner status is considered to be at its limit if it is technically impossible to continue using it due to non-compliance with safety requirements or a decrease in performance.
- The owner makes the decision whether to finish using the burner, or replacing and disposing of it based on the actual state of the appliance and any repair costs.
- The use of the burner for other purposes after the expiry of the terms of use is strictly prohibited.

Seasonal stop

To stop the burner in the seasonal stop, proceed as follows:

1 turn the burner’s main switch to 0 (Off position)
2 disconnect the power mains
3 close the fuel manual valve of the supply line

Burner disposal

In case of disposal, follow the instructions according to the laws in force in your country about the “Disposal of materials”.

TROUBLESHOOTING

	THE BURNER DOESN'T START	THE BURNER REPEATS PRE-PURGE	NOISY FUEL PUMP	THE BURNER DOESN'T START AND STOPS	THE BURNER STARTS AND STOPS	THE BURNER DOESN'T SWITCH TO HIGH FLAME	THE BURNER STOPS DURING OPERATION	THE BURNER STOPS AND REPEATS THE CYCLE DURING OPE-RATION
MAIN SWITCH OPEN	●							
LINE FUSE INTERVENTION	●							
MAX. PRESSURE SWITCH FAULT	●							●
FAN THERMAL CUTOUT INTERVENTION	●							
AUXILIARY RELAIS FUSES INTERVENTION	●							
CONTROL BOX FAULT	●	●		●	●		●	
ACTUATOR FAULT						●		
SMOKEY FLAME					●		●	
IGNITION TRANSFORMER FAULT				●				
IGNITION ELECTRODE DIRTY OR WRONG POSITIONED				●				
DIRTY NOZZLE				●			●	
FUEL SOLENOID VALVE DEFECTIVE				●			●	
PHOTORESISTOR DIRTY OR DEFECTIVE					●		●	
HI-LO FLAME THERMOSTAT DEFECTIVE						●		
WRONG POSITION OF ACTUATOR CAMS						●		
FUEL PRESSURE TOO LOW				●				
DIRTY FUEL FILTERS			●	●			●	

ELECTRICAL WIRING DIAGRAMS

Wiring diagram 07-348

BV	Fan motor contactor coil
CTV	Fan motor thermal cutout terminals
CV	Fan motor contactor terminals
EVG1	Solenoid valve 1st stage
EVG2	Solenoid valve 2nd stage
F	Fuses
FR	Photoresistor
IG	Main switch
IL	Auxiliaries line switch
L	Phase
LAF	Burner in high flame signaling lamp
LB	Flame lockout signaling lamp
LBF	Burner in low flame signaling lamp
LEVG1	Opening of solenoid valve EVG1 signaling lamp
LEVG2	Opening of solenoid valve EVG2 signaling lamp
LOA44	SIEMENS control box
LMO44	SIEMENS control box
LT	Fan motor thermal cutout signaling lamp
LTA	Ignition transformer in operation signaling light
MA	Burner supply terminal board
MC	Burner components connection terminal block
MV	Fan motor
N	Neutral
PI	Priming pushbutton 2nd nozzle
PS	Flame reset (after lockout) pushbutton
ST	Thermostats or pressure switches group
STA/SQN	Actuator for air damper
TA	Ignition transformer
TAB	High-low flame thermostat (if fitted remove the bridge between terminals 6 and 7 on terminal board MA)
TV	Fan motor thermal cutout

ATTENTION:

1 - Electric supply 400V 50Hz 3N a.c.

2 - Don't reverse phase and neutral

3 - Make sure that the burner is properly hearted

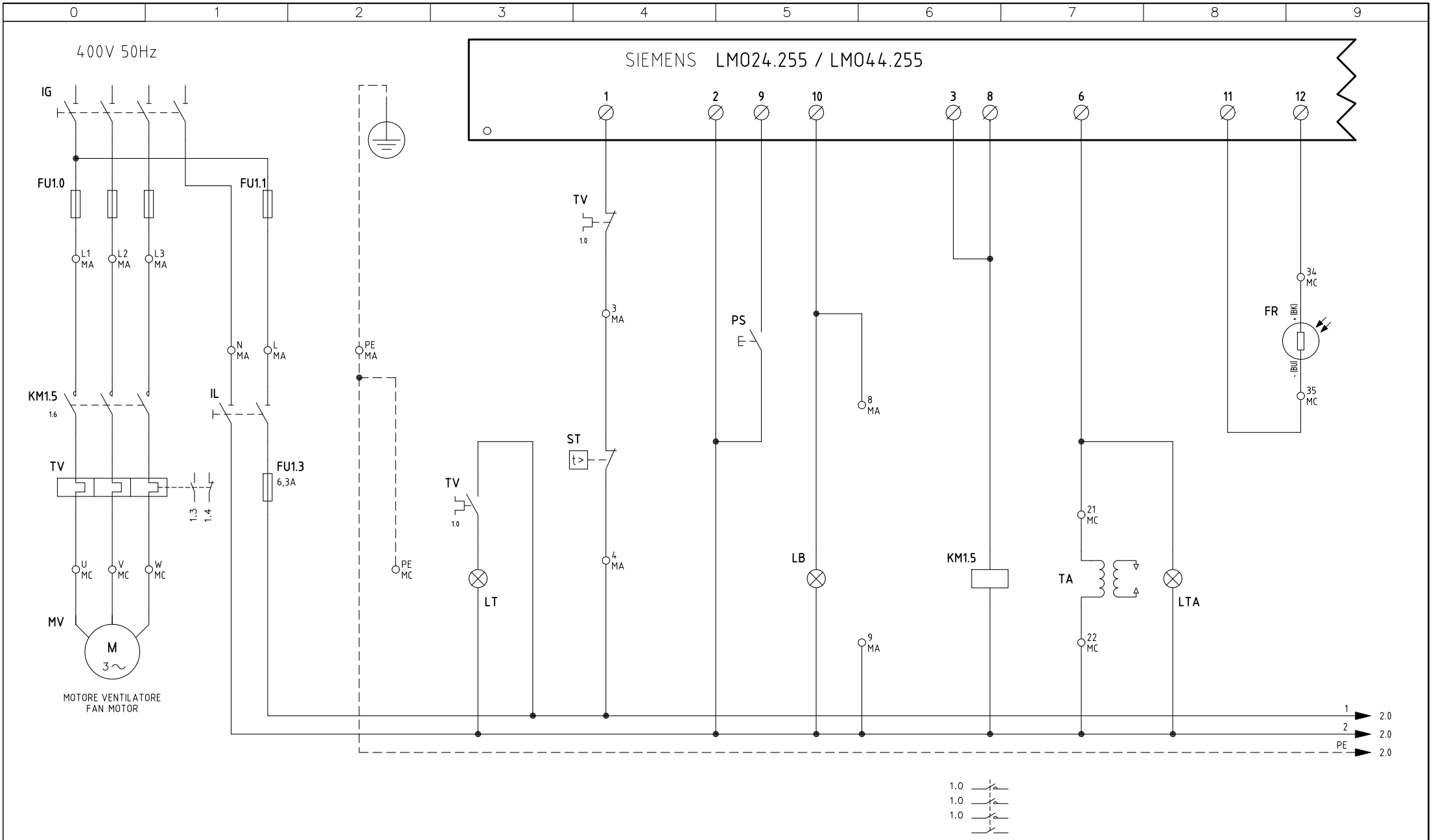

Data 29/10/1996		PREC.	FOGLIO
Revisione 05		/	1
Dis. N. 07 – 348		SEGUE	TOTALE
		2	4

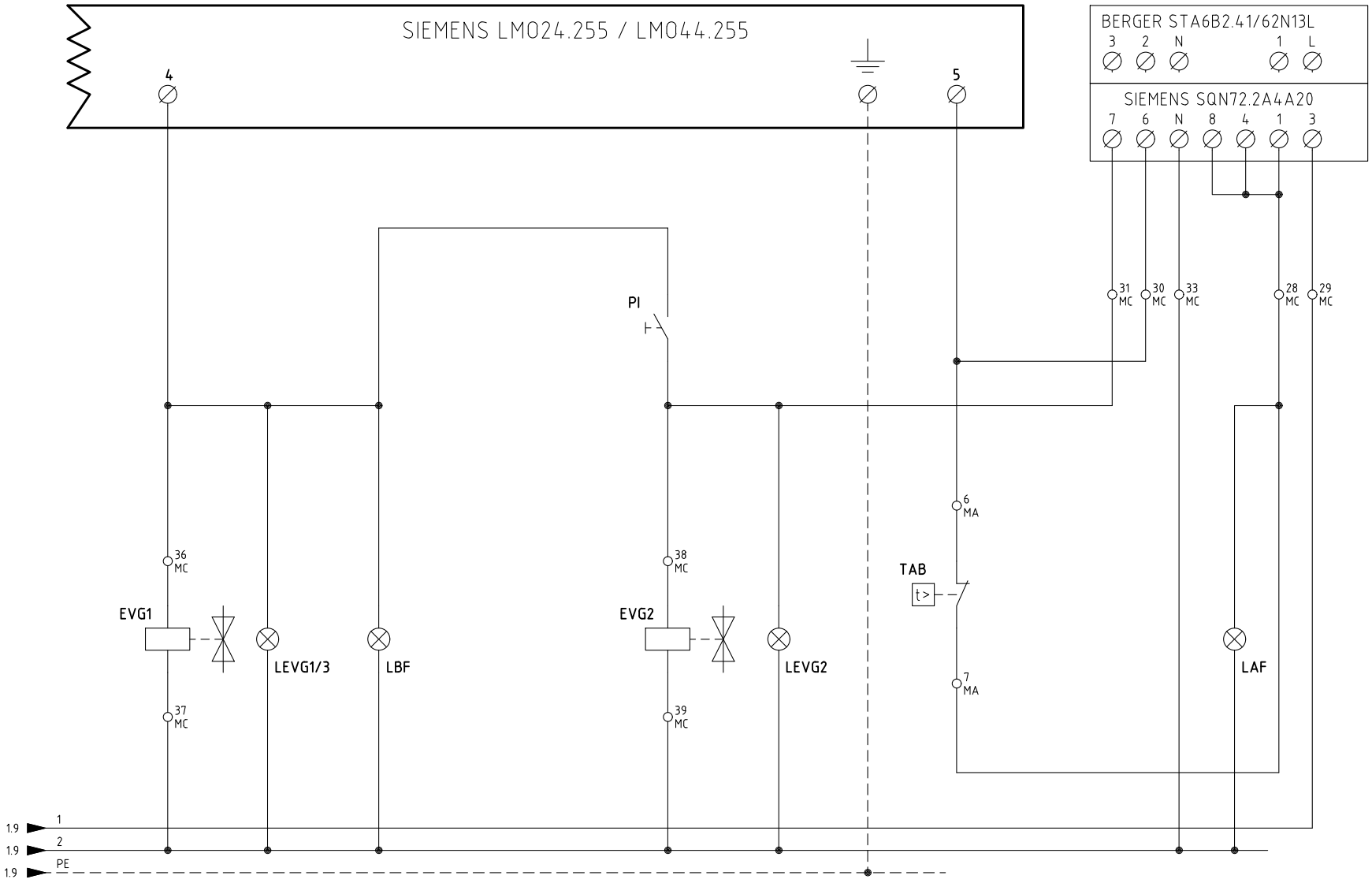

Data 29/10/1996		PREC.	FOGLIO
Revisione 05		1	2
Dis. N. 07 – 348		SEGUE	TOTALE
		3	4

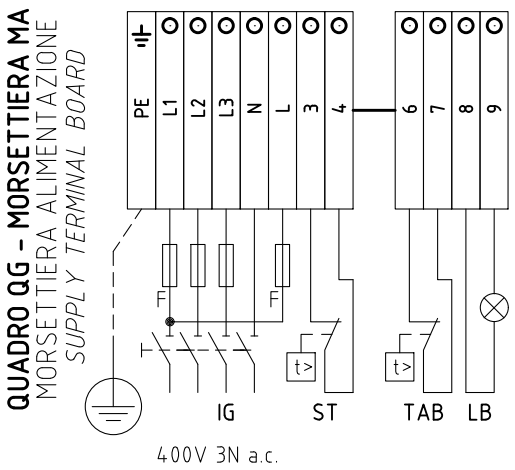

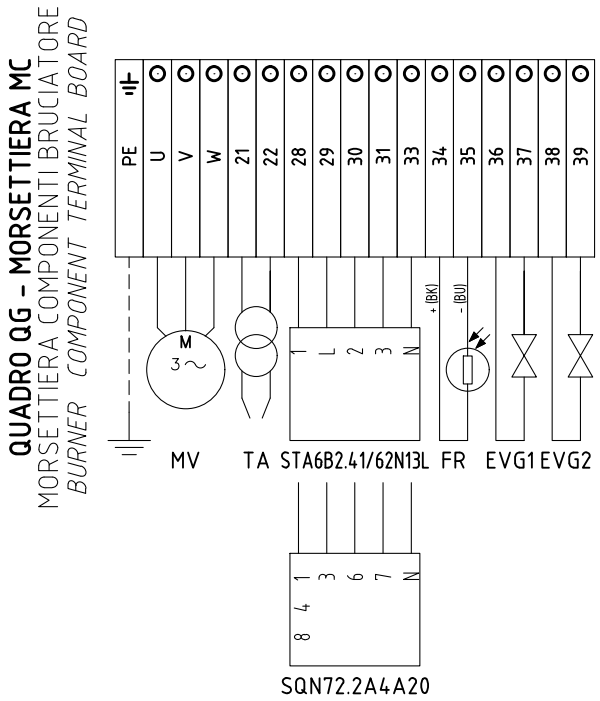

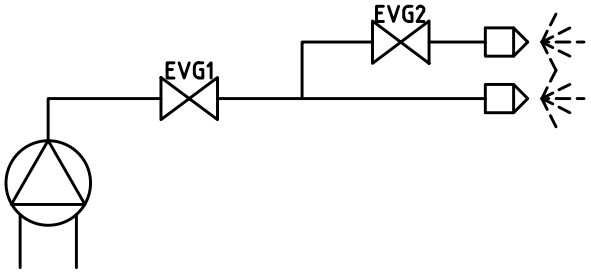

SERVOCOMANDO SERRANDA ARIA

AIR DAMPER ACTUATOR

BERGER STA6B2.41/62N13L

ST2	ALTA FIAMMA *HIGH FLAME*
ST1	SOSTA E BASSA FIAMMA *STAND-BY AND LOW FLAME*
MV	APERTURA EVG2 *OPEN EVG2*

SERVOCOMANDO SERRANDA ARIA (ALTERNATIVO)

AIR DAMPER ACTUATOR (ALTERNATIVE)

SIEMENS SQN72.2A4A20

I (ROSSO) *I (RED)*	ALTA FIAMMA *HIGH FLAME*
II (BLU) *II (BLUE)*	SOSTA E BASSA FIAMMA *STAND-BY AND LOW FLAME*
IV (NERO) *IV (BLACK)*	APERTURA EVG2 *OPEN EVG2*

Data 29/10/1996		PREC.	FOGLIO
Revisione 05		2	3
Dis. N. 07 – 348		SEGUE	TOTALE
		4	4

0	1	2	3	4	5	6	7	8	9

SIGLA/ITEM	FOGLIO/SHEET	Funzione	FUNCTION
BERGER STA6B2.41/62N13L	2	SERVOCOMANDO SERRANDA ARIA	AIR DAMPER ACTUATOR
EVG1	2	ELETTROVALVOLA GASOLIO DI SICUREZZA	SAFETY LIGHT OIL SOLENOID VALVE
EVG2	2	ELETTROVALVOLA GASOLIO ALTA FIAMMA	HIGH FLAME LIGHT OIL SOLENOID VALVE
FR	1	FOTORESISTENZA RILEVAZIONE FIAMMA	PHOTORESISTOR FLAME DETECTOR
FU1.0	1	FUSIBILI DI LINEA	LINE FUSES
FU1.1	1	FUSIBILE DI LINEA	LINE FUSE
FU1.3	1	FUSIBILE LINEA AUSILIARI	AUXILIARY LINE FUSE
IG	1	INTERRUTTORE GENERALE	MAINS SWITCH
IL	1	INTERRUTTORE LINEA AUSILIARI	AUXILIARY LINE SWITCH
KM1.5	1	CONTATTORE MOTORE VENTILATORE	FAN MOTOR CONTACTOR
LAF	2	LAMPADA SEGNALAZIONE ALTA FIAMMA BRUCIATORE	BURNER IN HIGH FLAME INDICATOR LIGHT
LB	1	LAMPADA SEGNALAZIONE BLOCCO FIAMMA	BURNER LOCK-OUT INDICATOR LIGHT
LBF	2	LAMPADA SEGNALAZIONE BASSA FIAMMA BRUCIATORE	BURNER IN LOW FLAME INDICATOR LIGHT
LEVG1/3	2	LAMPADA SEGNALAZIONE APERTURA [EVG1/3]	INDICATOR LIGHT FOR OPENING OF ELECTRO-VALVE [EVG1/3]
LEVG2	2	LAMPADA SEGNALAZIONE APERTURA [EVG2]	INDICATOR LIGHT FOR OPENING OF ELECTRO-VALVE [EVG2]
LMO24.255 / LMO44.255	1	APPARECCHIATURA CONTROLLO FIAMMA	CONTROL BOX
LT	1	LAMPADA SEGNALAZIONE BLOCCO TERMICO MOTORE VENTILATORE	INDICATOR LIGHT FOR FAN MOTOR OVERLOAD THERMAL CUTOUT
LTA	1	LAMPADA SEGNALAZIONE TRASFORMATORE DI ACCENSIONE	IGNITION TRANSFORMER INDICATOR LIGHT
MV	1	MOTORE VENTILATORE	FAN MOTOR
PI	2	PULSANTE INNESCO SECONDO STADIO BRUCIATORE	II° STAGE BURNER START BUTTON
PS	1	PULSANTE SBLOCCO FIAMMA	FLAME UNLOCK BUTTON
SIEMENS SQN72.2A4A20	2	SERVOCOMANDO SERRANDA ARIA (ALTERNATIVO)	AIR DAMPER ACTUATOR (ALTERNATIVE)
ST	1	SERIE TERMOSTATI/PRESSOSTATI	SERIES OF THERMOSTATS OR PRESSURE SWITCHES
TA	1	TRASFORMATORE DI ACCENSIONE	IGNITION TRANSFORMER
TAB	2	TERMOSTATO/PRESSOSTATO ALTA-BASSA FIAMMA	HIGH-LOW THERMOSTAT/PRESSURE SWITCHES
TV	1	TERMICO MOTORE VENTILATORE	FAN MOTOR THERMAL

Data 29/10/1996		PREC.	FOGLIO
Revisione 05		3	4
Dis. N. 07 – 348		SEGUE	TOTALE
		/	4

Wiring diagram 18-141

BV	Fan motor contactor coil
CN1	Connector for triphase version
CTV	Fan motor thermal cutout terminals
CV	Fan motor contactor terminals
EVG1	Solenoid valve 1st stage
EVG2	Solenoid valve 2nd stage
F-FU	Fuses (FU=6,3A triphase versions - FU=10A monophase versions)
FILTRO	Line noise filter (optional)
FQ	Connector on electrical board front panel
FR	Photoresistor
IG	Main switch
IL	Auxiliaries line switch
L	Phase
LAF	Burner in high flame signaling lamp
LB	Flame lockout signaling lamp
LBF	Burner in low flame signaling lamp
LEVG1	Opening of solenoid valve EVG1 signaling lamp
LEVG2	Opening of solenoid valve EVG2 signaling lamp
LF	Burner in operation signaling lamp
LOA24	SIEMENS control box
LMO24	SIEMENS control box
LOA44	SIEMENS control box
LT	Fan motor thermal lockout intervention signaling lamp (only triphase versions)
LTA	Ignition transformer in operation signaling lamp
MC1	Terminal block for triphase supply and triphase motor connection
MV	Fan motor
N	Neutral
PI	2nd nozzle priming pushbutton
PS	Flame reset pushbutton (only for LOA44)
ST	Thermostats or pressure switches group
STA/SQN	Actuator for air damper
TA	Ignition transformer
TAB	High-low flame thermostat (if fitted remove the bridge between terminals 6 and 7 on terminal block MA)
TV	Fan motor thermal cutout (only triphase versions)

ATTENTION:

1 - Electric supply 400V 50Hz 3Na.c. and 230V 50Hz 1N a.c.

2 - Don't reverse phase and neutral

3 - Make sure that the burner is properly hearted

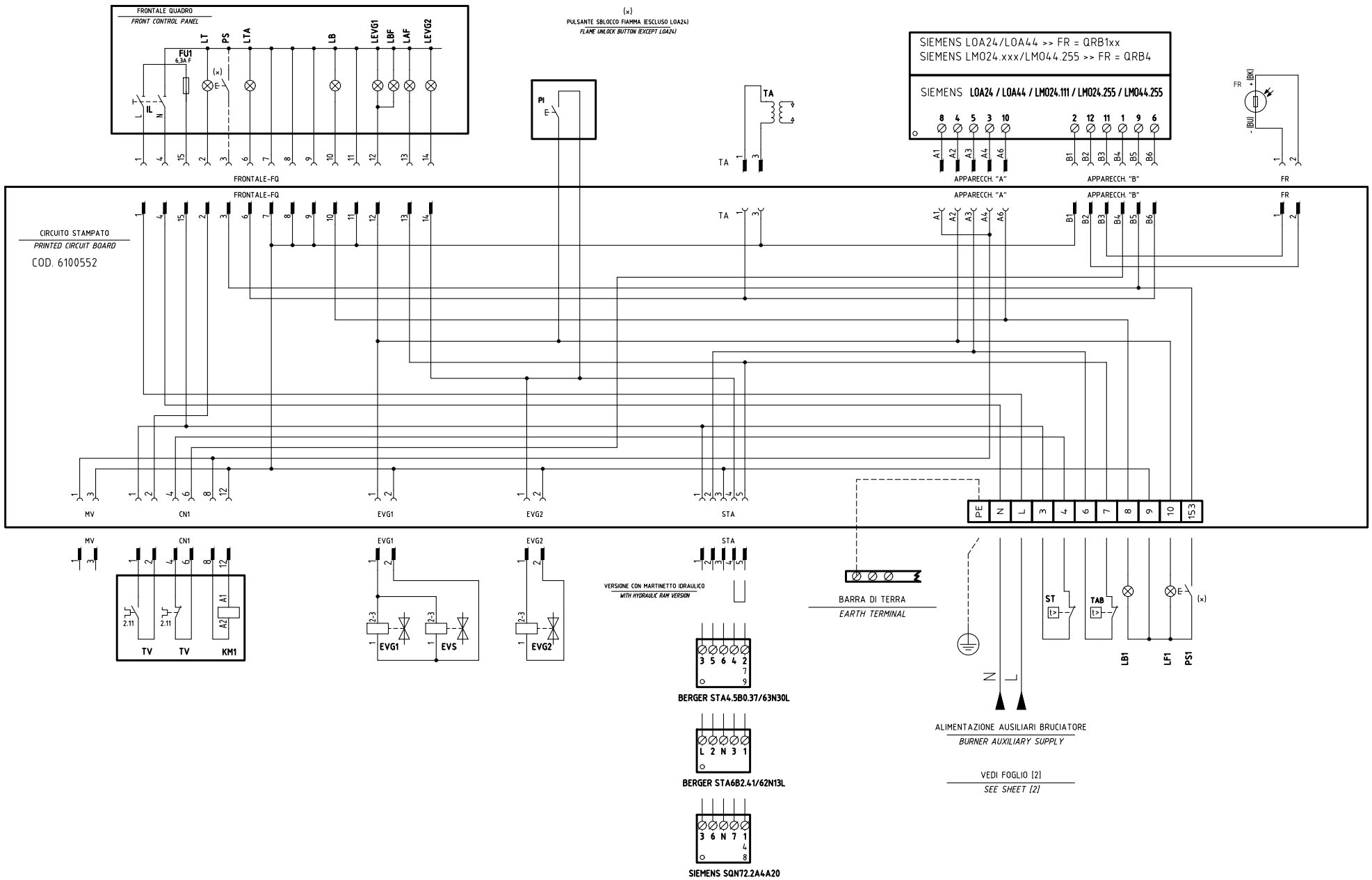

Data	10/12/2007	PREC.	FOGLIO
Revisione	05	/	1
Dis. N.	18 – 0141	SEGUE	TOTALE
		2	2

Sigla/Item	Funzione	Function
BERGER STA4.5B0.37/63N30L	SERVOCOMANDO SERRANDA ARIA	AIR DAMPER ACTUATOR
BERGER STA6B2.41/62N13L	SERVOCOMANDO SERRANDA ARIA (ALTERNATIVO)	AIR DAMPER ACTUATOR (ALTERNATIVE)
EVG1	ELETTROVALVOLA GASOLIO I° STADIO	LIGHT OIL SOLENOID -VALVE - 1st STAGE
EVG2	ELETTROVALVOLA GASOLIO II° STADIO	LIGHT OIL SOLENOID VALVE - 2nd STAGE
EVS	ELETTROVALVOLA GASOLIO DI SICUREZZA	SAFETY LIGHT OIL SOLENOID VALVE
FR	SONDA RILEVAZIONE FIAMMA	FLAME DETECTOR PROBE
FU1	FUSIBILE DI LINEA	LINE FUSE
FU3	FUSIBILI LINEA MOTORE VENTILATORE	FAN MOTOR LINE FUSES
FU4	FUSIBILE DI LINEA	LINE FUSE
IB	INTERRUTTORE LINEA BRUCIATORE	BURNER LINE SWITCH
IG	INTERRUTTORE GENERALE	MAINS SWITCH
IL	INTERRUTTORE LINEA AUSILIARI	AUXILIARY LINE SWITCH
KM1	CONTATTORE MOTORE VENTILATORE	FAN MOTOR CONTACTOR
LAF	LAMPADA SEGNALAZIONE ALTA FIAMMA BRUCIATORE	BURNER IN HIGH FLAME INDICATOR LIGHT
LB	LAMPADA SEGNALAZIONE BLOCCO BRUCIATORE	INDICATOR LIGHT FOR BURNER LOCK-OUT
LB1	LAMPADA SEGNALAZIONE BLOCCO BRUCIATORE	INDICATOR LIGHT FOR BURNER LOCK-OUT
LBF	LAMPADA SEGNALAZIONE BASSA FIAMMA BRUCIATORE	BURNER IN LOW FLAME INDICATOR LIGHT
LEVG1	LAMPADA SEGNALAZIONE APERTURA [EVG1]	INDICATOR LIGHT FOR OPENING OF ELECTRO-VALVE [EVG1]
LEVG2	LAMPADA SEGNALAZIONE APERTURA [EVG2]	INDICATOR LIGHT FOR OPENING OF ELECTRO-VALVE [EVG2]
LF1	LAMPADA SEGNALAZIONE FUNZIONAMENTO BRUCIATORE	INDICATOR LIGHT BURNER OPERATION

Sigla/Item	Funzione	Function
LOA... / LMO...	APPARECCHIATURA CONTROLLO FIAMMA	CONTROL BOX
LT	LAMPADA SEGNALAZIONE BLOCCO TERMICO	INDICATOR LIGHT FOR MOTOR OVERLOAD THERMAL CUTOUT
LTA	LAMPADA SEGNALAZIONE TRASFORMATORE DI ACCENSIONE	IGNITION TRANSFORMER INDICATOR LIGHT
MV	MOTORE VENTILATORE	FAN MOTOR
PI	PULSANTE INNESCO SECONDO STADIO BRUCIATORE	II° STAGE BURNER START BUTTON
PS	PULSANTE SBLOCCO FIAMMA	FLAME UNLOCK BUTTON
PS1	PULSANTE SBLOCCO FIAMMA	FLAME UNLOCK BUTTON
SIEMENS SQN72.2A4A20	SERVOCOMANDO SERRANDA ARIA	AIR DAMPER ACTUATOR
ST	SERIE TERMOSTATI/PRESSOSTATI	SERIES OF THERMOSTATS OR PRESSURE SWITCHES
TA	TRASFORMATORE DI ACCENSIONE	IGNITION TRANSFORMER
TAB	TERMOSTATO/PRESSOSTATO ALTA-BASSA FIAMMA	HIGH-LOW THERMOSTAT/PRESSURE SWITCHES
TS	TERMOSTATO/PRESSOSTATO DI SICUREZZA	SAFETY THERMOSTAT OR PRESSURE SWITCH
TV	TERMICO MOTORE VENTILATORE	FAN MOTOR THERMAL

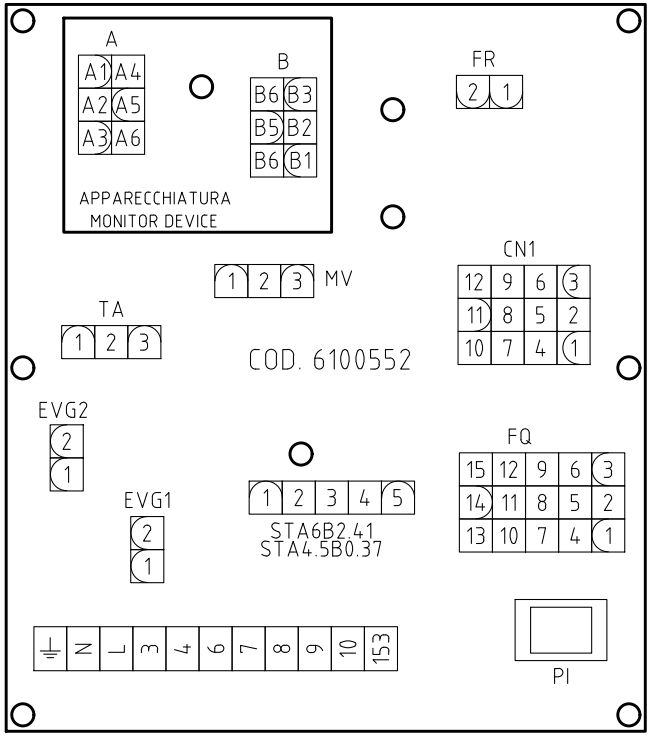

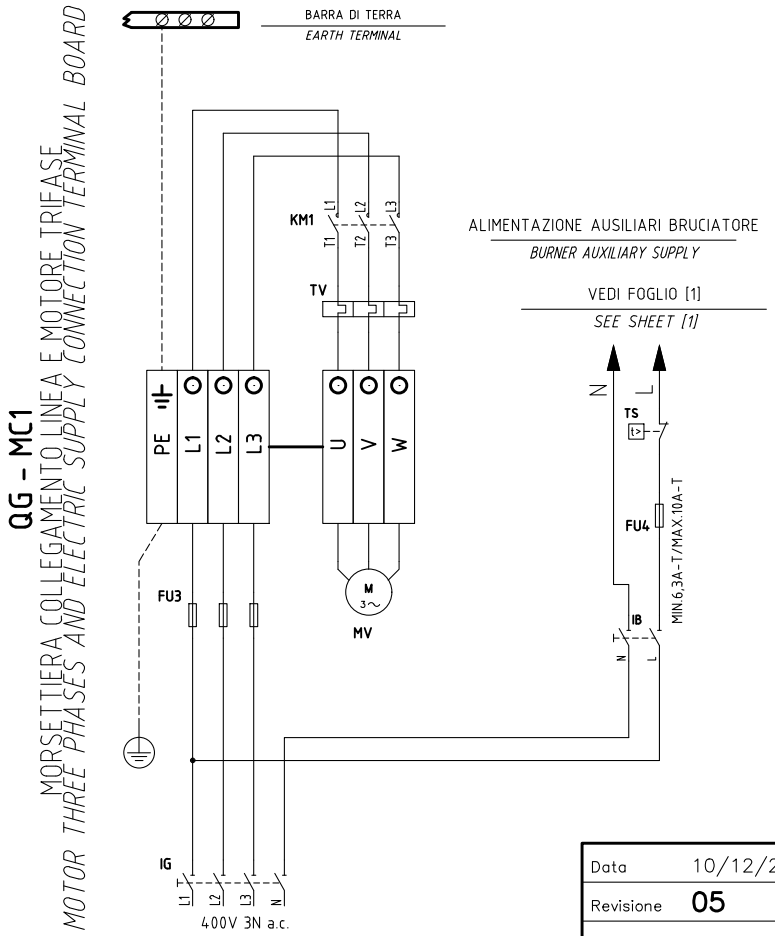

SERVOCOMANDO SERRANDA ARIA
AIR DAMPER ACTUATOR
STA4.5B0.37/037/63N30L

I	ALTA FIAMMA *HIGH FLAME*
II	SOSTA, ACCENSIONE E BASSA FIAMMA *STAND-BY, IGNITION AND LOW FLAME*
III	APERTURA EVG2 *OPEN EVG2*

SERVOCOMANDO SERRANDA ARIA (ALTERNATIVO)
AIR DAMPER ACTUATOR (ALTERNATIVE)
STA6B2.41/62N13L

ST2	ALTA FIAMMA *HIGH FLAME*
ST1	SOSTA, ACCENSIONE E BASSA FIAMMA *STAND-BY, IGNITION AND LOW FLAME*
MV	APERTURA EVG2 *OPEN EVG2*

SERVOCOMANDO SERRANDA ARIA (ALTERNATIVO)
AIR DAMPER ACTUATOR (ALTERNATIVE)
SQN72.2.A4A20

I (ROSSO) *I (RED)*	ALTA FIAMMA *HIGH FLAME*
II (BLU) *II (BLUE)*	SOSTA, ACCENSIONE E BASSA FIAMMA *STAND-BY, IGNITION AND LOW FLAME*
IV (NERO) *IV (BLACK)*	APERTURA EVG2 *OPEN EVG2*

Data	10/12/2007	PREC.	FOGLIO
Revisione	05	1	2
Dis. N.	18 – 0141	SEGUE	TOTALE
		/	2

SIEMENS OIL BURNERS AUTOMATIC CONTROLLER SIEMENS LMO14 - LMO24 - LMO44

The LMO... burner controls are designed for the start-up and supervision of single- or 2-stage forced draught oil burners in intermittent operation. Yellow-burning flames are supervised with photoresistive detectors QRB..., blue-burning flames with blue-flame detectors QRC...

In terms of housing dimensions, electrical connections and flame detectors, the LMO... are identical to the LOA... oil burner controls.

Preconditions for startup

- Burner control is reset
- All contacts in the line are closed
- No undervoltage
- Flame detector is darkened, no extraneous light

Undervoltage

- Safety shut-down in the operating position takes place should the mains voltage drop below about AC 165 V
- Restart is initiated when the mains voltage exceeds about AC 175 V

Time supervision oil pre-heater

If the oil pre-heater's release contact does not close within 10 minutes, the burner control will initiate lock-out.

Controlled intermittent operation

After no more than 24 hours of continuous operation, the burner control will initiate an automatic safety shut-down followed by a restart.

Control sequence in the event of fault

If lock-out occurs, the outputs for the fuel valves and the ignition will immediately be deactivated (< 1 second).

Cause	Response
After a mains failure	Restart
After voltage has fallen below the undervoltage threshold	Restart
In the event of a premature, faulty flame signal during «t1»	Lock-out at the end of «t1»
In the event of a premature, faulty flame signal during «tw»	Prevention of start-up, lock-out after no more than 40 seconds
If the burner does not ignite during «TSA»	Lock-out at the end of TSA
In the event the flame is lost during operation	Max. 3 repetitions, followed by lock-out
Oil pre-heater's release contact does not close within 10 min.	Lock-out

Lock-out

In the event of lock-out, the LMO... remains locked (lock-out cannot be changed), and the red signal lamp will light up. This status is also maintained in the case of a mains failure.

Resetting the burner

Whenever lock-out occurs, the burner control can immediately be reset. To do this, keep control the lock-out reset button depressed for about 1 second (< 3 seconds).

Ignition program with LMO24.113A2

If the flame is lost during «TSA», the burner will be reignited, but not later than at the end of «TSAmax.». This means that several ignition attempts can be made during TSA (refer to «Program sequence»).

Limitation of repetitions

If the flame is lost during operation, a maximum of 3 repetitions can be made. If the flame is lost for the 4th time during operation, the burner will initiate lock-out. The repetition count is restarted each time controlled switching on by «R-W-SB» takes place.

Operation

Lock-out reset button «EK...» is the key operating element for resetting the burner control and for activating / deactivating the diagnostic functions.

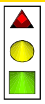

The multicolour «LED» is the key indicating element for both visual diagnosis and interface diagnosis.

s Red
l Yellow
o Green

Colour code table		
Status	Colour code	Colour
Oil pre-heater heats, waiting time «tw»	llllllllll	Yellow
Ignition phase, ignition controlled	lmlmlmlmlml	Yellow-off
Operation, flame o.k.	oooooooooooo	Green
Operation, flame not o.k.	omomomomomo	Green-off
Undervoltage	lslslslslsl	Yellow-red
Fault, alarm	ssssssssssss	Red
Output of fault code (refer to Fault code table)	smsmsmsmsm	Red-off
Extraneous light prior to burner start-up	osososososo	Green-red
Interface diagnosis	sssssssssssssss	Red flicker light

Key

m Off
l Yellow
o Green
s Red

Diagnosis of cause of fault

After lock-out, the red fault signal lamp remains steady on.

In that condition, the visual diagnosis of the cause of fault according to the error code table can be activated by pressing the lock-out reset button for more than 3 seconds.

Error code table	
Blink code	**Possible cause**
2 blinks **	No establishment of flame at the end of TSA ● Faulty or soiled fuel valves ● Faulty or soiled flame detector ● Poor adjustment of burner, no fuel ● Faulty ignition
3 blinks ***	Free
4 blinks ****	Extraneous light on burner startup
5 blinks *****	Free
6 blinks ******	Free
7 blinks *******	Too manny losses of fleme during operation (limitattion og the number of repetitions) ● Faulty or soiled fuel valves ● Faulty or soiled flame detector ● Poor adjustment of burner
8 blinks ********	Time supervision oil pre-heater
9 blinks *********	Free
10 blinks **********	Wiring error or internal error, output contacts

During the time the cause of fault is diagnosed, the control outputs are deactivated.

- Burner remains shut down
- Fault status signal «AL» at terminal 10 is activated

The diagnosis of the cause of fault is quit and the burner switched on again by resetting the burner control.

Press lock-out reset button for about 1 second (< 3 seconds).

Connection diagram and internal diagram

LMO14

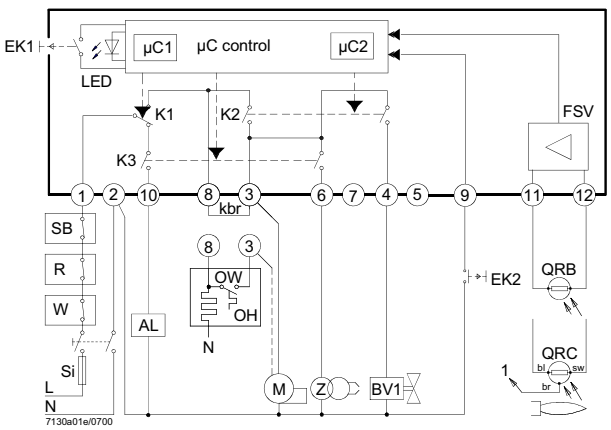

LMO24 - LMO44

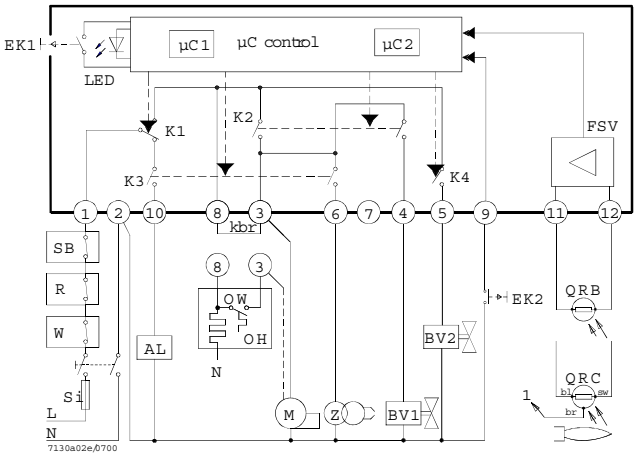

Control sequence

LMO14

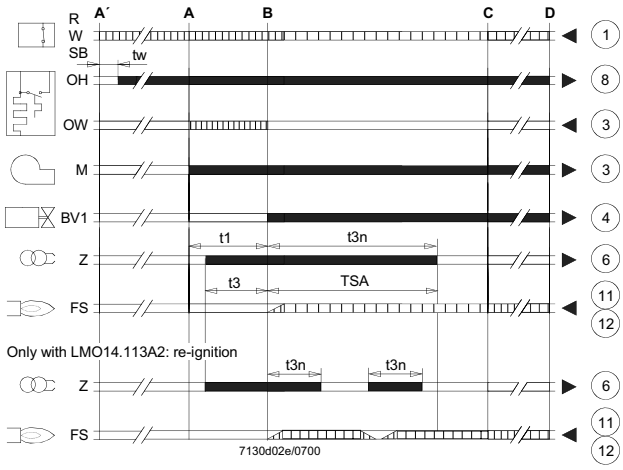

LMO24 - LMO44

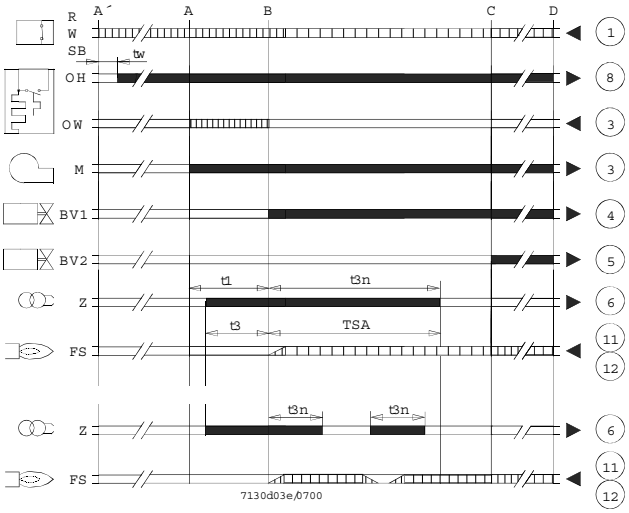

Key

AL	Alarm device
kbr...	Cable link (required only when no oil pre-heater is used)
BV...	Fuel valve
EK1	Lock-out reset button
EK2	Remote lock-out reset button
FS	Flame signal
FSV	Flame signal amplifier
K...	Contacts of control relay
LED	3-colour signal lamps
M	Burner motor
OW	Release contact of oil pre-heater
t1	Pre-purge time
t3	Pre-ignition time
t3n	Post-ignition time
A´	Beginning of start-up sequence with burners using an oil pre-heater
A	Beginning of start-up sequence with burners using no oil pre-heater
	Controller output signals
	Required input signals
OH	Oil pre-heater
QRB	Photoresistive detector
QRC	Blue-flame detector
bl = blue	
br = brown	
sw = black	
R	Control thermostat or pressurestat
SB	Safety limit thermostat
Si	External primary fuse
W	Limit thermostat or pressure switch
Z	Ignition transformer
t4	Interval from flame signal to release «BV2»
TSA	Ignition safety time
tw	Waiting time for oil pre-heating
B	Time of flame establishment
C	Operating position
D	Controlled shut-down by «R»
µC1	Microcontroller 1
µC2	Microcontroller 2

General unit data

Mains voltage	AC 230 V +10 % / -15 %
	AC 120 V +10 % / -15 %
Mains frequency	50...60 Hz ±6 %
External primary fuse (Si)	6.3A (slow)
Power consumption	12 VA
Mounting orientation	optional
Weight	approx. 200 g
Degree of protection	IP40 (to be ensured through mounting)
Perm. cable lengths	max. 3m at line capacitance of 100 pF/m
Detector cable laid separately	10 m
Remote reset laid separately	20m

	LMO14	LMO24	LMO44
Terminal 1	5 A	5 A	5 A
Terminals 3 and 8	3 A	5 A	5 A
Terminals 4, 5 and 10	1 A	1 A	1A
Terminals 6	1 A	1 A	2A

Flame supervision with QRB and QRC

	QRB	QRC
Min. detector current required (with flame)	45 µA	70 µA
Min detector current permitted (without flame)	5.5 µA	5.5 µA
Max. possible with flame (tipically)	100 µA	100 µA

Measurement circuit for detector current

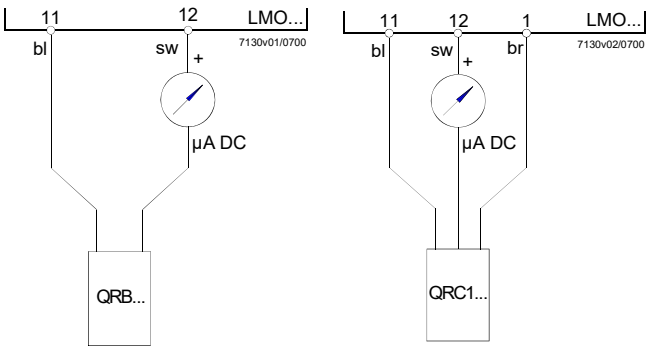

Key

µA DC	DC microamperometer with an internal resistance of 5 kW max.
bl	Blue
sw	Black
br	Brown

SIEMENS OIL BURNERS AUTOMATIC CONTROLLER LOA24

Use

LOA... safety devices are intended for use solely with QRB... photoresistors, for lighting and controlling low capacity forced air light oil burners with max. capacity 30 kg/h in accordance with standard DIN 4787.

The One or two flamess are lit through electrical connections with or without post-ignition.

To replace LAI... AND LAB.. WITH LOA...

LOA... models can be used as replacement for LAI... and LAB.. controllers by means of the adapter KF8819 and without the need to change the electrical wiring. Because the LOA is smaller in dimensions, when it is used with the adapter the external dimensions are almost identical, which means that there is no need to move the reset button.

Performance

The controllers just need plugging in, so they can be mounted in almost any position: on the burner, on the electrical panel or on the control panel. The casing is made of robust heat-resistant plastic and contains:

- the thermic programmer operating a multiple switch control system with ambient temperature compensator
- flame signal amplifier with flame relay
- warning light indicating lockout and associated sealed reset button.

The plug-in socket, also made of robust heat-resistant plastic, contains the 12 terminals and also:

- 3 neutral terminals, ready wired up to terminal 2
- 4 earth terminals for earthing the burner
- 2 supplementary terminals numbered “31” and “32”.

The socket has two openings at the bottom for the leads; 5 others with threaded connection for cable holders PG11 or 3/4UNP for non-metallic sleeves are located on a mobile stuffing box, one on either side and 3 on the front.

There are two flexible metal tongues on the sides of the socket for mounting.

To dismantle it only requires gentle pressure with a screw driver in the slot of the mounting guide. The base dimensions of the socket are exaclty the same as for types LAB/LAI and there is no difference in the diameter of the reset button, the two mounting screws and the flange of the burner earth.

Safety at low voltage levels

Safety devices against any reduction in the mains voltage operate on a special electronic circuit which, in the event of the power supply falling below 165V~, stops the burner switching on without releasing the fuel and locks out the apparatus.

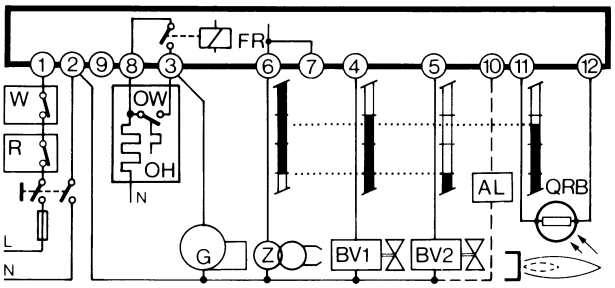

Wiring diagram of the program

To ensure correct wiring it is essential to observe local standards and follow the instructions of the burner manufacturer with regard to assembly and start-up.

Program's legend:

Controller output signals

Required input signals

A’	Burner start up with light oil pre-heater OH
A	Burner start-up without light oil pre-heater
B	Flame lit
C	Normal operation
D	Normal stop through R
tw	Oil pre-heating time until operational all clear given through contact OW
tl	Pre-purge time
t3	Pre-ignition time
t2	Safety time
t3n	Post-ignition time
t4	Interval between the flame lighting and energising of solenoid 2a at terminal 5

Internal layout

AL	Optical alarm
BV.	Fuel valve
EK	Reset button
FR	Flame relay
fr	Flame relay contacts
FS	Flame alight signal
G	Burner motor
K	Flame relay anchor to delay the tzl command in the event of a premature flame signal or endorse it where the signal is correct.
OH	light oil pre-heater
OW	Operational all-clear contact
QRB	Photo-resistant cell (flame detector)
R	Thermostat or pressure switch
TZ	Thermo-electric programmer (bimetal system)
tz..	TZ contacts
V	Flame signal amplifier
W	Safety thermostat or pressure switch
Z	Ignition transformer

The above are safety devices!

To tamper with them in any way may have unforeseeable conse-

quences!

Do not open them!

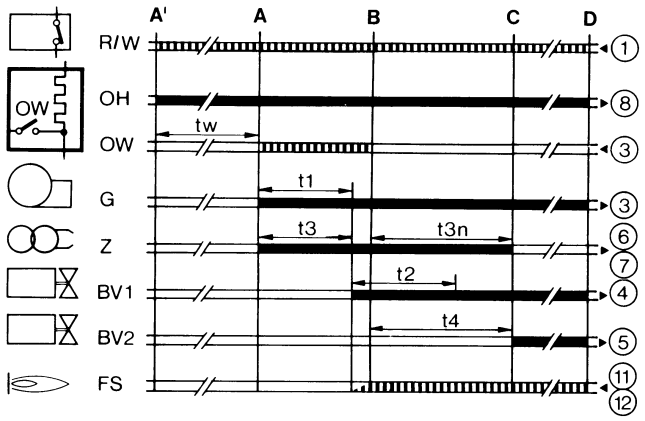

Technical characteristics

Voltage	220V -15%..240V+10% or 100V -15%...110V+10%
Frequency	50...60Hz +/- 6%
External fuse	max.10A slow action
Contact flow:	
- terminal 1	5A
- terminal 3	5A (incl.capacity absorbed by motor and pre-heater)
Terminal flow:	
terminals 4, 5 &10	1A
terminals 6&7	2A
terminal 8	5A
Absorbed cap	3VA
Protection	IP40
Premitted temp:	
operational	-20...+60°C
transport & storage	-50...+60°C
Emplacement	any
Mass (weight)	controller 180g, socket 50g, AGK accessories 12 g.

Commands in the event of operational interference

Stray light/premature ignition

During pre-purge and/or pre-ignition there should be no flamesignal. If there is a flame signal, eg from premature ignition due to a faulty solenoid, external light, short circuit in the photoresisto or wiring, malfunction in the flame signal amplifier, etc., at the end of pre-purge and safety time the controller locks out the burner and stops the fuel flow even during safety time.

Absence of flame

If there is no flame at the end of safety time the controller locks out immediately.

Absence of flame during operation

If there is no flame during operation the controller cuts off the supply of fuel and automatically initiates a fresh start-up programme: at the end of t4 the start-up programme ends.

Whenever there is a safety stop, terminals 3-8 and 11 are de-energised in less than 1 second; at the same time a remote lockout signal is transmitted through terminal 10. The controller can be reset after c. 50 seconds.

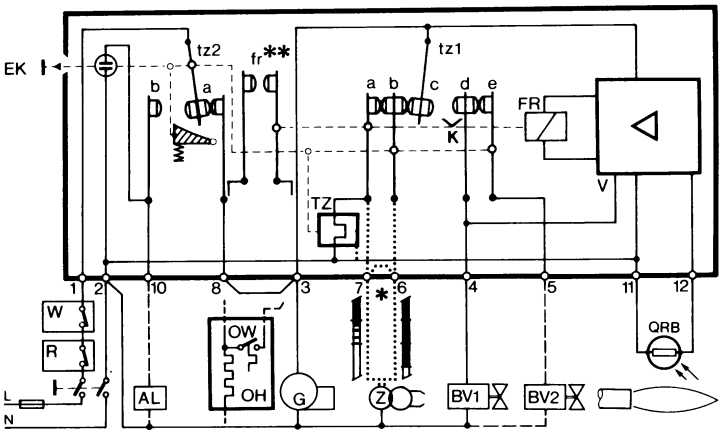

C.I.B. UNIGAS S.p.A.
Via L.Galvani, 9 - 35011 Campodarsego (PD) - ITALY
Tel. +39 049 9200944 - Fax +39 049 9200945/9201269
web site: www.cibunigas.it - e-mail: cibunigas@cibunigas.it

Note: specifications and data subject to change. Errors and omissions excepted.

FOGLIO AGGIUNTIVO PER BRUCIATORI DI GASOLIO A DUE UGELLI DOTATI DI COMANDO SERRANDA ARIA MEDIANTE MARTINETTO IDRAULICO

ADDITIONAL SHEET FOR LIGHT OIL BURNER WITH TWO NOZZLES EQUIPPED WITH AIR DAMPER HYDRAULIC DRIVE COMMAND

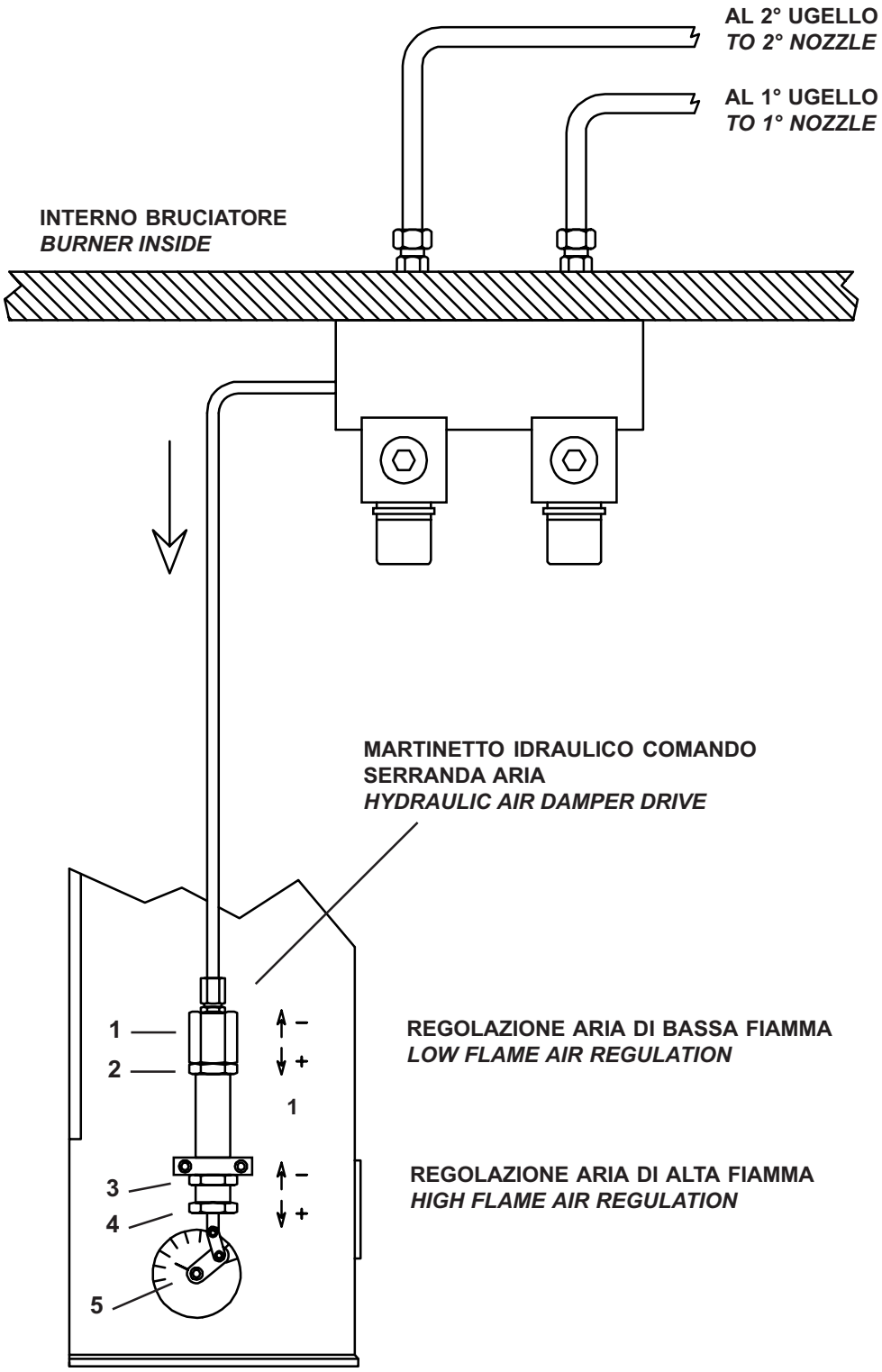

REGOLAZIONE ARIA (Eseguire prima la taratura della bassa fiamma)

a) Taratura bassa fiamma :

Per la taratura della bassa fiamma procedere come segue :

Aprire il contatto del regolatore secondo stadio, allentare il controdado(**2**) e ruotare direttamente il corpo martinetto(**1**) :

Avvitando, aumenta la portata di aria in bassa fiamma.

Svitando, diminuisce la portata aria in bassa fiamma.

Le variazioni di regolazione della portata aria sono rilevabili dallo spostamento dell'indice serranda aria (**5**).

A regolazione ultimata ribloccare il controdado(**2**) .

b) Taratura alta fiamma :

Per la taratura dell'alta fiamma procedere come segue:

Chiudere il contatto del regolatore secondo stadio, allentare il controdado(**3**) e ruotare il dado (**4**):

Svitando, aumenta la portata di aria in alta fiamma.

Avvitando, diminuisce la portata aria in alta fiamma.

Le variazioni di regolazione della portata aria sono rilevabili dallo spostamento dell'indice serranda aria (**5**).

A regolazione ultimata ribloccare il controdado (**3**) .

N.B. Nella procedura di taratura della fase "b" la taratura "a" rimane invariata.

ATTENZIONE: per il funzionamento del martinetto la pompa non deve essere tarata ad una pressione inferiore a 12 bar.

AIR SETTING (The low flame air setting must be carried out first)

a) *Low fire setting :*

To set the low flame, proceed as follow.

*Break off the contact of the second stage regulator, unscrew the locking nut (2) and turn directly the body of the air damper drive(**1**).*

Turn clockwise to increase the air flow of the low flame stage; turn counterclockwise to decrease the air flow.

*You notice that the air flow is changing, by the movement of the air damper index (**5**).*

*At the end of settings, lock again the nut (**2**).*

***b**)* *High flame setting*

To set the high flame, proceed as follow.

*Close the contact of the second stage regulator and unlock the nut (**3**); turn the nut (**4**).*

Turning counterclockwise the high flame air flow is increased, turning clockwise the air flow is decreased.

*You notice that the air flow is changing, by the movement of the air damper index (**5**).*

*At the end of settings, lock again the nut (**3**).*

NOTICE: during the point b regulations, the point a remains unchanged.

***WARNING: for operation with hydraulic damper* drive, the pump must not be set to a pressure lower than 12 bar.**

PER ALTRE INFORMAZIONI VEDI L'ALLEGATO MANUALE TECNICO BRUCIATORE
FOR OTHER INFORMATION SEE THE ATTACHED BURNER TECHNICAL MANUAL

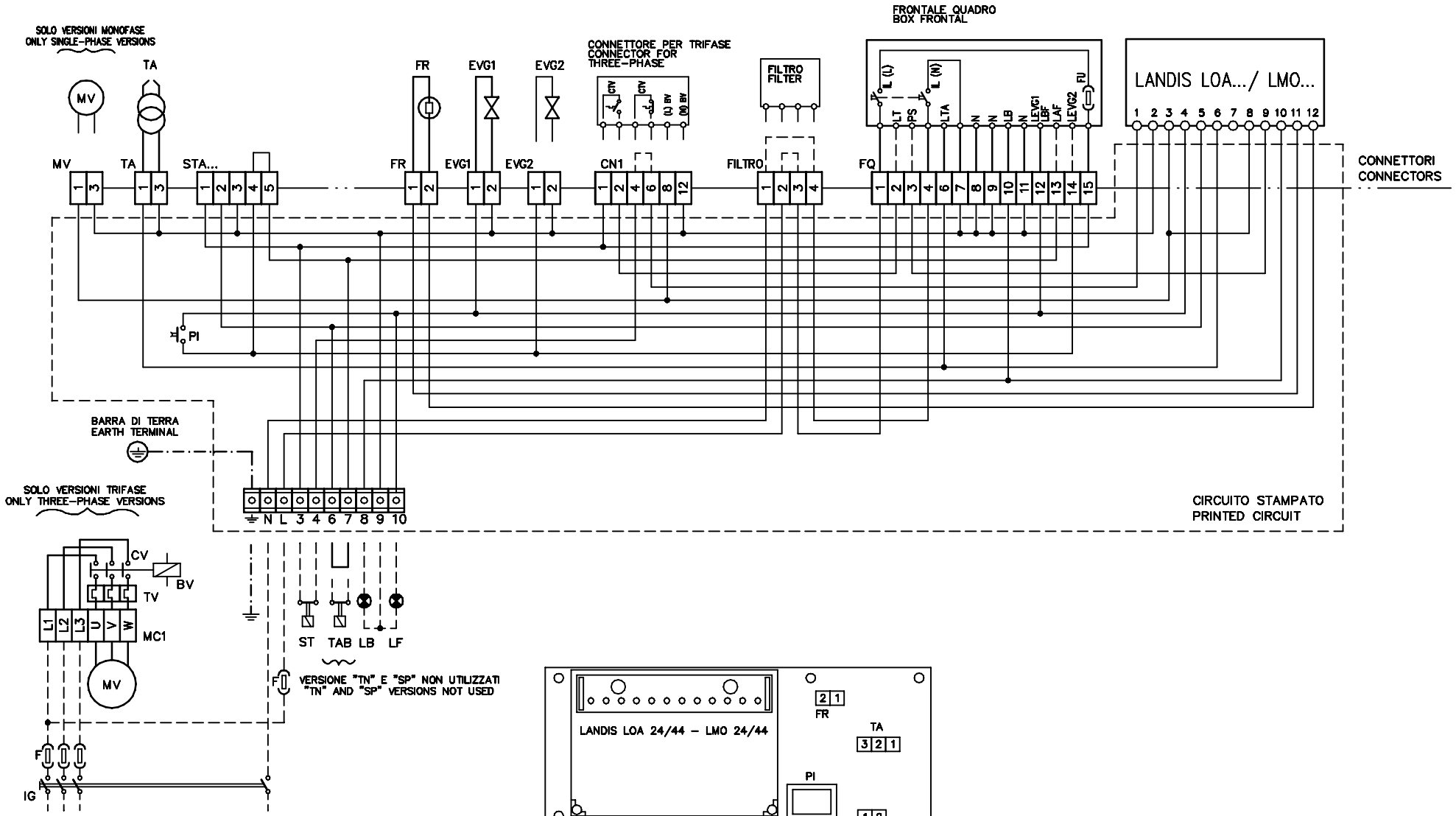

FARE I COLLEGAMENTI ALLA RETE ELETTRICA COME DA NORME VIGENTI
CONNECT TO THE MAINS ACCORDING TO CURRENT LAWS

FOGLIO SHEET	1	DI OF	1
CODICE/CODE		REV.	
18 – 012		02	

L E G E N D A cod. 18-012 REV.2

BV	-	Bobina contattore motore ventilatore
CN1	-	Connettore per versione trifase
CTV	-	Contatti termico motore ventilatore
CV	-	Contatti contattore motore ventilatore (solo versioni trifase)
EVG1	-	Elettrovalvola gasolio I° stadio
EVG2	-	Elettrovalvola gasolio II° stadio
F-FU	-	Fusibili (FU=6,3A versioni trifase – FU=10A versioni monofase)
FILTRO	-	Filtro antidisturbo (optional)
FQ	-	Connettore frontale quadro
FR	-	Fotoresistenza
IG	-	Interruttore generale
IL	-	Interruttore linea ausiliari
L	-	Fase
LAF	-	Lampada segnalazione bruciatore in alta fiamma
LB	-	Lampada segnalazione blocco fiamma
LBF	-	Lampada segnalazione bruciatore in bassa fiamma
LEVG1	-	Lampada segnalazione apertura elettrovalvola EVG1
LEVG2	-	Lampada segnalazione apertura elettrovalvola EVG2
LOA24/LMO24	-	Apparecchiatura LANDIS controllo fiamma (per tipi PG30/PG45/PG60)
LOA44/LMO44	-	Apparecchiatura LANDIS controllo fiamma (per tipi PG70/PG80/PG90/PG91)
LT	-	Lampada segnalazione blocco termico motore ventilatore (solo versioni trifase)
LTA	-	Lampada segnalazione trasformatore di accensione
MC1	-	Morsettiera di collegamento alimentazione trifase e motore trifase
MV	-	Motore ventilatore
N	-	Neutro
PI	-	Pulsante innesco II° ugello
PS	-	Pulsante sblocco fiamma (solo per LOA44/LMO44)
ST	-	Serie termostati o pressostati
STA	-	Connettore scheda esclusione servocomando
TA	-	Trasformatore di accensione
TAB	-	Termostato alta/bassa fiamma (dove previsto togliere il ponte tra i morsetti 6 e 7 nella morsettiera MA)
TV	-	Termico motore ventilatore (solo versioni trifase)

ATTENZIONE :
1 - Alimentazione elettrica 400V 50Hz 3N a.c. trifase e 230V 50Hz 2N a.c. monofase
2 - Non invertire fase con neutro
3 - Assicurare una buona messa a terra del bruciatore

L E G E N D cod. 18-012 REV.2

BV	-	Fan motor remote contactor
CN1	-	Connector for three-phase version
CTV	-	Fan motor overload contacts
CV	-	Fan motor contactor
EVG1	-	Light oil electro-valve I° stage
EVG2	-	Light oil electro-valve II° stage
F-FU	-	Fuses (FU=6,3A for three-phase version – FU=10A for single-phase version)
FR	-	Photoresistor flame detector
IG	-	Main switch
IL	-	Auxiliary line switch
L	-	Phase
LAF	-	Burner in high flame indicator light
LB	-	Burner lockout indicator light
LBF	-	Burner in low flame indicator light
LEVG1	-	Indicator light for opening of electro-valve EVG1
LEVG2	-	Indicator light for opening of electro-valve EVG2
LOA24/LMO24	-	LANDIS flame monitor device (for PG30/PG45/PG60 burners)
LOA44/LMO44	-	LANDIS flame monitor device (for PG70/PG80/PG90/PG91burners)
LT	-	Indicator light for fan overload tripped (only three-phase versions)
LTA	-	Ignition transformer indicator light
MC1	-	Terminal block for connection of three-phase line and three-phase fan motor)
MV	-	Fan motor
N	-	Neutral
PI	-	Primer II° nozzle button
PS	-	Lock-out reset button (only burners with LOA44/LMO44)
ST	-	Series of thermostat or pressure switches
STA	-	Printed circuit connector for exclusion servo control
TA	-	Ignition transformer
TAB	-	High low thermostat (where supplied, remove the bridge between terminals 6 and 7 in terminal block MA)
TV	-	Fan motor thermal

WARNING :
1 - Electrical supply 400V 50Hz 3N a.c.
2 - Do not reverse phase with neutral
3 - Ensure burner is properly earthed

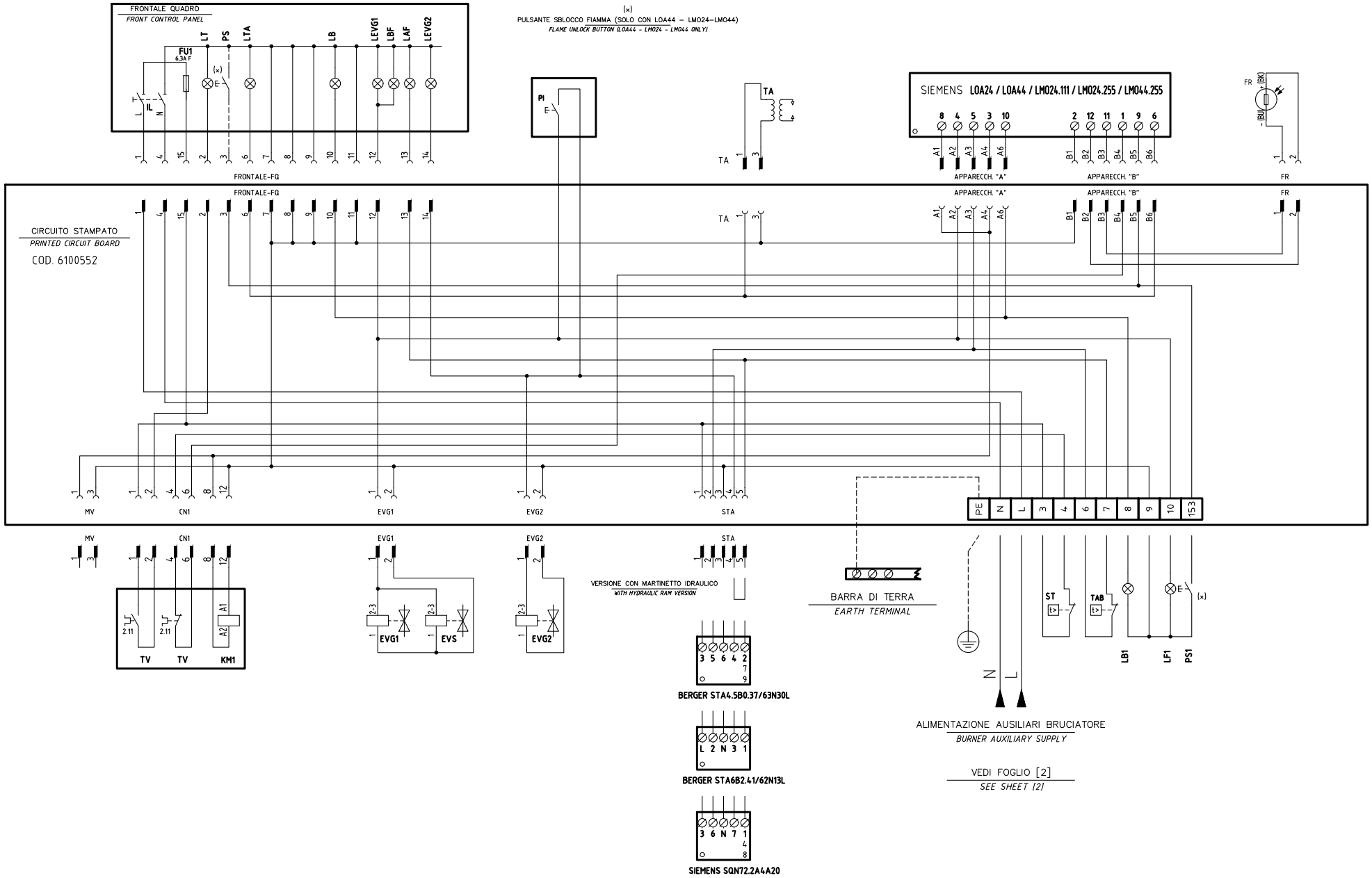

REV.	MODIFICA	DATA	FIRME
04	AGGIUNTO/ADDED "EVS"	22/02/13	U. PINTON
03	AGGIUNTO/ADDED LMO24.255	07/01/13	U. PINTON
02	AGGIUNTO/ADDED SQN72...	22/05/09	U. PINTON
01	EARTH TERMINAL ADDED	10/12/07	U. PINTON

UNIGAS

Impianto
TIPI/TYPES PG60/PG70/PG81/PG90/PG91
MODELLO G–.AB.x.xx.A.(M)

Descrizione

Ordine

Commessa

Esecutore: U. PINTON

Data Controllato: 06/08/2014

Controllato: E. CAVALLI

Data: 10/12/2007

Revisione: 04

Dis. N.: 18 – 141

PREC.: /

FOGLIO: 1

SEGUE: 2

TOTALE: 2

SIGLA/ITEM	DESCRZIONE	DESCRIPTION
BERGER STA4.5B0.37/63N30L	SERVOCOMANDO SERRANDA ARIA	AIR DAMPER ACTUATOR
BERGER STA6B2.41/62N13L	SERVOCOMANDO SERRANDA ARIA (ALTERNATIVO)	AIR DAMPER ACTUATOR (ALTERNATIVE)
EVG1	ELETTROVALVOLA GASOLIO I° STADIO	LIGHT OIL SOLENOID -VALVE - 1st STAGE
EVG2	ELETTROVALVOLA GASOLIO II° STADIO	LIGHT OIL SOLENOID VALVE - 2nd STAGE
EVS	ELETTROVALVOLA GASOLIO DI SICUREZZA	SAFETY LIGHT OIL SOLENOID VALVE
FR	FOTORESISTENZA RILEVAZIONE FIAMMA	PHOTORESISTOR FLAME DETECTOR
FU1	FUSIBILE DI LINEA	LINE FUSE
FU3	FUSIBILI LINEA MOTORE VENTILATORE	FAN MOTOR LINE FUSES
FU4	FUSIBILE DI LINEA	LINE FUSE
IB	INTERRUTTORE LINEA BRUCIATORE	BURNER LINE SWITCH
IG	INTERRUTTORE GENERALE	MAINS SWITCH
IL	INTERRUTTORE LINEA AUSILIARI	AUXILIARY LINE SWITCH
KM1	CONTATTORE MOTORE VENTILATORE	FAN MOTOR CONTACTOR
LAF	LAMPADA SEGNALAZIONE ALTA FIAMMA BRUCIATORE	BURNER IN HIGH FLAME INDICATOR LIGHT
LB	LAMPADA SEGNALAZIONE BLOCCO BRUCIATORE	INDICATOR LIGHT FOR BURNER LOCK-OUT
LB1	LAMPADA SEGNALAZIONE BLOCCO BRUCIATORE	INDICATOR LIGHT FOR BURNER LOCK-OUT
LBF	LAMPADA SEGNALAZIONE BASSA FIAMMA BRUCIATORE	BURNER IN LOW FLAME INDICATOR LIGHT

SIGLA/ITEM	DESCRIZIONE	DESCRIPTION
LEVG1	LAMPADA SEGNALAZIONE APERTURA [EVG1]	INDICATOR LIGHT FOR OPENING OF ELECTRO-VALVE [EVG1]
LEVG2	LAMPADA SEGNALAZIONE APERTURA [EVG2]	INDICATOR LIGHT FOR OPENING OF ELECTRO-VALVE [EVG2]
LF1	LAMPADA SEGNALAZIONE FUNZIONAMENTO BRUCIATORE	INDICATOR LIGHT BURNER OPERATION
LOA.. / LMO..	APPARECCHIATURA CONTROLLO FIAMMA	CONTROL BOX
LT	LAMPADA SEGNALAZIONE BLOCCO TERMICO	INDICATOR LIGHT FOR MOTOR OVERLOAD THERMAL CUTOUT
LTA	LAMPADA SEGNALAZIONE TRASFORMATORE DI ACCENSIONE	IGNITION TRANSFORMER INDICATOR LIGHT
MV	MOTORE VENTILATORE	FAN MOTOR
PI	PULSANTE INNESCO SECONDO STADIO BRUCIATORE	II° STAGE BURNER START BUTTON
PS	PULSANTE SBLOCCO FIAMMA	FLAME UNLOCK BUTTON
PS1	PULSANTE SBLOCCO FIAMMA	FLAME UNLOCK BUTTON
SIEMENS SQN72.2A4A20	SERVOCOMANDO SERRANDA ARIA	AIR DAMPER ACTUATOR
ST	SERIE TERMOSTATI/PRESSOSTATI	SERIES OF THERMOSTATS OR PRESSURE SWITCHES
TA	TRASFORMATORE DI ACCENSIONE	IGNITION TRANSFORMER
TAB	TERMOSTATO/PRESSOSTATO ALTA-BASSA FIAMMA	HIGH-LOW THERMOSTAT/PRESSURE SWITCHES
TS	TERMOSTATO/PRESSOSTATO DI SICUREZZA	SAFETY THERMOSTAT OR PRESSURE SWITCH
TV	TERMICO MOTORE VENTILATORE	FAN MOTOR THERMAL

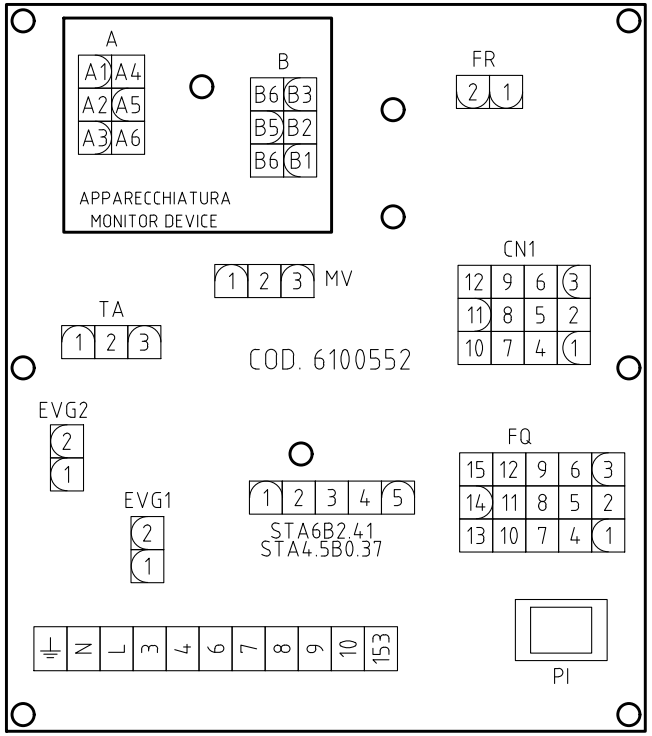

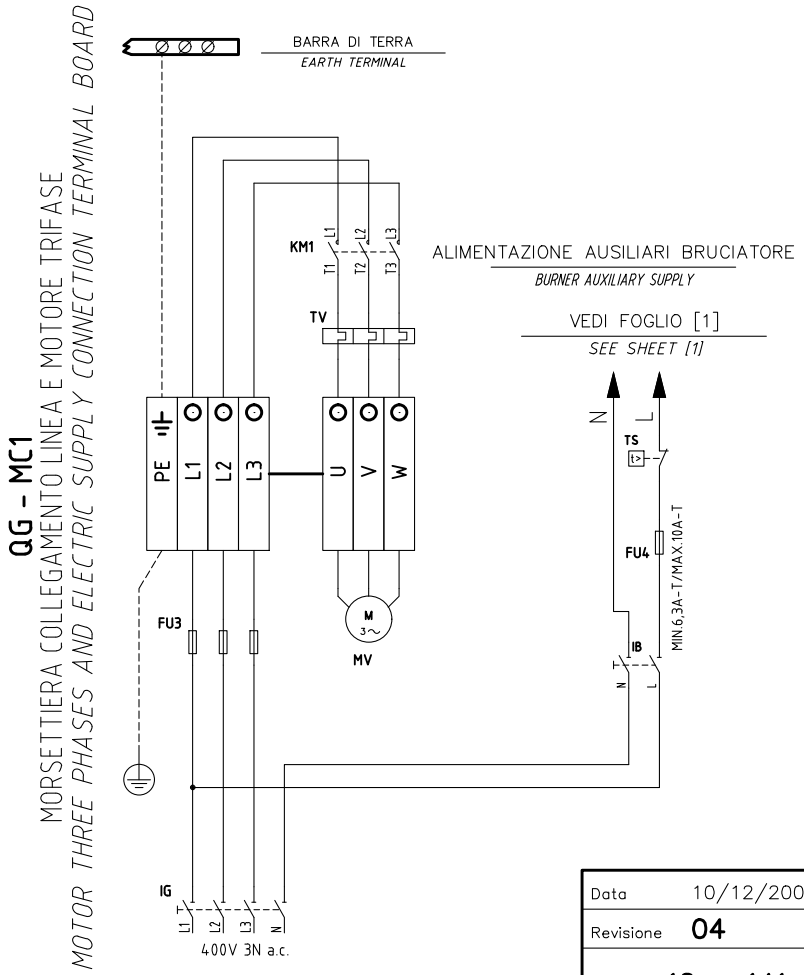

QG - MC1

MORSETTIERA COLLEGAMENTO LINEA E MOTORE TRIFASE

MOTOR THREE PHASES AND ELECTRIC SUPPLY CONNECTION TERMINAL BOARD

SERVOCOMANDO SERRANDA ARIA
AIR DAMPER ACTUATOR
STA4.5B0.37/037/63N30L

I	ALTA FIAMMA *HIGH FLAME*
II	SOSTA, ACCENSIONE E BASSA FIAMMA *STAND-BY, IGNITION AND LOW FLAME*
III	APERTURA EVG2 *OPEN EVG2*

SERVOCOMANDO SERRANDA ARIA (ALTERNATIVO)
AIR DAMPER ACTUATOR (ALTERNATIVE)
STA6B2.41/62N13L

ST2	ALTA FIAMMA *HIGH FLAME*
ST1	SOSTA, ACCENSIONE E BASSA FIAMMA *STAND-BY, IGNITION AND LOW FLAME*
MV	APERTURA EVG2 *OPEN EVG2*

SERVOCOMANDO SERRANDA ARIA (ALTERNATIVO)
AIR DAMPER ACTUATOR (ALTERNATIVE)
SQN72.2.A4A20

I (ROSSO) *I (RED)*	ALTA FIAMMA *HIGH FLAME*
II (BLU) *II (BLUE)*	SOSTA, ACCENSIONE E BASSA FIAMMA *STAND-BY, IGNITION AND LOW FLAME*
IV (NERO) *IV (BLACK)*	APERTURA EVG2 *OPEN EVG2*

Data	10/12/2007	PREC.	FOGLIO
Revisione	04	1	2
Dis. N.	18 – 141	SEGUE	TOTALE
		/	2