KP60
KP72 - KP73

Progressive and fully-modulating gas - heavy oil burners

MANUAL OF INSTALLATION - USE - MAINTENANCE

CIB UNIGAS

BURNERS - BRUCIATORI - BRULERS - BRENNER - QUEMADORES - ГОРЕЛКИ

M039193CE Rev. 4.9 11/2021

DANGERS, WARNINGS AND NOTES OF CAUTION

THIS MANUAL IS SUPPLIED AS AN INTEGRAL AND ESSENTIAL PART OF THE PRODUCT AND MUST BE DELIVERED TO THE USER.

INFORMATION INCLUDED IN THIS SECTION ARE DEDICATED BOTH TO THE USER AND TO PERSONNEL FOLLOWING PRODUCT INSTALLATION AND MAINTENANCE.

THE USER WILL FIND FURTHER INFORMATION ABOUT OPERATING AND USE RESTRICTIONS, IN THE SECOND SECTION OF THIS MANUAL. WE HIGHLY RECOMMEND TO READ IT.

CAREFULLY KEEP THIS MANUAL FOR FUTURE REFERENCE.

1) GENERAL INTRODUCTION

- The equipment must be installed in compliance with the regulations in force, following the manufacturer's instructions, by qualified personnel.
- Qualified personnel means those having technical knowledge in the field of components for civil or industrial heating systems, sanitary hot water generation and particularly service centres authorised by the manufacturer.
- Improper installation may cause injury to people and animals, or damage to property, for which the manufacturer cannot be held liable.
- Remove all packaging material and inspect the equipment for integrity.

In case of any doubt, do not use the unit - contact the supplier.

The packaging materials (wooden crate, nails, fastening devices, plastic bags, foamed polystyrene, etc), should not be left within the reach of children, as they may prove harmful.

- Before any cleaning or servicing operation, disconnect the unit from the mains by turning the master switch OFF, and/or through the cut-out devices that are provided.
- Make sure that inlet or exhaust grilles are unobstructed.
- In case of breakdown and/or defective unit operation, disconnect the unit. Make no attempt to repair the unit or take any direct action.

Contact qualified personnel only.

Units shall be repaired exclusively by a servicing centre, duly authorised by the manufacturer, with original spare parts and accessories.

Failure to comply with the above instructions is likely to impair the unit's safety.

To ensure equipment efficiency and proper operation, it is essential that maintenance operations are performed by qualified personnel at regular intervals, following the manufacturer's instructions.

- When a decision is made to discontinue the use of the equipment, those parts likely to constitute sources of danger shall be made harmless.
- In case the equipment is to be sold or transferred to another user, or in case the original user should move and leave the unit behind, make sure that these instructions accompany the equipment at all times so that they can be consulted by the new owner and/or the installer.
- This unit shall be employed exclusively for the use for which it is meant. Any other use shall be considered as improper and, therefore, dangerous.

The manufacturer shall not be held liable, by agreement or otherwise, for damages resulting from improper installation, use and failure to comply with the instructions supplied by the manufacturer.The occurrence of any of the following circustances may cause explosions, polluting unburnt gases (example: carbon monoxide CO), burns, serious harm to people, animals and things:

- Failure to comply with one of the WARNINGS in this chapter
- Incorrect handling, installation, adjustment or maintenance of the burner
- Incorrect use of the burner or incorrect use of its parts or optional supply

2) SPECIAL INSTRUCTIONS FOR BURNERS

- The burner should be installed in a suitable room, with ventilation openings complying with the requirements of the regulations in force, and sufficient for good combustion.
- Only burners designed according to the regulations in force should be used.
- This burner should be employed exclusively for the use for which it was designed.
- Before connecting the burner, make sure that the unit rating is the same as delivery mains (electricity, gas oil, or other fuel).
- Observe caution with hot burner components. These are, usually, near to the flame and the fuel pre-heating system, they become hot during the unit operation and will remain hot for some time after the burner has stopped.

When the decision is made to discontinue the use of the burner, the user shall have qualified personnel carry out the following operations:

a Remove the power supply by disconnecting the power cord from the mains.

b Disconnect the fuel supply by means of the hand-operated shut-off valve and remove the control handwheels from their spindles.

Special warnings

- Make sure that the burner has, on installation, been firmly secured to the appliance, so that the flame is generated inside the appliance fire-box.
- Before the burner is started and, thereafter, at least once a year, have qualified personnel perform the following operations:

a set the burner fuel flow rate depending on the heat input of the appliance;

b set the flow rate of the combustion-supporting air to obtain a combustion efficiency level at least equal to the lower level required by the regulations in force;

c check the unit operation for proper combustion, to avoid any harmful or polluting unburnt gases in excess of the limits permitted by the regulations in force;

d make sure that control and safety devices are operating properly;

e make sure that exhaust ducts intended to discharge the products of combustion are operating properly;

f on completion of setting and adjustment operations, make sure that all mechanical locking devices of controls have been duly tightened;

g make sure that a copy of the burner use and maintenance instructions is available in the boiler room.

- In case of a burner shut-down, reser the control box by means of the RESET pushbutton. If a second shut-down takes place, call the Technical Service, **without trying to RESET further**.
- The unit shall be operated and serviced by qualified personnel only, in compliance with the regulations in force.

3) GENERAL INSTRUCTIONS DEPENDING ON FUEL USED

3a) ELECTRICAL CONNECTION

- For safety reasons the unit must be efficiently earthed and installed as required by current safety regulations.
- It is vital that all saftey requirements are met. In case of any doubt, ask for an accurate inspection of electrics by qualified personnel, since the manufacturer cannot be held liable for damages that may be caused by failure to correctly earth the equipment.
- Qualified personnel must inspect the system to make sure that it is adequate to take the maximum power used by the equipment shown on the equipment rating plate. In particular, make sure that the system cable cross section is adequate for the power absorbed by the unit.
- No adaptors, multiple outlet sockets and/or extension cables are permitted to connect the unit to the electric mains.
- An omnipolar switch shall be provided for connection to mains, as required by the current safety regulations.
- The use of any power-operated component implies observance of a few basic rules, for example:
  - do not touch the unit with wet or damp parts of the body and/or with bare feet;
  - do not pull electric cables;
  - do not leave the equipment exposed to weather (rain, sun, etc.) unless expressly required to do so;
  - do not allow children or inexperienced persons to use equipment;
- The unit input cable shall not be replaced by the user.
  In case of damage to the cable, switch off the unit and contact qualified personnel to replace.
  When the unit is out of use for some time the electric switch supplying all the power-driven components in the system (i.e. pumps, burner, etc.) should be switched off.

3b) FIRING WITH GAS, LIGHT OIL OR OTHER FUELS

GENERAL

- The burner shall be installed by qualified personnel and in compliance with regulations and provisions in force; wrong installation can cause injuries to people and animals, or damage to property, for which the manufacturer cannot be held liable.
- Before installation, it is recommended that all the fuel supply system pipes be carefully cleaned inside, to remove foreign matter that might impair the burner operation.
- Before the burner is commissioned, qualified personnel should inspect the following:

a the fuel supply system, for proper sealing;
b the fuel flow rate, to make sure that it has been set based on the firing rate required of the burner;
c the burner firing system, to make sure that it is supplied for the designed fuel type;
d the fuel supply pressure, to make sure that it is included in the range shown on the rating plate;
e the fuel supply system, to make sure that the system dimensions are adequate to the burner firing rate, and that the system is equipped with all the safety and control devices required by the regulations in force.

- When the burner is to remain idle for some time, the fuel supply tap or taps should be closed.

SPECIAL INSTRUCTIONS FOR USING GAS

Have qualified personnel inspect the installation to ensure that:

a the gas delivery line and train are in compliance with the regulations and provisions in force;
b all gas connections are tight;
c the boiler room ventilation openings are such that they ensure the air supply flow required by the current regulations, and in any case are sufficient for proper combustion.

- Do not use gas pipes to earth electrical equipment.
- Never leave the burner connected when not in use. Always shut the gas valve off.
- In case of prolonged absence of the user, the main gas delivery valve to the burner should be shut off.

Precautions if you can smell gas

a do not operate electric switches, the telephone, or any other item likely to generate sparks;
b immediately open doors and windows to create an air flow to purge the room;
c close the gas valves;
d contact qualified personnel.

- Do not obstruct the ventilation openings of the room where gas appliances are installed, to avoid dangerous conditions such as the development of toxic or explosive mixtures.

DIRECTIVES AND STANDARDS

Gas burners

European directives

-Regulation 2016/426/UE (appliances burning gaseous fuels)
-2014/35/UE (Low Tension Directive)
-2014/30/UE (Electromagnetic compatibility Directive)
-2006/42/EC (Machinery Directive)

Harmonized standards

-UNI EN 676 (Automatic forced draught burners for gaseous fuels)
-EN 55014-1 (Electromagnetic compatibility- Requirements for house hold appliances, electric tools and similar apparatus)
-EN 60204-1:2006 (Safety of machinery – Electrical equipment of machines.)
-CEI EN 60335-1 (Specification for safety of household and similar electrical appliances);
-CEI EN 60335-2-102 (Household and similar electrical appliances. Safety. Particular requirements for gas, oil and solid-fuel burning appliances having electrical connections).
-UNI EN ISO 12100:2010 (Safety of machinery - General principles for design - Risk assessment and risk reduction);

Light oil burners

European directives

-2014/35/UE (Low Tension Directive)
-2014/30/UE (Electromagnetic compatibility Directive)
-2006/42/EC (Machinery Directive)

Harmonized standards

-UNI EN 267-2011(Automatic forced draught burners for liquid fuels)
-EN 55014-1 (Electromagnetic compatibility- Requirements for house hold appliances, electric tools and similar apparatus)
-EN 60204-1:2006 (Safety of machinery – Electrical equipment of machines.)
-CEI EN 60335-1 (Specification for safety of household and similar electrical appliances);
-CEI EN 60335-2-102 (Household and similar electrical appliances. Safety. Particular requirements for gas, oil and solid-fuel burning appliances having electrical connections).
-UNI EN ISO 12100:2010 (Safety of machinery - General principles for design - Risk assessment and risk reduction);

Heavy oil burners

European Directives

-2014/35/UE (Low Tension Directive)
-2014/30/UE (Electromagnetic compatibility Directive)
-2006/42/EC (Machinery Directive)

Harmonized standards

-UNI EN 267(Automatic forced draught burners for liquid fuels)
-EN 55014-1 (Electromagnetic compatibility- Requirements for house hold appliances, electric tools and similar apparatus)
-EN 60204-1:2006 (Safety of machinery – Electrical equipment of machines.)
-CEI EN 60335-1 (Specification for safety of household and similar electrical appliances);
-CEI EN 60335-2-102 (Household and similar electrical appliances. Safety. Particular requirements for gas, oil and solid-fuel burning appliances having electrical connections).
-UNI EN ISO 12100:2010 (Safety of machinery - General principles for design - Risk assessment and risk reduction);

Gas - Light oil burners

European Directives

-Regulation 2016/426/UE (appliances burning gaseous fuels)
-2014/35/UE (Low Tension Directive)
-2014/30/UE (Electromagnetic compatibility Directive)
-2006/42/EC (Machinery Directive)

Harmonized standards

-UNI EN 676 (Automatic forced draught burners for gaseous fuels)
-UNI EN 267(Automatic forced draught burners for liquid fuels)
-EN 55014-1 (Electromagnetic compatibility- Requirements for house hold appliances, electric tools and similar apparatus)
-EN 60204-1:2006 (Safety of machinery – Electrical equipment of machines.)
-CEI EN 60335-1 (Specification for safety of household and similar electrical appliances);
-CEI EN 60335-2-102 (Household and similar electrical appliances. Safety. Particular requirements for gas, oil and solid-fuel burning appliances having electrical connections).
-UNI EN ISO 12100:2010 (Safety of machinery - General principles for design - Risk assessment and risk reduction);

Gas - Heavy oil burners

European directives:

-Regulation 2016/426/UE (appliances burning gaseous fuels)
-2014/35/UE (Low Tension Directive)
-2014/30/UE (Electromagnetic compatibility Directive)
-2006/42/EC (Machinery Directive)

Harmonized standards

-UNI EN 676 (Automatic forced draught burners for gaseous fuels)
-EN 55014-1 (Electromagnetic compatibility- Requirements for house hold appliances, electric tools and similar apparatus)
-EN 60204-1:2006 (Safety of machinery – Electrical equipment of machines.)
-CEI EN 60335-1 (Specification for safety of household and similar electrical appliances);
-CEI EN 60335-2-102 (Household and similar electrical appliances. Safety. Particular requirements for gas, oil and solid-fuel burning appliances having electrical connections).
-UNI EN ISO 12100:2010 (Safety of machinery - General principles for design - Risk assessment and risk reduction);

Industrial burners

European directives

-Regulation 2016/426/UE (appliances burning gaseous fuels)
-2014/35/UE (Low Tension Directive)
-2014/30/UE (Electromagnetic compatibility Directive)
-2006/42/EC (Machinery Directive)

Harmonized standards

-EN 55014-1 (Electromagnetic compatibility- Requirements for house hold appliances, electric tools and similar apparatus)
-EN 746-2 (Industrial thermoprocessing equipment - Part 2: Safety requirements for combustion and fuel handling systems)
-UNI EN ISO 12100:2010 (Safety of machinery - General principles for design - Risk assessment and risk reduction);
-EN 60204-1:2006 (Safety of machinery – Electrical equipment of machines.)
-EN 60335-2 (Electrical equipment of non-electric appliances for household and similar purposes. Safety requirements)

Burner data plate

For the following information, please refer to the data plate:

- burner type and burner model: must be reported in any communication with the supplier
- burner ID (serial number): must be reported in any communication with the supplier
- date of production (year and month)
- information about fuel type and network pressure

Type	--
Model	--
Year	--
S.Number	--
Output	--
Oil Flow	--
Fuel	--
Category	--
Gas Pressure	--
Viscosity	--
El.Supply	--
El.Consump.	--
Fan Motor	--
Protection	--
Drwaing n°	--
P.I.N.	--

SYMBOLS USED

WARNING! Failure to observe the warning may result in irreparable damage to the unit or damage to the environment

DANGER! Failure to observe the warning may result in serious injuries or death.

WARNING! Failure to observe the warning may result in electric shock with lethal consequences

Figures, illustrations and images used in this manual may differ in appearance from the actual product.

BURNER SAFETY

The burners - and the configurations described below - comply with the regulations in force regarding health, safety and the environment. For more in-depth information, refer to the declarations of conformity that are an integral part of this Manual.

DANGER! Incorrect motor rotation can seriously damage property and injure people.

Residual risks deriving from misuse and prohibitions

The burner has been built in order to make its operation safe; there are, however, residual risks.

Do not touch any mechanical moving parts with your hands or any other part of your body. Injury hazard
Do not touch any parts containing fuel (i.e. tank and pipes). Scalding hazard
Do not use the burner in situations other than the ones provided for in the data plate.
Do not use fuels other than the ones stated.
Do not use the burner in potentially explosive environments.
Do not remove or by-pass any machine safety devices.
Do not remove any protection devices or open the burner or any other component while the burner is running.
Do not disconnect any part of the burner or its components while the burner is running.
Untrained staff must not modify any linkages.

After any maintenance, it is important to restore the protection devices before restarting the machine.
All safety devices must be kept in perfect working order.
Personnel authorized to maintain the machine must always be provided with suitable protections.

ATTENTION: while running, the parts of the burner near the generator (coupling flange) are subject to overheating. Where necessary, avoid any contact risks by wearing suitable PPE.

PART I: INSTALLATION MANUAL

Burner model identification

Burners are identified by burner type and model. Burner model identification is described as follows.

Type	**KP60**	Model	**MP.**	**MD.**	**S.**	**.**	**A.**	**1.**	**65**
	(1)		**(2)**	**(3)**	**(4)**	**(5)**	**(6)**	**(7)**	**(8)**

(1) BURNER TYPE	**KP60 - KP72 - KP73**
(2) FUEL	M - Natural gas N - Heavy oil, viscosity <= 50cSt (7° E) @ 50° C D - Heavy oil, viscosity <= 400cSt (50° E) @ 50° C P - Petroleum, viscosity 89cSt (12° E) @ 50° C
(3) OPERATION	PR - Progressive MD - Fully modulating
(4) BLAST TUBE	S - Standard
(5) DESTINATION COUNTRY	* - see data plate
(6) BURNER VERSION	A - Standard
(7) EQUIPMENT	0 = 2 Gas valves 1 = 2 Gas valves + gas proving system 7 = 2 Gas valves+high gas pressure switch 8 = 2 Gas valves + gas proving system+high gas pressure switchl
(8) GAS CONNECTION	32 = Rp1”$_{1/4}$ 40 = Rp1”$_{1/2}$ 50 = Rp2” 65 = DN65 80 = DN80

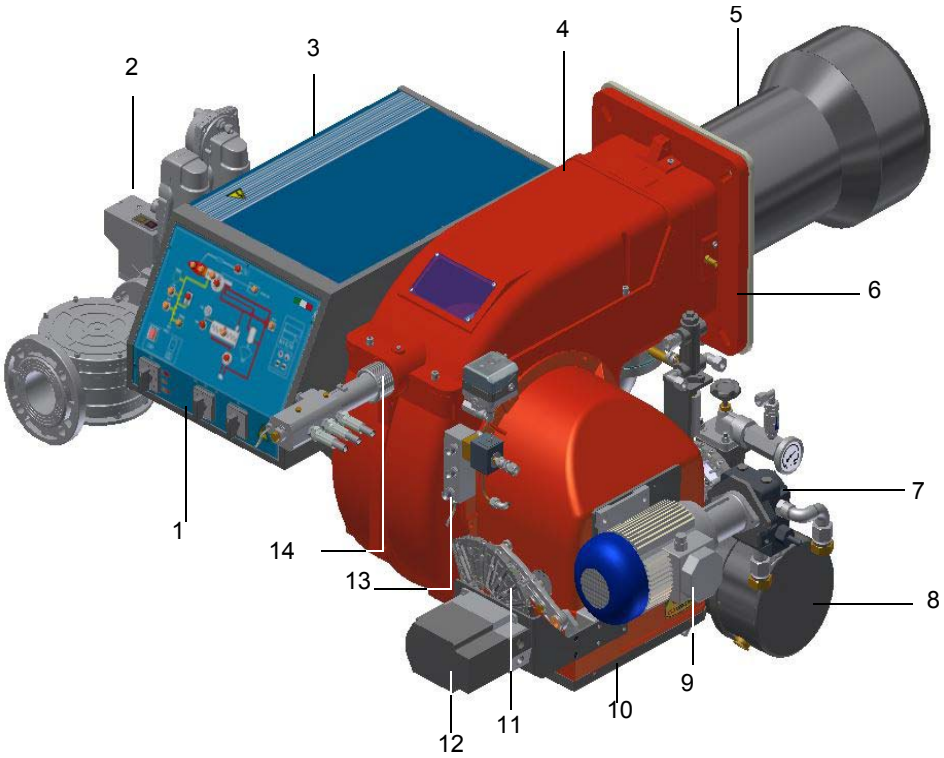

Note: the figure is indicative only

Keys

1 Mimic panel with startup switch
2 Gas train
3 Electrical panel
4 Cover
5 Blast tube - Combustion head
6 Flange
7 Pump
8 Preheater Tank
9 Motor Pump
10 Air intake
11 Adjusting cams
12 Actuator
13 Oil manifold
14 Head adjusting ring nut

Specifications

BURNERS		KP60
Output	min. kW - max. kW	160 - 880
Fuel		Natural gas - Heavy oil
Gas category		(see next paragraph)
Heavy oil viscosity		See “Burner model identification” table
Oil train inlet pressure	bar	2 max
Gas rate	min. - max. (Stm^3/h)	17 - 93
Gas pressure	min. - max. mbar	(Note2)
Heavy oil rate	min. - max. kg/h	14 - 77
Power supply		400V 3N ~ 50Hz
Total power consumption (Heavy oil)	kW	6.65
Total power consumption (Petroleum)	kW	3.65
Fan motor	kW	1.1
Pump motor	kW	0.55
Pre-heater resistors (heavy oil)	kW	4.5
Pre-heater resistors (Petroleum)	kW	1.5
Protection		IP40
Operation		Progressive - Fully modulating
Gas Train 32	Valves size/Gas connection	32 / Rp1”$_{1/4}$
Gas Train 40	Valves size/Gas connection	40 / Rp1”$_{1/2}$
Gas Train 50	Valves size/Gas connection	50 / Rp 2”
Gas Train 65	Valves size/Gas connection	65 / DN65
Operating temperature	°C	-10 ÷ +50
Storage temperature	°C	-20 ÷ +60
Working service *		Intermitent

Note1:	**All gas flow rates are referred to Stm^3/h (1013 mbar absolute pressure, 15 °C temperature) and are valid for G20 gas (net calorific value H_i = 34.02 MJ/Stm^3).**
Note2:	**Maximum gas pressure = 360mbar (with Dungs MBDLE/MBC valves)** **= 500mbar (with Dungs MBC or Siemens VGD gas valves).** **Minimum gas pressure = see gas curves.**

*** NOTE ON THE WORKING SERVICE: the control box automatically stops after 24h of continuous working. The control box immediately starts up, automatically.**

BURNERS		KP72 ..0.xx	KP72 ..1.xx	KP73
Output	min. kW - max. kW	330 - 1200	330 - 1550	320 - 2050
Fuel		Natural gas - Heavy oil		
Gas category		(see next paragraph)		
Heavy oil viscosity		See “Burner model identification” table		
Oil train inlet pressure	bar	2 max		
Gas rate	min. - max. (Stm^3/h)	35 - 127	35 - 164	34 - 217
Gas pressure	min. - max. mbar	(Note2)		
Heavy oil rate	min. - max. kg/h	29 - 107	29 - 138	28 - 179
Power supply		400V 3N ~ 50Hz		
Total power consumption (Heavy oil)	kW	11.25	11.25	16.6
Total power consumption (Petroleum)	kW	5.91	5.91	8.6
Fan motor	kW	2.2	2.2	3
Pump motor	kW	0.55	0.55	1.1
Pre-heater resistors (heavy oil)	kW	8	8	12
Pre-heater resistors (Petroleum)	kW	2.66	2.66	4
Protection		IP40		
Operation		Progressive - Fully modulating		
Gas Train 40	Valves size / Gas connection	40 / Rp1”$_{1/2}$	40 / Rp1”$_{1/2}$	-
Gas Train 50	Valves size / Gas connection	50 / Rp 2		
Gas Train 65	Valves size / Gas connection	65 / DN65		
Gas Train 80	Valves size / Gas connection	80 / DN80		
Operating temperature	°C	-10 ÷ +50		
Storage temperature	°C	-20 ÷ +60		
Working service		Intermitent		

Note1:	**All gas flow rates are referred to Stm^3/h (1013 mbar absolute pressure, 15 °C temperature) and are valid for G20 gas (net calorific value H_i = 34.02 MJ/Stm^3).**
Note2:	**Maximum gas pressure = 360mbar (with Dungs MBDLE/MBC valves)** **= 500mbar (with Dungs MBC or Siemens VGD gas valves).** **Minimum gas pressure = see gas curves.**

*** NOTE ON THE WORKING SERVICE: the control box automatically stops after 24h of continuous working. The control box immediately starts up, automatically.**

Country and usefulness gas categories

GAS CATEGORY	COUNTRY																								
I_{2H}	AT	ES	GR	SE	FI	IE	HU	IS	NO	CZ	DK	GB	IT	PT	CY	EE	LV	SI	MT	SK	BG	LT	RO	TR	CH
I_{2E}	LU	PL	-	-	-	-	-	-	-	-	-	-	-	-	-	-	-	-	-	-	-	-	-	-	-
$I_{2E(R)B}$	BE	-	-	-	-	-	-	-	-	-	-	-	-	-	-	-	-	-	-	-	-	-	-	-	-
I_{2L}	NL	-	-	-	-	-	-	-	-	-	-	-	-	-	-	-	-	-	-	-	-	-	-	-	-
I_{2ELL}	DE	-	-	-	-	-	-	-	-	-	-	-	-	-	-	-	-	-	-	-	-	-	-	-	-
I_{2Er}	FR	-	-	-	-	-	-	-	-	-	-	-	-	-	-	-	-	-	-	-	-	-	-	-	-

Overall dimensions - (mm)

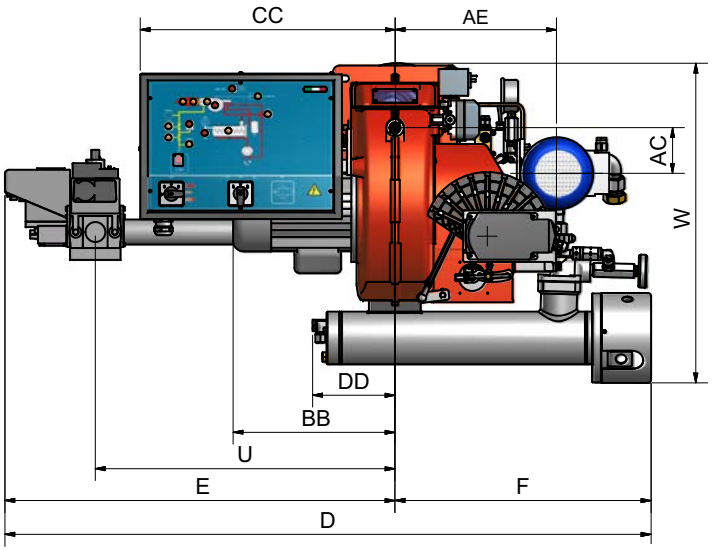

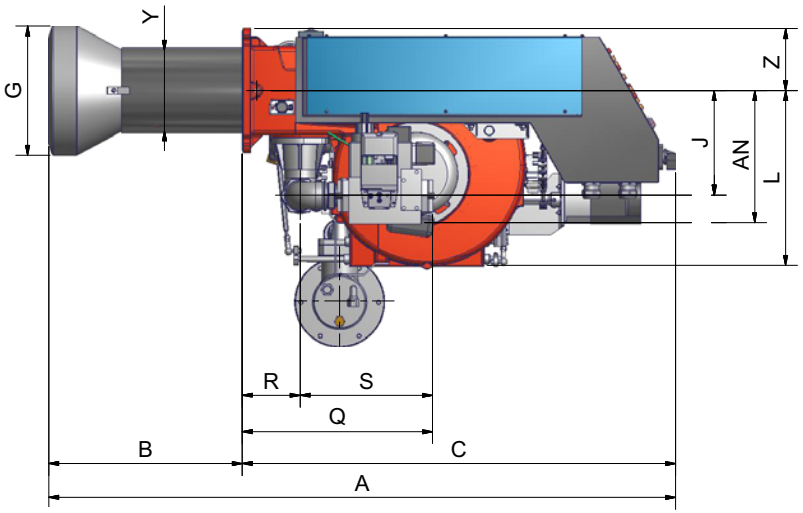

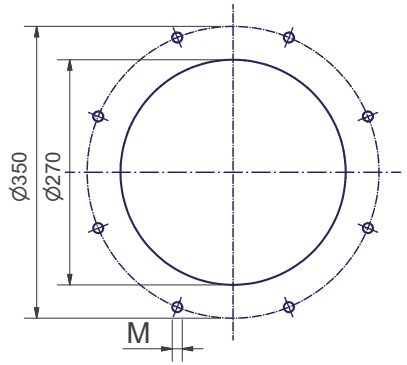

Boiler recommended drilling template

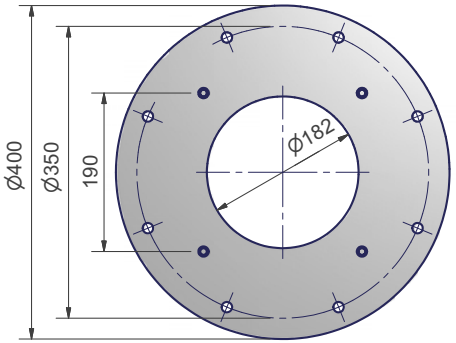

Reccomended counterflange

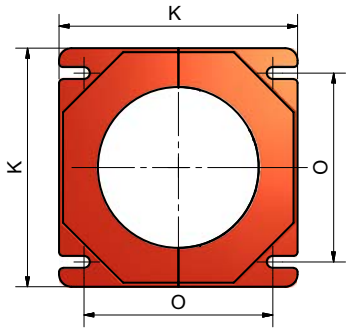

Burner flange

	*DN	A	AC	AE	AN	B	BB	C	CC	D	DD	E	F	G	J	K	L	M	O	Q	R	S	U	W	Y	Z
KP60	32	1213	89	313	256	374	314	839	493	1251	160	755	496	250	202	240	335	M12	190	368	112	256	580	619	156	120
	40	1213	89	313	256	374	314	839	493	1251	160	755	496	250	202	240	335	M12	190	439	112	327	580	619	156	120
	50	1213	89	313	256	374	314	839	493	1251	160	755	496	250	202	240	335	M12	190	447	112	335	580	619	156	120
	65	1213	89	313	256	374	314	839	493	1436	160	774	496	250	202	240	335	M12	190	515	112	403	560	619	156	120

A COUNTERFLANGE IS MANDATORY:a gasket must be placed between the generator and the counterflange

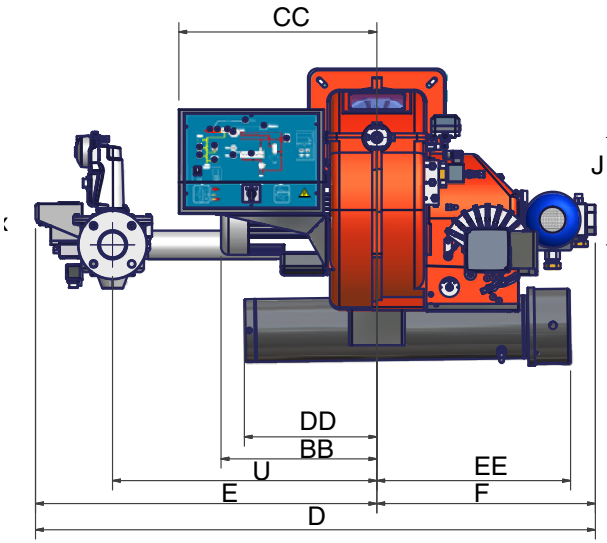

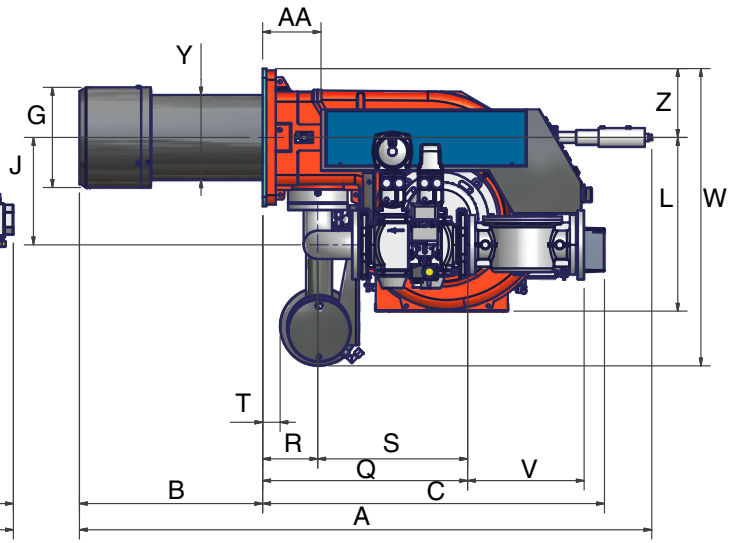

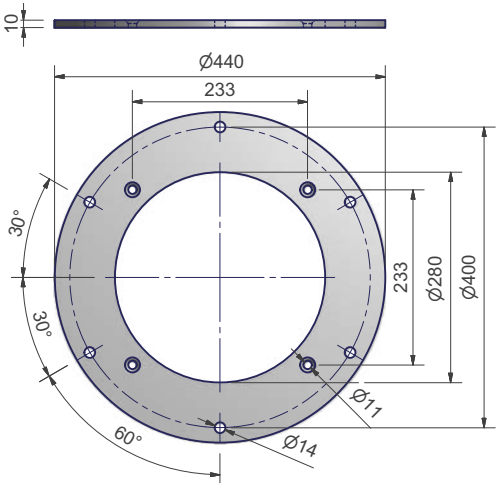

Reccomended counterflange

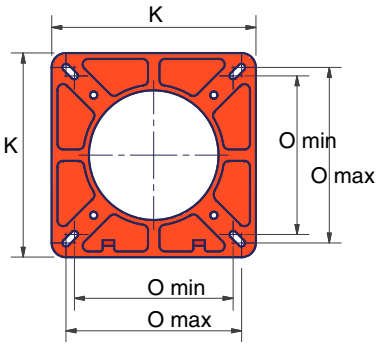

Burner flange

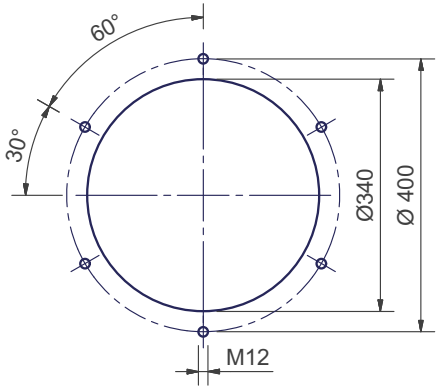

Boiler recommended drilling template

	*DN	A	AA	B	BB	C	CC	D	DD	E	EE	F	G	H	J	K	L	M	Omin	Omax	Q	R	S	T	U	V	W	Y	Z
KP72 xx-...0.	50	1299	-	505	-	794	-	1100	-	580	-	520	300	340	230	300	-	M12	216	250	-	-	-	-	-	-	-	211	-
KP72 xx-...0.	65	1299	-	505	-	794	-	1230	-	710	-	520	300	340	265	300	-	M12	216	250	-	-	-	-	-	-	-	211	-
KP72 xx-...0.	80	1299	-	505	-	794	-	1245	-	725	-	520	300	340	265	300	-	M12	216	250	-	-	-	-	-	-	-	211	-
KP72 xx-...1.	50	1299	-	505	-	794	-	1225	-	705	-	520	300	340	230	300	-	M12	216	250	-	-	-	-	-	-	-	211	-
KP72 xx-...1.	65	1299	-	505	-	794	-	1340	-	810	-	520	300	340	265	300	-	M12	216	250	-	-	-	-	-	-	-	211	-
KP72 xx-...1.	80	1299	-	505	-	794	-	1345	-	825	-	520	300	340	265	300	-	M12	216	250	-	-	-	-	-	-	-	211	-

*DN = gas valves size

A COUNTERFLANGE IS MANDATORY:a gasket must be placed between the generator and the counterflange

NOTE: the overall dimensions are referred to burners provided with Siemens VGD valves.

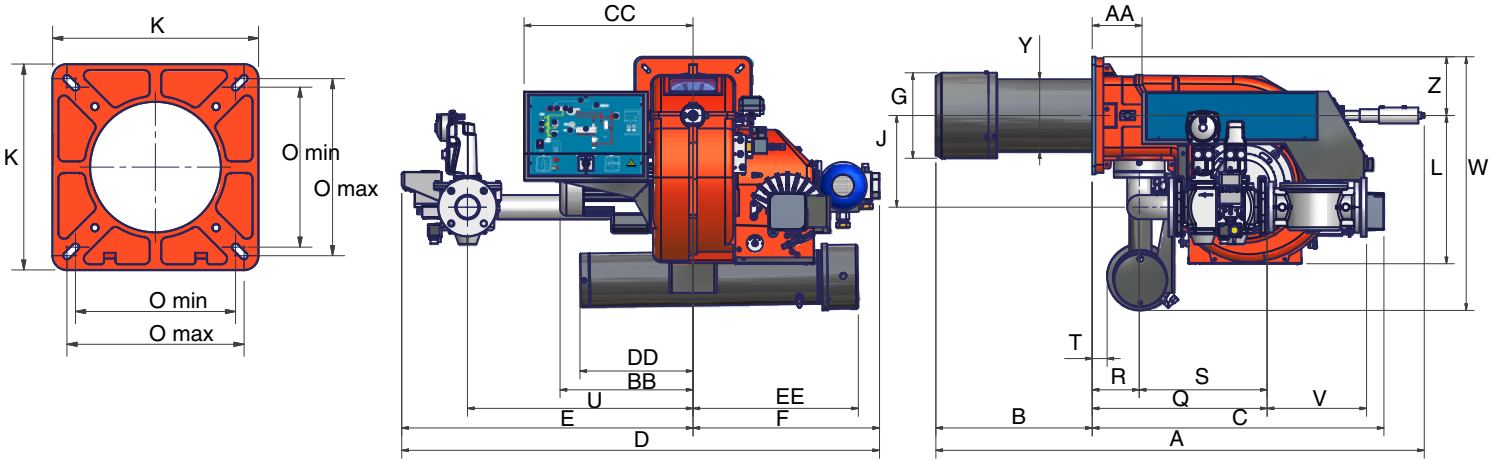

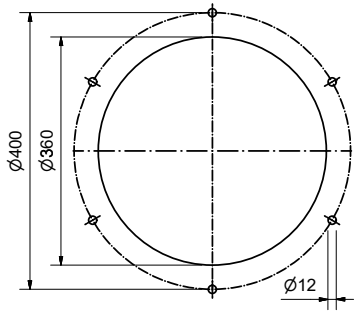

Boiler recommended drilling template

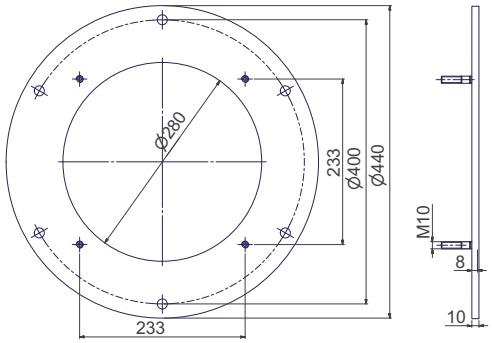

Reccomended counterflange

	DN	A	AA	B	BB	C	CC	D	DD	E	EE	F	G	J	K	L	M	Omin	Omax	Q	R	S	T	U	V	W	Y	Z
KP73	50	1320	140	469	373	800	495	1378	475	838	400	540	320	226	300	375	M10	216	250	400	130	270	10	610	216	635	198	150
KP73	65	1320	140	469	373	800	495	1302	475	762	400	540	320	275	300	375	M10	216	250	400	130	270	10	565	313	635	198	150
KP73	80	1320	140	469	373	800	495	1308	475	764	400	540	320	275	300	375	M10	216	250	400	130	270	10	565	344	635	198	150

*DN = gas valves size

NOTE: the overall dimensions are referred to burners provided with Siemens VGD valves.

ATTENTION: the counterflange is an optional supplied only on request. A gasket must be placed between the generator and the counterflange

Fig. 1 3I2MD11 v1 **Hydraulic diagram**

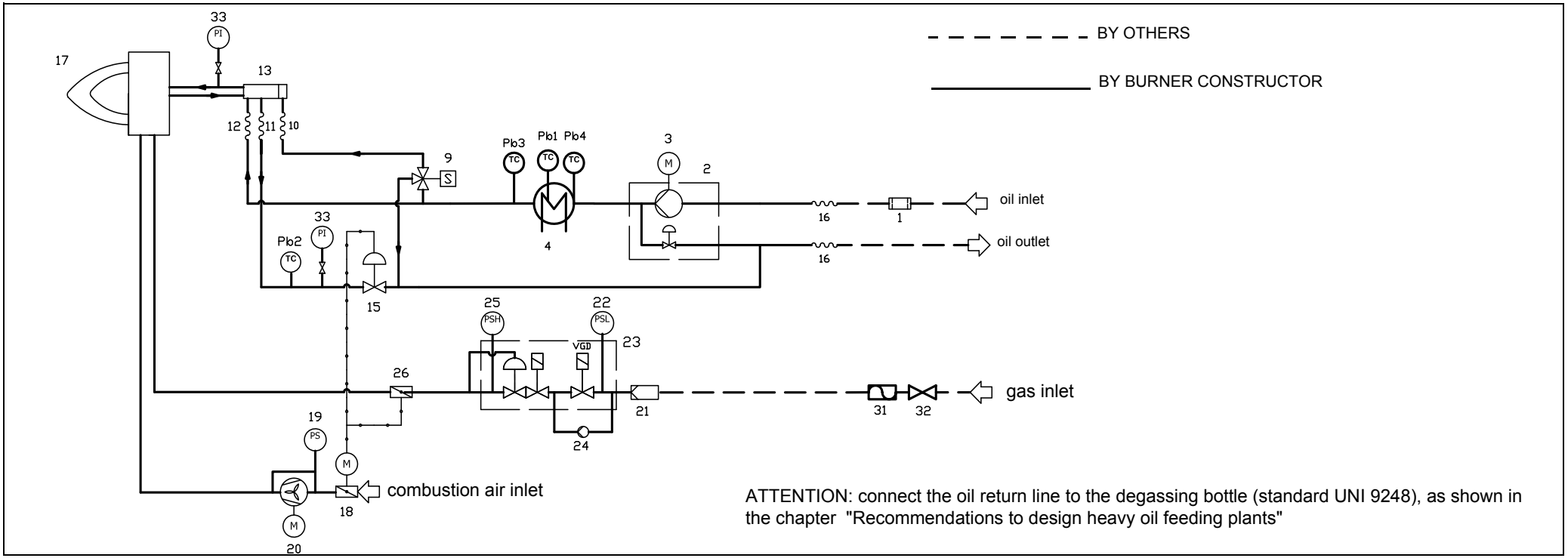

NOTE: POS 25, POS 31, POS 32, POS 33 are optional supply

POS	OIL TRAIN		COMBUSTION AIR TRAIN
1	Filter	18	Air damper with actuator
2	Pump and pressure governor	19	Pressure switch - PA
3	Electrical motor	20	Draught fan with electromotor
33	Pressure gauge with manual valve		**MAIN GAS TRAIN**
4	Electrical preheater tank	21	Filter
Pb4	Temperature probe	22	Pressure switch - PGMIN
Pb1	Temperature probe	23	Safety valve with built in gas governor
Pb3	Temperature probe	24	Proving system
9	3-way solenoid valve	25	Pressure switch - PGMAX
10	Flexible hose	26	Butterfly valve
11	Flexible hose	31	Bellows unit
Pb2	Temperature probe	32	Manual valve
13	Oil distributor		
14	Low thermostat - TCI		
15	Pressure governor		
16	Flexible hose		
17	Burner		

The following items are included only on certain types of burner: 10, 11, 12

Fig. 2 - 3I2MD21 v1 **Hydraulic diagram**

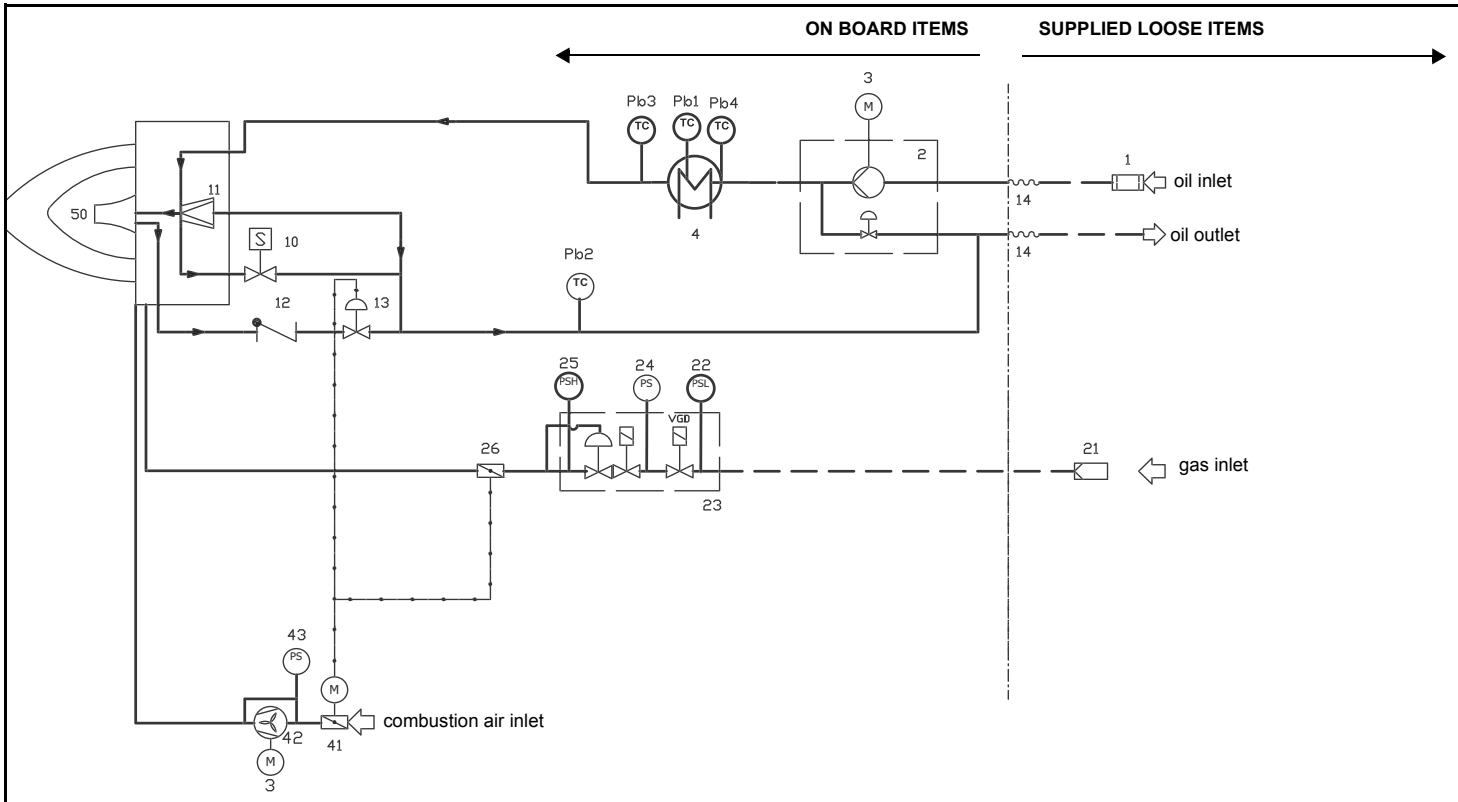

	LEGEND
POS	**OIL TRAIN**
1	Filter
2	Pump and pressure governor
3	Electrical motor
4	Electrical preheater tank
Pb4	Temperature probe
Pb1	Temperature probe
Pb3	Temperature probe
10	Solenoid valve
11	Nozzle shut off needle
Pb2	Temperature probe
12	One way valve
13	Pressure governor
14	Flexible hose
	COMBUSTION AIR TRAIN
41	Air damper with actuator
43	Pressure switch - PA
42	Draught fan with electromotor
	MAIN GAS TRAIN
21	Filter
22	Pressure switch - PGMIN
23	Safety valve with built in gas governor
24	Proving system pressure switch - PGCP
25	Pressure switch - PGMAX
26	Butterfly valve
26	Pressure switch - PGMIN
27	Safety valve with built in gas governor
28	Pressure switch - PGMIN
29	Proving system pressure switch - PGCP
30	Pressure switch - PGMAX
NOTE	POS 25,30 are optional supply

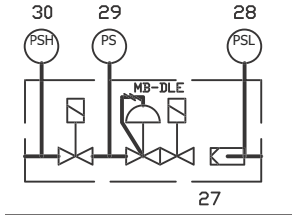

.According to the gas train size and the burner type MB-DLE safety valves are supplied. See the drawing on the left.

- - - - - - BY OTHERS

_____ BY BURNER CONSTRUCTOR

ATTENTION: connect the oil return line to the degassing bottle (standard UNI 9248), as shown in the chapter "Recommendations to design heavy oil feeding plants"

Performance curves

KP60

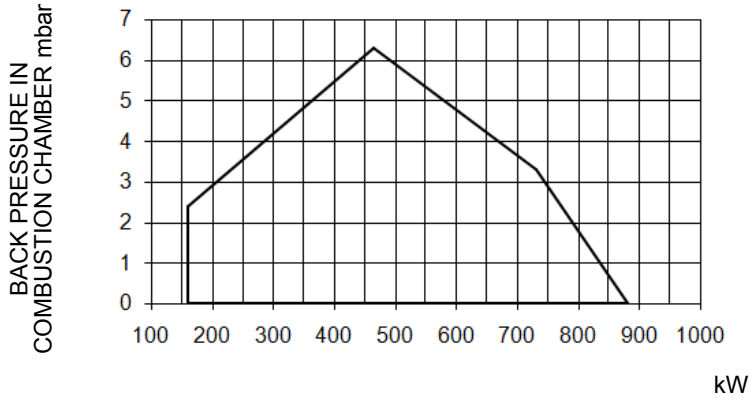

KP72 ...0.xx

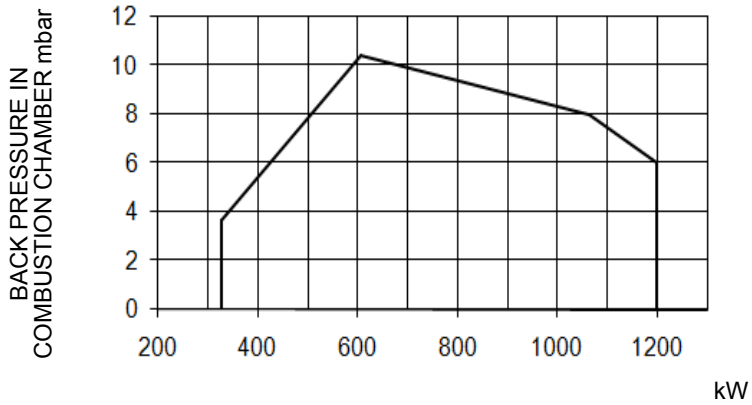

KP72 ...1.xx

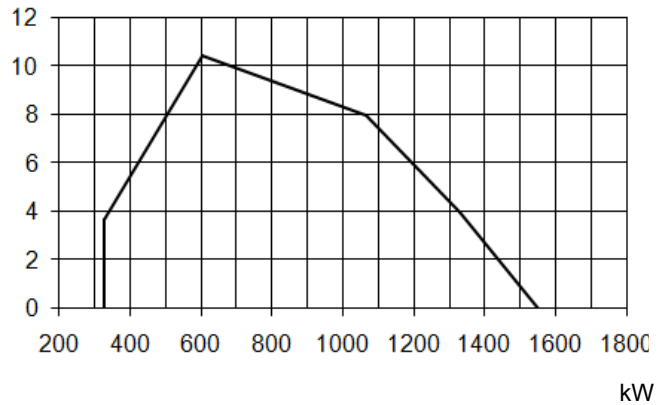

KP73

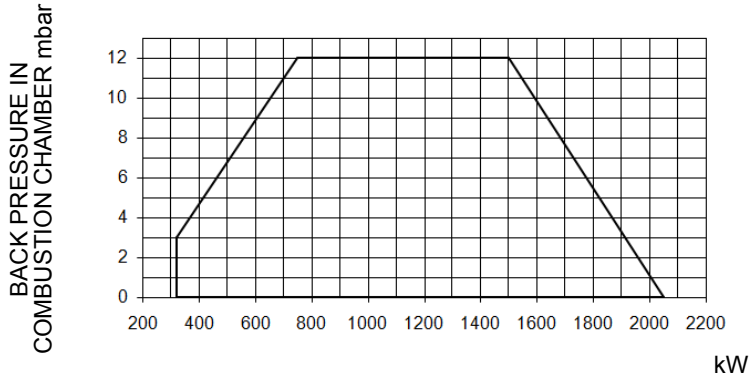

To get the output in kcal/h, multiply value in kW by 860.

Data are referred to standard conditions: atmospheric pressure at 1013mbar, ambient temperature at 15°C.

NOTE: The performance curve is a diagram that represents the burner performance in the type approval phase or in the laboratory tests, but does not represent the regulation range of the machine. On this diagram the maximum output point is usually reached by adjsuting the combustion head to its “MAX” position (see paragraph “Adjusting the combustion head”); the minimum output point is reached setting the combustion head to its “MIN” position. During the first ignition, the combustion head is set in order to find a compromise between the burner output and the generator specifications, that is why the minimum output may be different from the Performance curve minimum.

Pressure in the Network / gas flow rate curves

- ***Gas burners***

KP60

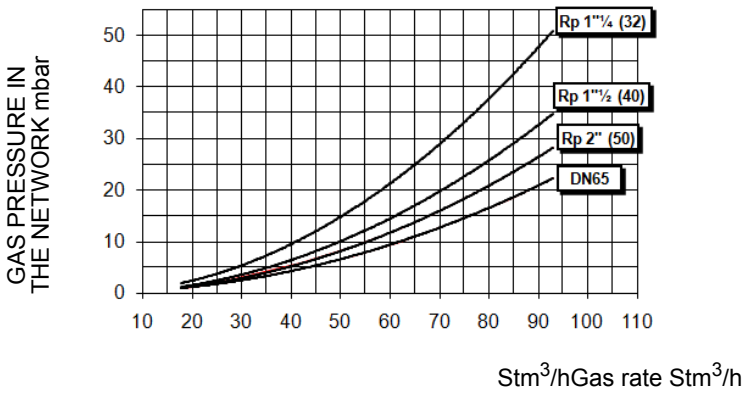

KP72 ...0.xx

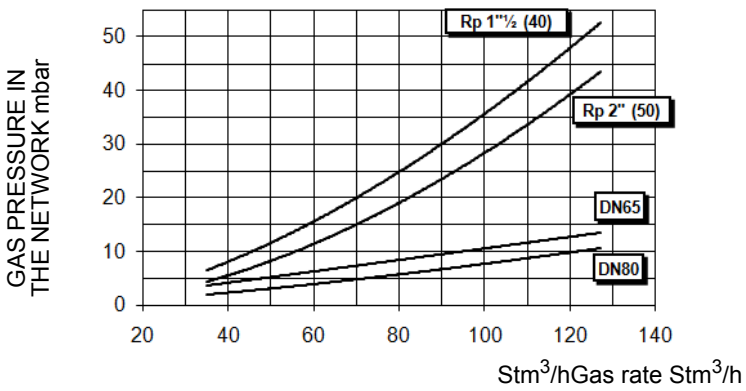

KP72 ...1.xx

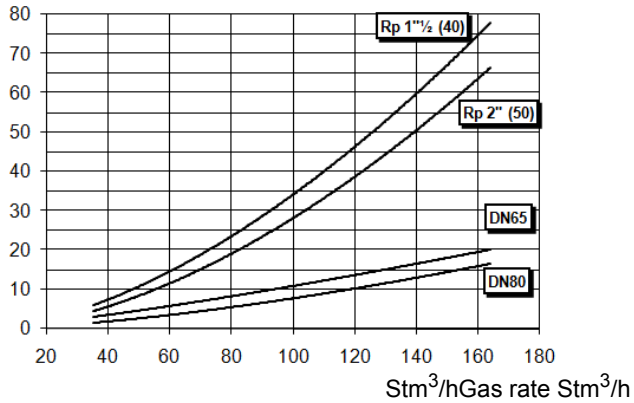

KP73

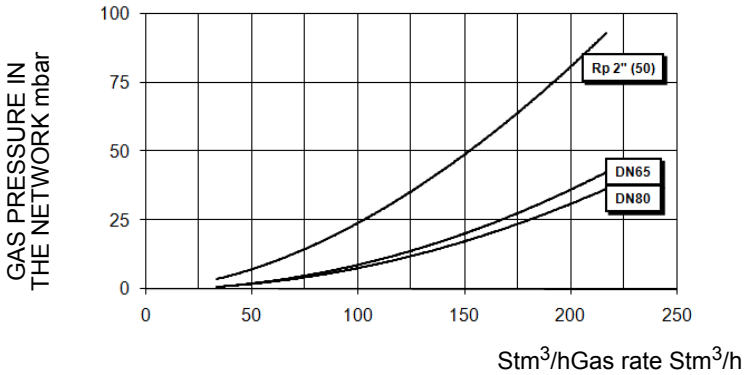

Caution: the gas rate value is quoted on the x-axis, the related network pressure is quoted on the y-axis (pressure value in the combustion chamber is not included). To know the minimum pressure at the gas train inlet, necessary to get the requested gas rate, add the pressure value in the combustion chamber to the value read on the y-axis.

Combustion head gas pressure curves depending on the flow rate

Curves are referred to pressure = 0mbar in the combustion head!

The curves referred to the gas pressure in the combustion head, depending on the gas flow rate, are referred to the burner properly adjusted (percentage of residual O_2 in the flues as shown in the "Recommended combustion values" table and CO in the standard limits). During this stage, the combustion head, the gas butterfly valve and the actuator are at the maximum opening. Refer to Fig. 3, showing the correct way to measure the gas pressure, considering the values of pressure in combustion chamber, surveyed by means of the pressure gauge or taken from the boiler's Technical specifications.

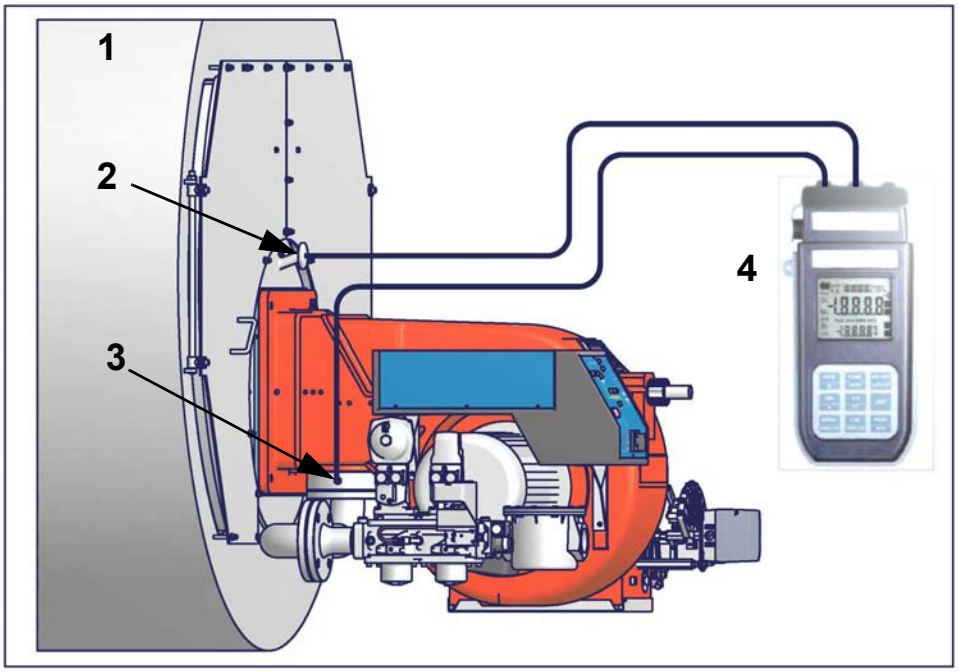

Fig. 3

Key

1 Generator
2 Pressure outlet on the combustion chamber
3 Gas pressure outlet on the butterfly valve
4 Differential pressure gauge

Measuring the gas pressure in the combustion head

In order to measure the pressure in the combustion head, insert the pressure gauge probes: one into the combustion chamber's pressure outlet to get the pressure in the combustion chamber and the other one into the butterfly valve's pressure outlet of the burner. On the basis of the measured differential pressure, it is possible to get the maximum flow rate: in the pressure - rate curves (showed on the next paragraph), it is easy to find out the burner's output in Stm^3/h (quoted on the x axis) from the pressure measured in the combustion head (quoted on the y axis). The data obtained must be considered when adjusting the gas flow rate.

NOTE: THE PRESSURE-RATE CURVES ARE GIVEN AS INFORMATION ONLY; FOR A PROPER SETTING OF THE GAS RATE, PLEASE REFER TO THE GAS METER READING.

Pressure in combustion head - gas rate curves

KP60 ...

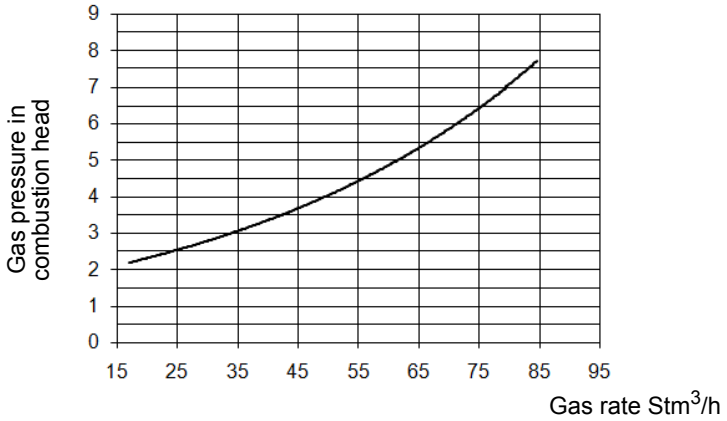

KP65

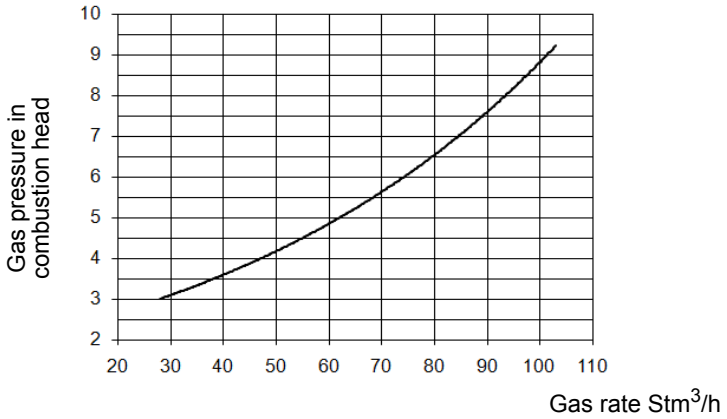

KP72

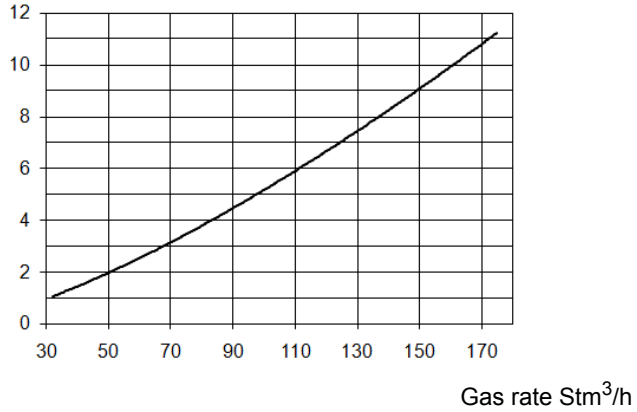

KP73

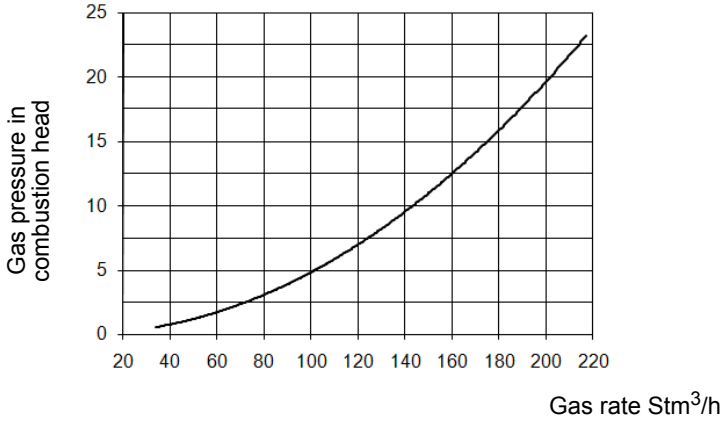

MOUNTINGS AND CONNECTIONS

Packing

The burners are despatched in cardboard boxes or wooden cages whose dimensions are:
1730mmx 1280mm x 1020mm (L x P x H)
Packing cases of this kind are affected by humidity and are not suitable for stacking. The following are placed in each packing case:

- burner with gas train detached;
- gasket to be inserted between the burner and the boiler;
- flexible oil pipes;
- oil filter;
- envelope containing this manual

To get rid of the burner's packing, follow the procedures laid down by current laws on disposal of materials.

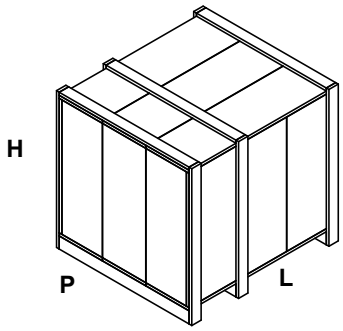

Handling the burner

⚠	**ATTENTION! The lhandling operations must be carried out by specialised and trained personnel. If these operations are not carried out correctly, the residual risk for the burner to overturn and fall down still persists.**
	To move the burner, use means suitable to support its weight (see paragraph "Technical specifications").
	The unpacked burner must be lifted and moved only by means of a fork lift truck.

The burner is mounted on a stirrup provided for handling the burner by means of a fork lift truck: the forks must be inserted into the A anb B ways. Remove the stirrup only once the burner is installed to the boiler.

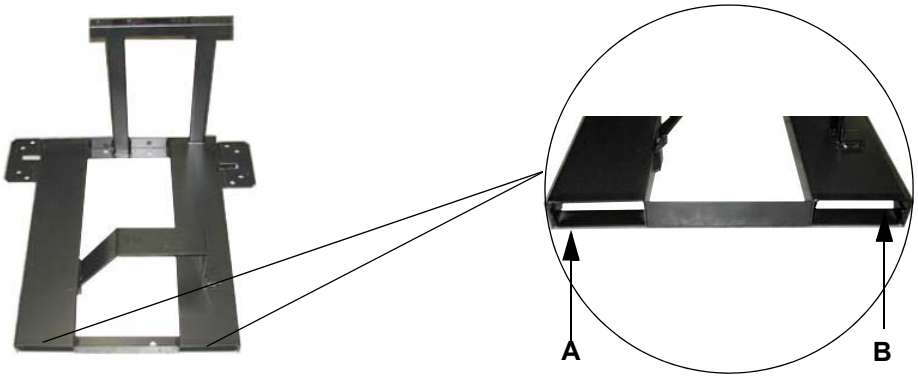

Fitting the burner to the boiler

To install the burner into the boiler, proceed as follows:

1 make a hole on the closing door of the combustion chamber as described on paragraph "Overall dimensions")
2 place the burner to the boiler: lift it up and handle it according to the procedure described on paragraph "Handling the burner";
3 place the stud bolts (5) on boiler's door, according to the burner drilling template described on paragraph "Overall dimensions";
4 fasten the stud bolts;
5 place the gasket on the burner flange;
6 install the burner into the boiler;
7 fix the burner to the stud bolts, by means of the fixing nuts, according to the next picture.
8 After fitting the burner to the boiler, ensure that the gap between the blast tube and the refractory lining is sealed with appropriate insulating material (ceramic fibre cord or refractory cement).

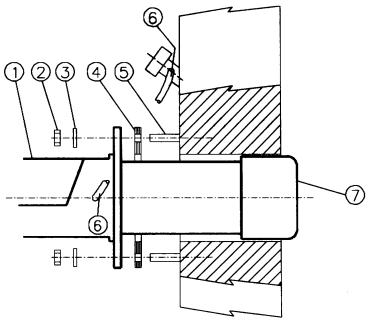

Keys
1 Burner
2 Fixing nut
3 Washer
4 Sealing gasket
5 Stud bolt
7 Blast tube

The burner is designed to work positioned according to the picture below. Set the upper side of the burner flange in a horizontal position, in order to find the correct inclination of the pre-heating tank. For different installations, please contact the Technical Department.

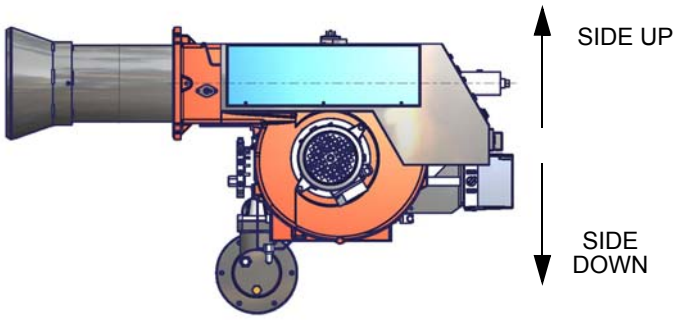

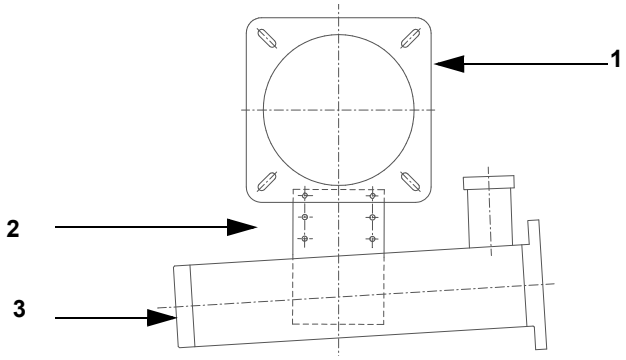

Key

1 Burner flange (upper side indicated)

2 Bracket

3 Pre-heating tank on the burner

GAS TRAIN CONNECTIONS

The diagrams show the components of the gas trai included in the delivery and which must be fitted by the installer.The diagrams are in compliance with the current laws.

WARNING: BEFORE EXECUTING THE CONNECTIONS TO THE GAS PIPE NETWORK, BE SURE THAT THE MANUAL CUTOFF VALVES ARE CLOSED.

Gas train with valves group MB-DLE (2 valves + gas filter + pressure governor) + VPS504 gas proving system

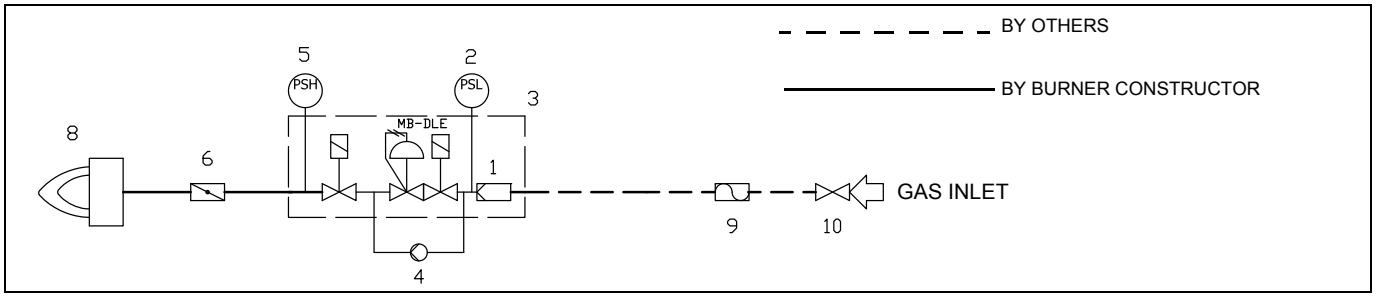

Gas train with valves group VGD with built-in gas pressure governor + gas proving system VPS504

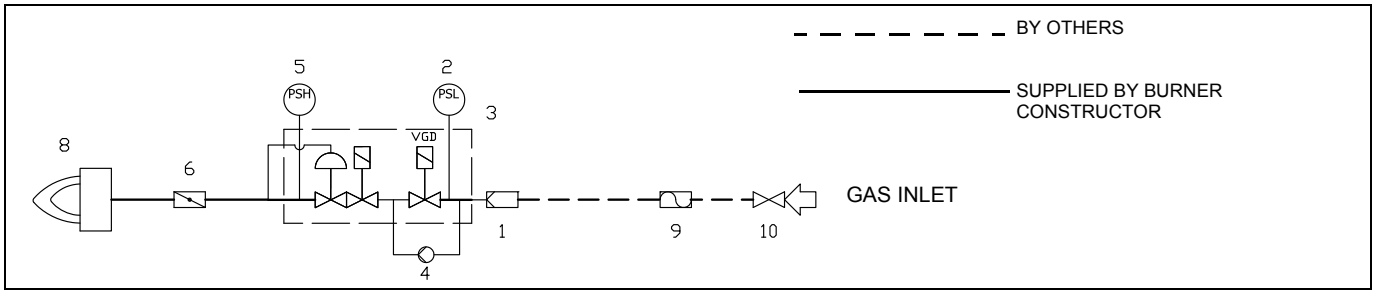

Key

1	Filter (*optional)	6	Butterfly valve
2	Pressure switch - PGMIN	8	Main burner
3	Safety valve with built in gas governor	9	Manual valve(*optional)
4	Proving system (*if provided)	10	Bellows unit(*optional)
5	Pressure switch - PGMAX (*optional)		

Assembling the gas grain

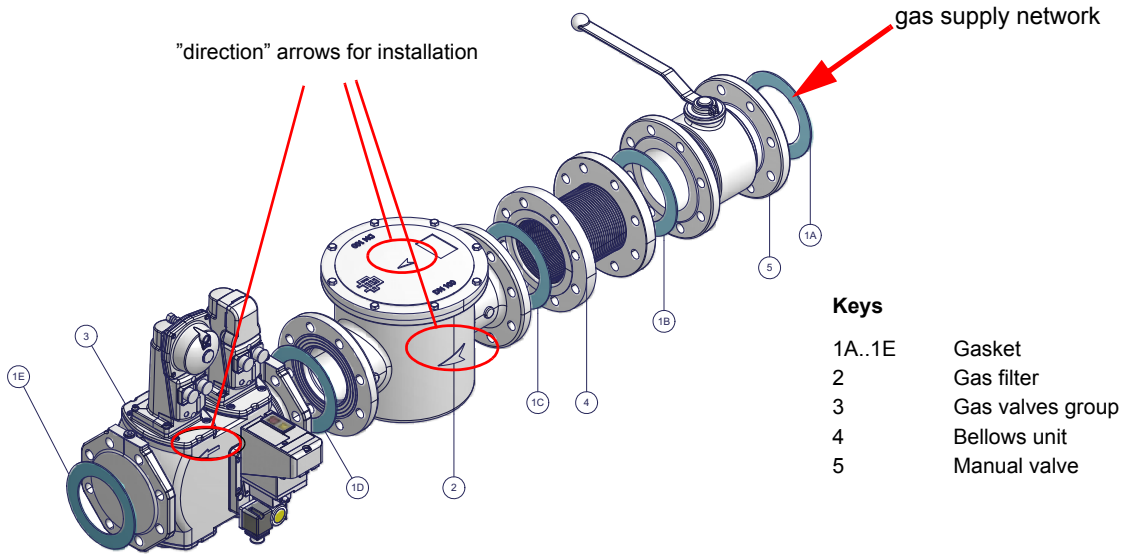

Fig. 4 - Example of gas train

To mount the gas train, proceed as follows:

1-a) in case of threaded joints: use proper seals according to the gas used;

1-b) in case of flanged joints: place a gasket (no. 1A..1E - Fig. 4) between the elements

NOTE: the bellows unit, the manual valve and the gaskets are not part of the standard supply.

⚠	**ATTENTION:** once the gas train is mounted according to the diagram on Fig. 4, the gas proving test mus be performed, according to the procedure set by the laws in force.

⚠ ***ATTENTION: it is recommended to mount filter and gas valves to avoid that extraneous material drops inside the valves, during maintenance and cleaning operation of the filters (both the filters outside the valves group and the ones built-in the gas valves).***

The procedures of installation fo the gas valves are showed in the next paragraphs, according to the gas train used:

- threaded gas trains with Multibloc Dungs MB-DLE or Siemens VGD20..
- flanged gas trains with Multibloc Dungs MB-DLE or Siemens VGD40..

MULTIBLOC DUNGS MB-DLE 415..420

Mounting

1. Loosen screws A and B **do not** unscrew (Fig. 5 - Fig. 6).
2. unscrew screws C and D (Fig. 5 - Fig. 6).
3. Remove MultiBloc between the threaded flanges (Fig. 6).
4. After mounting, perform leakage and functional tests.

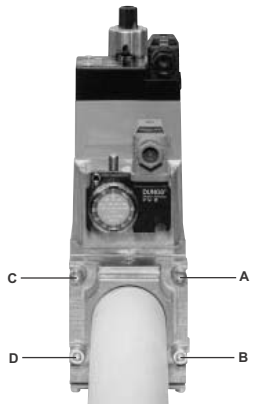

Fig. 5

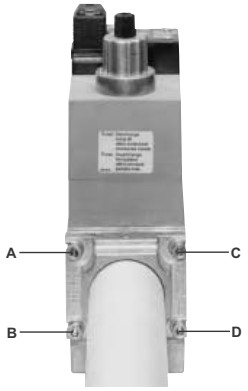

Fig. 6

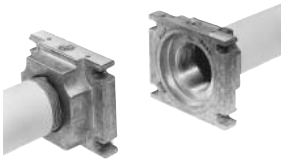

Fig. 7

MOUNTING POSITIONS

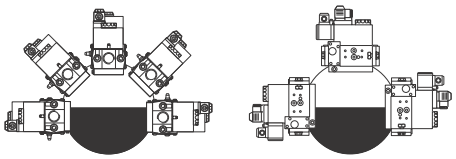

Fig. 8

Siemens VGD20.. and VGD40.. gas valves - with SKP2.. (pressure governor)

Mounting

- When mounting the VGD.. double gas valve, two flanges are required (as for VGD20.. model, the flanges are threaded); to prevent cuttings from falling inside the valve, first fit the flanges to the piping and then clean the associated parts;
- install the valve;
- the direction of gas flow must be in accordance with the direction of the arrow on the valve body;
- ensure that the bolts on the flanges are properly tightened;
- ensure that the connections with all components are tight;
- make certain that the O-rings and gaskets between the flanges and the double gas valve are fitted.
- Connect the reference gas pipe (**TP** in figure; 8mm-external size pipe supplied loose), to the gas pressure nipples placed on the gas pipe, downstream the gas valves: gas pressure must be measured at a distance that must be at least 5 times the pipe size.

Leave the blowhole free (**SA** in figure). Should the spring fitted not permit satisfactory regulation, ask one of our service centres for a suitable replacement.

Caution: the SKP2 diaphragm D must be vertical (see Fig. 12).

WARNING: removing the four screws BS causes the device to be unserviceable!

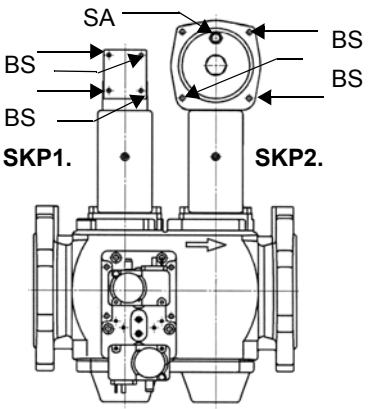

Fig. 9

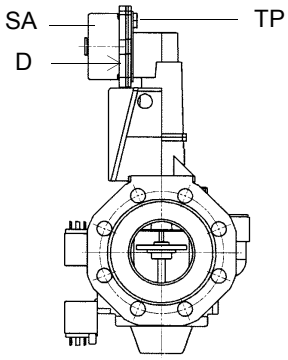

Fig. 10

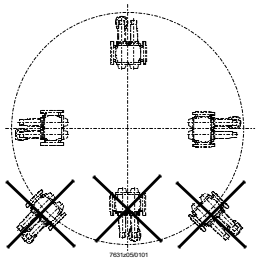

SIEMENS VGD..MOUNTING POSITIONS

Fig. 11

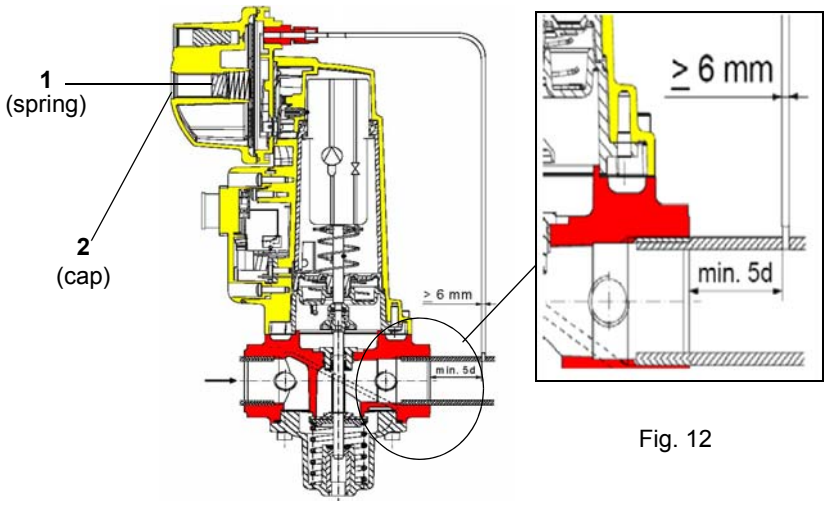

Fig. 12

Siemens VGD valves with SKP actuator:

The pressure adjusting range, upstream the gas valves group, changes according to the spring provided with the valve group.

Performance range (mbar)	0 - 22	15 - 120	100 - 250
Spring colour	neutral	yellow	red

Once the train is installed, connect electrically all its elements: gas valves group, pressure switches, gas proving system.

⚠	**ATTENTION:** once the gas train is mounted according to the diagram on Fig. 4, the gas proving test mus be performed, according to the procedure set by the laws in force.

Double-pipe and single-pipe system

The pumps that are used can be installed both into single-pipe and double-pipe systems.

Single-pipe system: a single pipe drives the oil from the tank to the pump's inlet. Then, from the pump, the pressurised oil is driven to the nozzle: a part comes out from the nozzle while the othe part goes back to the pump. In this system, the by-pass pulg, if provided, must be removed and the optional return port, on the pump's body, must be sealed by steel plug and washer.

Double-pipe system: as for the single pipe system, a pipe that connects the tank to the pump's inlet is used besides another pipe that connects the pum's return port to the tank, as well. The excess of oil goes back to the tank: this installation can be considered self-bleeding. If provided, the inside by-pass plug must be installed to avoid air and fuel passing through the pump.

Burners come out from the factory provided for double-stage systems. They can be suited for single-pipe system (recommended in the case of gravity feed) as decribed before.To change from a 1-pipe system to a 2-pipe-system, insert the by-pass plug **G** (as for ccw-rotation- referring to the pump shaft).

Caution: Changing the direction of rotation, all connections on top and side are reversed.

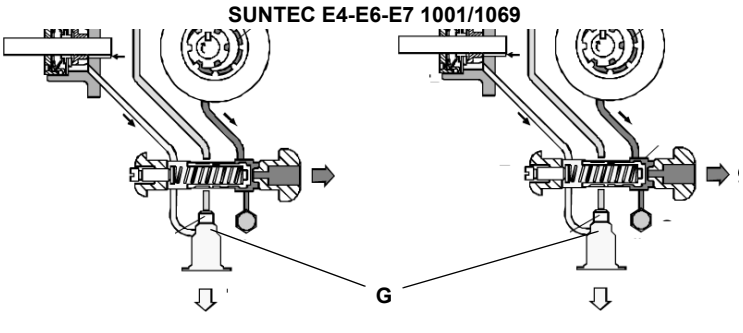

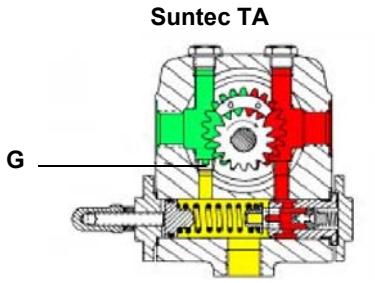

Bleed

Bleeding in two-pipe operation is automatic : it is assured by a bleed flat on the piston. In one-pipe operation, the plug of a pressure gauge port must be loosened until the air is evacuated from the system.

About the use of fuel pumps

- Make sure that the by-pass plug is not used in a single pipe installation, because the fuel unit will not function properly and damage to the pump and burner motor could result.
- Do not use fuel with additives to avoid the possible formation over time of compounds which may deposit between the gear teeth, thus obstructing them.
- After filling the tank, wait before starting the burner. This will give any suspended impurities time to deposit on the bottom of the tank, thus avoiding the possibility that they might be sucked into the pump.
- On initial commissioning a "dry" operation is foreseen for a considerable length of time (for example, when there is a long suction line to bleed). To avoid damages inject some lubrication oil into the vacuum inlet.
- Care must be taken when installing the pump not to force the pump shaft along its axis or laterally to avoid excessive wear on the joint, noise and overloading the gears.
- Pipes should not contain air pockets. Rapid attachment joint should therefore be avoided and threaded or mechanical seal junctions preferred. Junction threads, elbow joints and couplings should be sealed with removable sg component. The number of junctions should be kept to a minimum as they are a possible source of leakage.
- Do not use PTFE tape on the suction and return line pipes to avoid the possibility that particles enter circulation. These could deposit on the pump filter or the nozzle, reducing efficiency. Always use O-Rings or mechanical seal (copper or aluminium gaskets) junctions if possible.
- An external filter should always be installed in the suction line upstream of the fuel unit.

Oil pumps

KP60 - KP65 - KP72:

- **Pumps for heavy-oil viscosity up to 7° E at 50° C (burner model MN.)**

Suntec E4 - E6 - E7 1001	
Oil viscosity	2.8 ÷ 450 cSt
Oil temperature	0 ÷ 90°C
Inlet maximum pressure	1,5 bar
Maximum return pressure	1,5 bar
Minimum inlet pressure	- 0.45 to avoid gasing
Rotation speed max.	3600 rpm

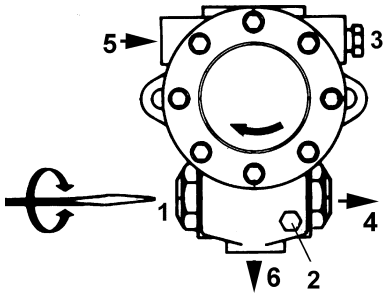

Pump : Suntec E

- **Pumps for heavy oil viscosity up to 50° E at 50° C (burner model MD.) or eco-heavy-oil viscosity 12 °E at 50°C (burner model ME.)**

Suntec E4 - E6 -E7 1069	
Oil viscosity	3 ÷ 75 cSt
Oil temperature	0 ÷ 130°C
Minimum inlet pressure	- 0.35 to avoid gasing
Inlet maximum pressure	3.5 bar
Maximum return pressure	3.5 bar
Rotation speed max.	3600 гртобор/мин

SUNTEC

1 Pressure governor
2 Pump pressure gauge
3 Vacuum pressure gauge
4 To the nozzle
5 Inlet
6 Return

Note: the 1069 pumps are fitted with mechanical seal and electric pre-heater (80 W).

KP73:

Suntec TA..	
Oil viscosity	3 ÷ 75 cSt
Oil temperature	0 ÷ 150°C
Min. suction pressure	- 0.45 bar to avoid gasing
Max. suction pressure	5 bar
Max. return pressure	5 bar
Rotation speed	3600 rpm max.

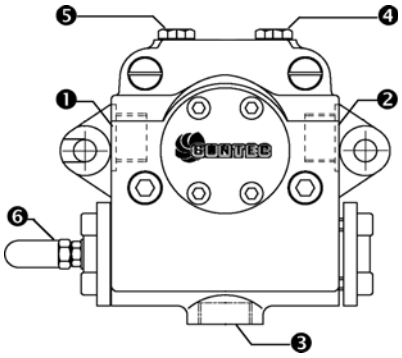

1 Inlet G1/2
2 To the nozzle G1/2
3 Return G1/2
4 Pressure gauge port G1/4
5 Vacuum gauge port G1/4
6 Pressure governor

Assembling the light oil flexible hoses

To connect the flexible light oil hoses to the pump, proceed as follows, according to the pump provided:

1 remove the closing nuts **A** and **R** on the inlet and return connections of the pump;

2 screw the rotating nut of the two flexible hoses on the pump **being careful to avoid exchanging the inlet and return lines**: see the arrows marked on the pump that show the inlet and the return (see prevoius paragraph).

Suntec E..	**Suntec TA..**

Connections to the oil gun (KP73)

1 Inlet
2 Return
3 Gun opening
4 Heating wire (only for high density oil burners)
5 Cartdrige-type heater (only for Ecoden or heavy oil burners)

Gun with the oil nozzle inside

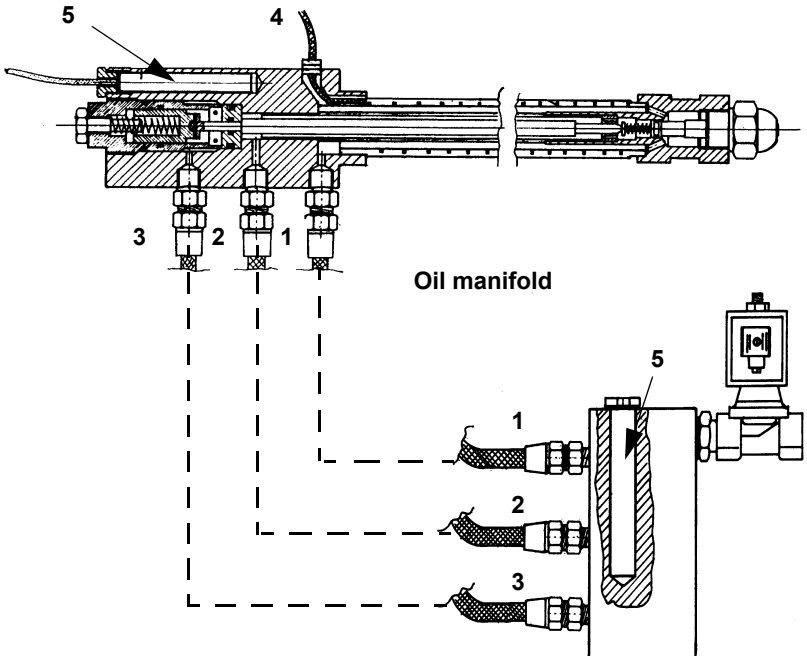

RECOMMENDATIONS TO DESIGN HEAVY OIL FEEDING PLANTS

This paragraph is intended to give some suggestions to make feeding plants for heavy oil burners. To get a regular burner operation, it is very important to design the supplying system properly. Here some suggestions will be mentioned to give a brief description.

The term “heavy oil” is generic and summarises several chemical-physical properties, above all viscosity. The excessive viscosity makes the oil impossible to be pumped, so it must be heated to let it flow in the pipeline; because of the low-boiling hydrocarbons and dissolved gases, the oil must be also pressurised. The pressurisation is also necessary to feed the burner pump avoiding its cavitation because of the high suction at the inlet. The supplying system scope is to pump and heat oil.

The oil viscosity is referred in various unit measures; the most common are: °E, cSt, Saybolt and Redwood scales. Table 3 shows the-various unit convertions (e.g.: 132 cSt viscosity corresponds to 17.5°E viscosity). The diagram in Fig. 13 shows how the heavy oil viscosity changes according to its temperature.

Example: an oil with 22°E viscosity at 50°C once heated to 100°C gets a 3 °E viscosity.As far as the pumping capability, it depends on the type of the pump that pushes the oil even if on diagram in Fig. 13 a generic limit is quoted at about 100 °E, so it is recommended to refer to the specifications of the pump provided. Usually the oil minimum temperature at the oil pump inlet increases as viscosity does, in order to make the oil easy to pump. Referring to the diagram on Fig. 14, it is possible to realise that to pump an oil with 50°E viscosity at 50°C, it must be heated at about 80°C.

Pipe heating system

Pipe heating system must be provided, that is a system to heat pipes and plant components to mantain the viscosity in the pumping limits. Higher the oil viscosity and lower the ambient temperature, more necessary the pipe heating system.

Inlet minimum pressure of the pump (both for supplying system and burner)

A very low pressure leads to cavitation (signalled by its peculiar noise): the pump manifacturer declares the minimum value. Therefore, check the pump technical sheets. By increasing the oil temperature, also the minimum inlet pressure at the pump must increase, to avoid the gassification of the oil low-boiling products and the cavitation. The cavitation compromises the burner operation, it causes the pump to break too. The diagram on Fig. 15 roughly shows the inlet pump pressure according to the oil temperature.

Pump operating maximum pressure (both for the supplying system and burner)

Remember that pumps and all the system components through which the oil circulates, feature an upper limit. Always read the technical documentation for each component. Schemes on Fig. 18 and Fig. 17 are taken from UNI 9248 "liquid fuel feeding lines from tank to burner" standard and show how a feeding line should be designed. For other countries, see related laws in force. The pipe dimensioning, the execution and the winding dimensioning and other construcitve details must be provided by the installer.

Adjusting the supplying oil ring

According to the heavy oil viscosity used, in the table below indicative temperature and pressure values to be set are shown.

Note: the temperature and pressure range allowed by the supplying ring components must be checked in the specifications table of the components themselves.

HEAVY OIL VISCOSITY AT 50 °C		PIPELINE PRESSURE	PIPELINE TEMPERATURE
cSt (°E)		bar	°C
	< 50 (7)	1- 2	20
> 50 (7)	< 110 (15)	1- 2	50
> 110 (15)	< 400 (50)	1- 2	65

Tab. 1

Viscosity units conversion table

Cinematics viscosity Centistokes (cSt)	Engler Degrees (°E)	Saybolt Seconds Universal (SSU)	Saybolt Seconds Furol (SSF)	Redwood Seconds no.1 (Standard)	Redwood Seconds no..2 (Admiralty)
1	1	31	--	29	--
2.56	1.16	35	--	32.1	--
4.3	1.31	40	--	36.2	5.1
7.4	1.58	50	--	44.3	5.83
10.3	1.88	60	--	52.3	6.77
13.1	2.17	70	12.95	60.9	7.6
15.7	2.45	80	13.7	69.2	8.44
18.2	2.73	90	14.44	77.6	9.3
20.6	3.02	100	15.24	85.6	10.12
32.1	4.48	150	19.3	128	14.48
43.2	5.92	200	23.5	170	18.9
54	7.35	250	28	212	23.45
65	8.79	300	32.5	254	28
87.6	11.7	400	41.9	338	37.1
110	14.6	500	51.6	423	46.2
132	17.5	600	61.4	508	55.4
154	20.45	700	71.1	592	64.6
176	23.35	800	81	677	73.8
198	26.3	900	91	762	83
220	29.2	1000	100.7	896	92.1
330	43.8	1500	150	1270	138.2
440	58.4	2000	200	1690	184.2
550	73	2500	250	2120	230
660	87.6	3000	300	2540	276
880	117	4000	400	3380	368
1100	146	5000	500	4230	461
1320	175	6000	600	5080	553
1540	204.5	7000	700	5920	645
1760	233.5	8000	800	6770	737
1980	263	9000	900	7620	829
2200	292	10000	1000	8460	921
3300	438	15000	1500	13700	--
4400	584	20000	2000	18400	--

Tab. 2

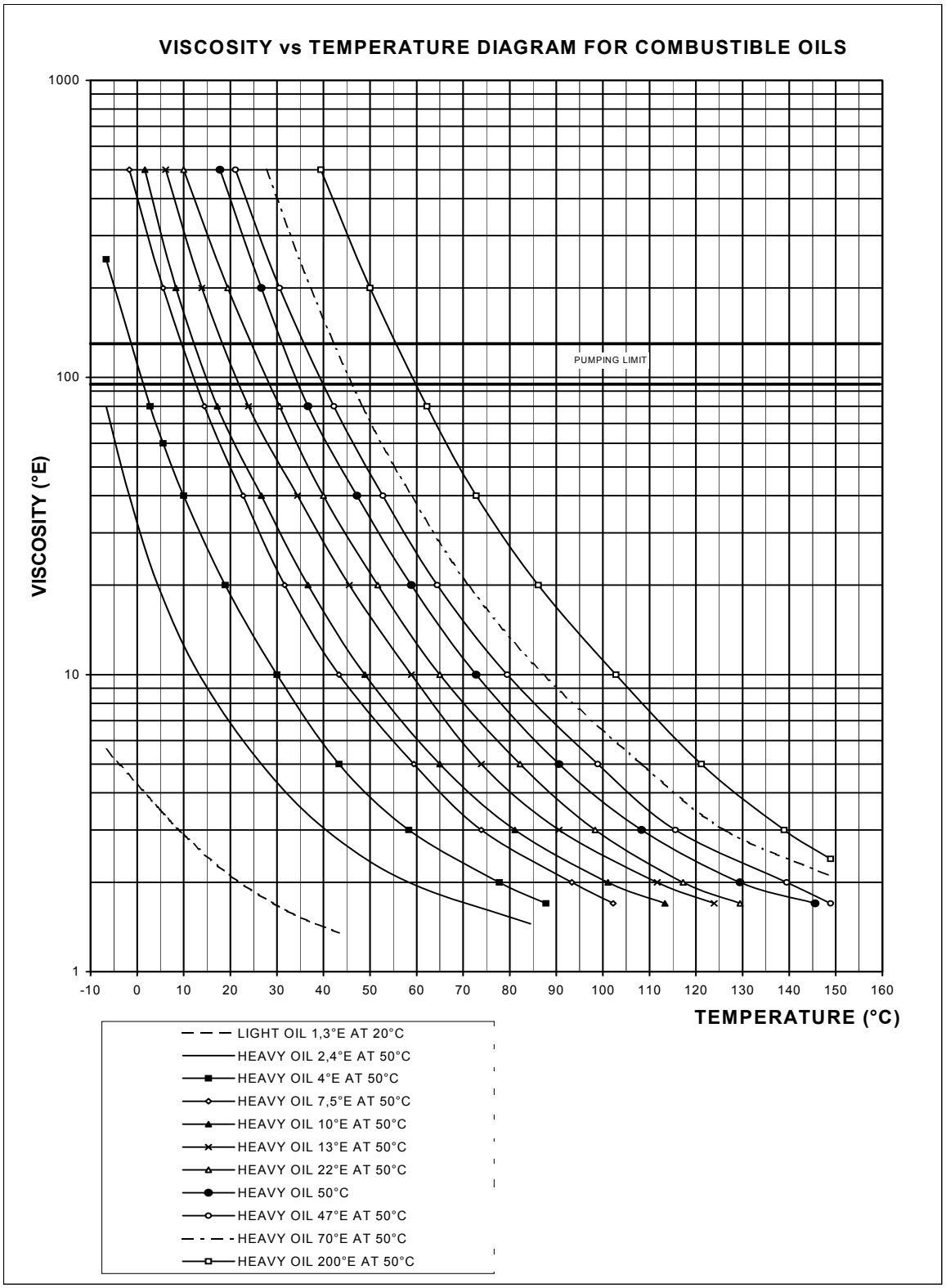
VISCOSITY vs TEMPERATURE DIAGRAM FOR COMBUSTIBLE OILS
VISCOSITY (°E)
1000
100
10
1
PUMPING LIMIT
-10
0
10
20
30
40
50
60
70
80
90
100
110
120
130
140
150
160
TEMPERATURE (°C)
LIGHT OIL 1,3°E AT 20°C
HEAVY OIL 2,4°E AT 50°C
HEAVY OIL 4°E AT 50°C
HEAVY OIL 7,5°E AT 50°C
HEAVY OIL 10°E AT 50°C
HEAVY OIL 13°E AT 50°C
HEAVY OIL 22°E AT 50°C
HEAVY OIL 50°C
HEAVY OIL 47°E AT 50°C
HEAVY OIL 70°E AT 50°C
HEAVY OIL 200°E AT 50°C

Fig. 13

Indicative diagram showing the oil temperature at burner pump inlet vs. oil viscosity

Example: if the oil has a 50°E @ 50°C viscosity, the oil temperature at the pump inlet should be 80°C (see diagram).

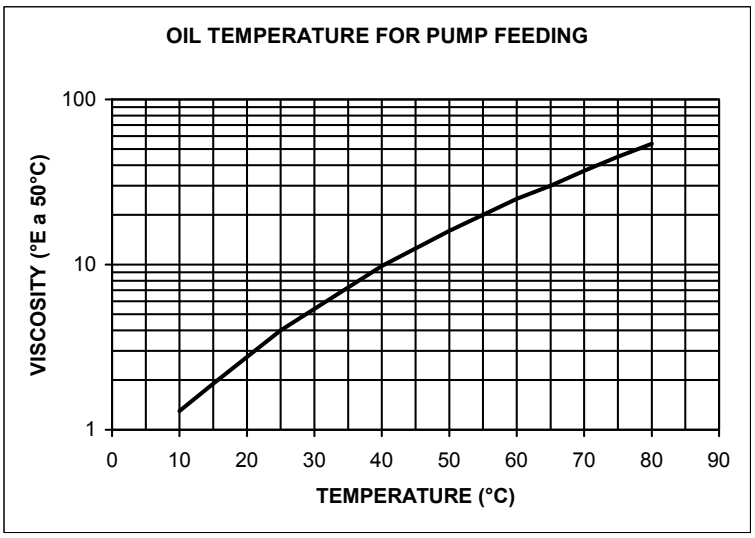

Fig. 14

Indicative diagram showing the oil pressure according to its temperature

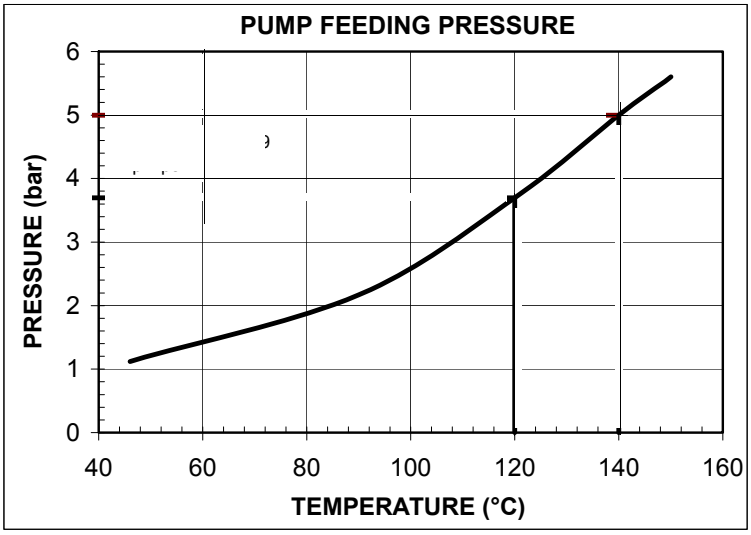

Fig. 15

Indicative diagram showing the oil atomising temperature according to its viscosity

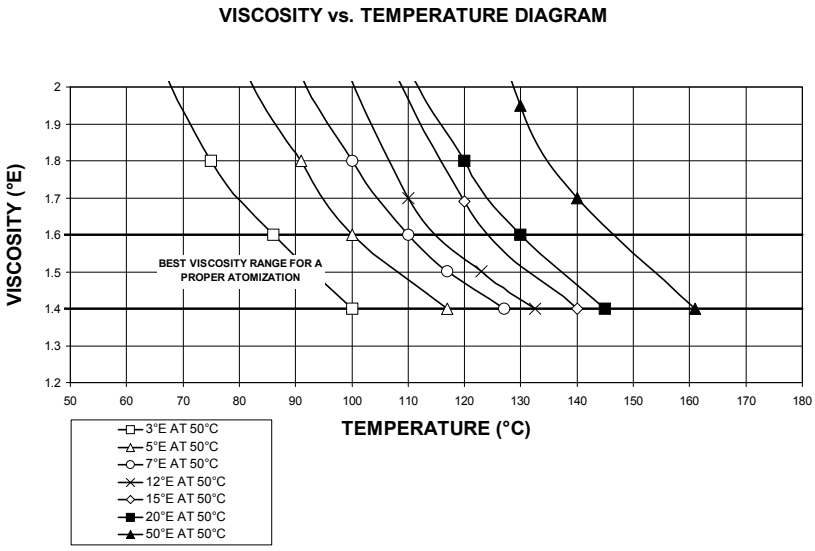

Fig. 16

Example: if the oil has a 50°E @ 50°C viscosity, the oil atomising temperature should be between 145°C and 160°C (see diagram).

Fig. 17 3ID00014 v2 **Hydraulic diagram - Two or more burners configuration**

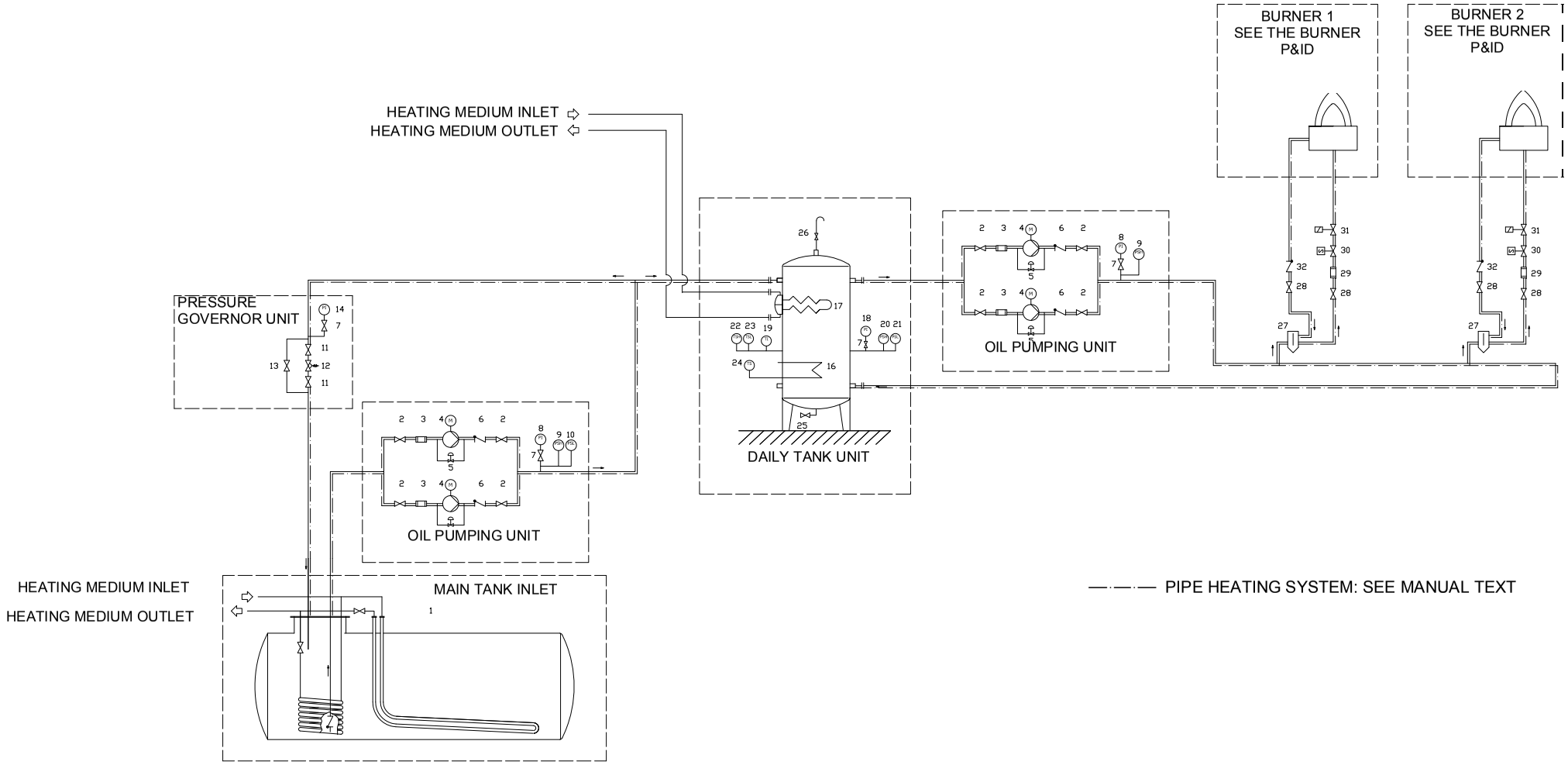

	OIL TRAIN		**PRESSURE GOVERNOR UNIT**				
1	Main tank	11	Manual valve	21	Low pressure switch	31	Safety valve
	OIL PUMPING UNIT	12	Pressure governor	22	Thermostat (high)	32	One-way valve
2	Manual valve	13	Needle valve	23	Thermostat (low)		
3	Filter	14	Pressure gauge	24	Thermostat		
4	Pump coupled to electrical motor		**DAILY TANK**	25	Manual valve		
5	Safety valve	15	Daily tank	26	Manual valve		
6	One-way valve	16	Electrical resistor		**TO THE BURNER**		
7	Manual valve	17	Heating device	27	Degassing bottle		
8	Pressure gauge	18	Pressure gauge	28	Manual valve		
9	Maximum pressure switch	19	Thermometer	29	Filter (supplied loose with the burner)		
10	Minimum pressure switch	20	High pressure switch	30	Solenoide valve		

Fig. 18 - 3ID0023 v2 - **Hydraulic diagram - Single burner configuration**

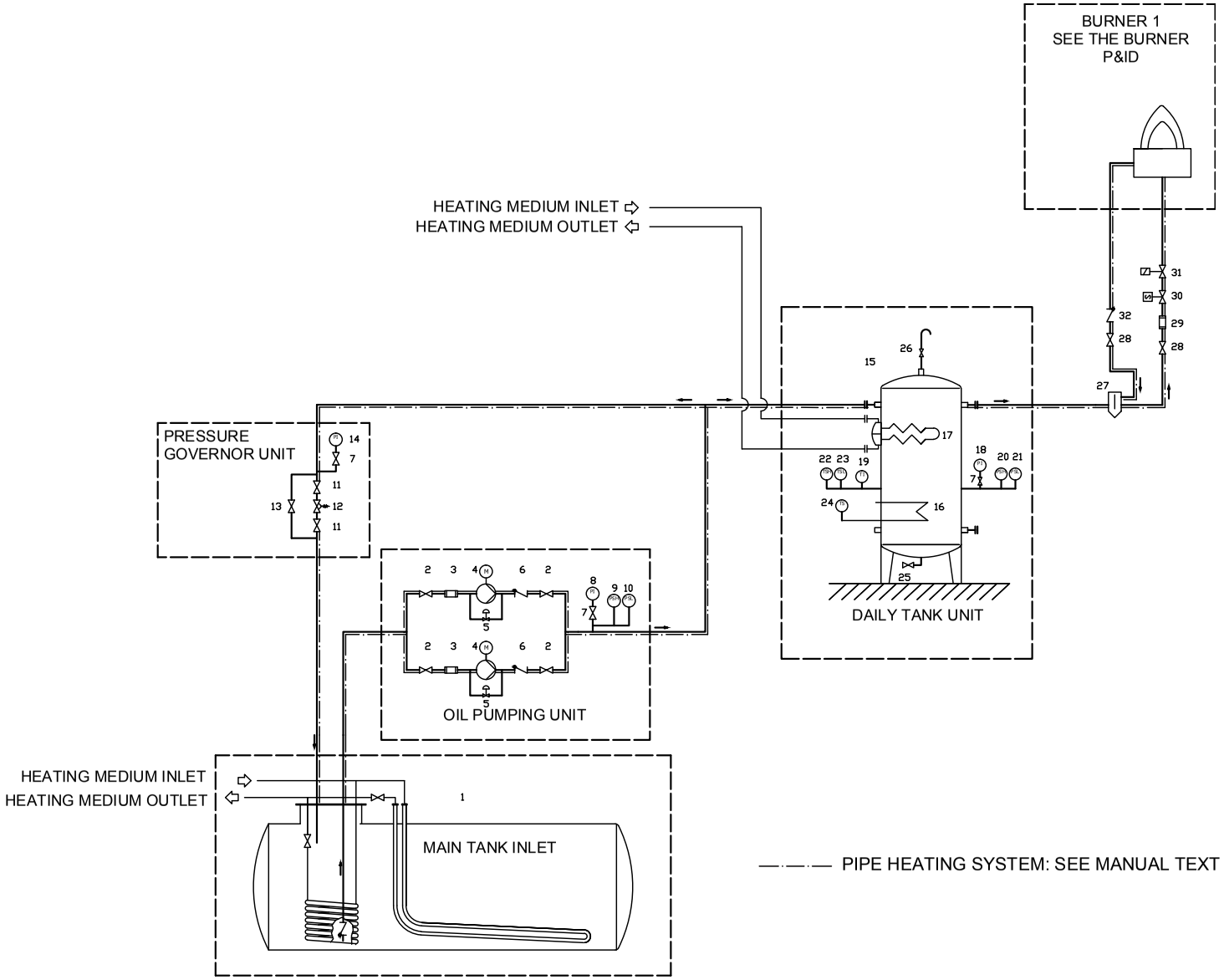

	OIL TRAIN
1	Main tank
	OIL PUMPING UNIT
2	Manual valve
3	Filter
4	Pump coupled to electrical motor
5	Safety valve
6	One-way valve
7	Manual valve
8	Pressure gauge
9	Maximum pressure switch
10	Minimum pressure switch
	PRESSURE GOVERNOR UNIT
11	Manual valve
12	Pressure governor
13	Needle valve
14	Pressure gauge
	DAILY TANK
15	Daily tank
16	Electrical resistor
17	Heating device
18	Pressure gauge
19	Thermometer
20	High pressure switch
21	Low pressure switch
22	Thermostat (high)
23	Thermostat (low)
24	Thermostat
25	Manual valve
26	Manual valve
	TO THE BURNER
27	Degassing bottle
28	Manual valve
29	Filter (supplied loose with the burner)
30	Solenoide valve
31	Safety valve
32	One-way valve

Electrical connections

	Respect the basic safety rules. make sure of the connection to the earthing system. do not reverse the phase and neutral connections. fit a differential thermal magnet switch adequate for connection to the mains.
	ATTENTION: before executing the electrical connections, pay attention to turn the plant's switch to OFF and be sure that the burner's main switch is in 0 position (OFF) too. Read carefully the chapter "WARNINGS", and the "Electrical connections" section.

To execute the electrical connections, proceed as follows:

1 remove the cover from the electrical board, unscrewing the fixing screws;
2 execute the electrical connections to the supply terminal board as shown in the attached wiring diagrams;
3 check the direction of the fan motor (see next paragraph);
4 refit the panel cover.

WARNING:It is recommended to install a shunt trip disconnect switch that acts on the preheater unit supply line and avoids the oil overheating / resistance damage in case of a malfunction of the resistance contactor. Inside the electric board a free contact is provided (terminals 507 - 508) for this purpose.

Note on elecrtical supply

If the power supply to the burner is 230V three-phase or 230V phase-phase (without a neutral), with the Siemens control box, between the terminal 2 (terminal X3-04-4 in case of LMV2x, LMV3x, LMV5x, LME7x) on the board and the earth terminal, an RC Siemens RC466890660 filter must be inserted.

Key
C - Capacitor (22nF/250V)
LME / LMV - Siemens control box
R - Resistor (1MΩ)
M - Terminal 2 (LGB,LMC,LME), terminal X3-04-4 (LMV2x, LMV3x, LMV5, LME7x)
RC466890660 - RC Siemens filter

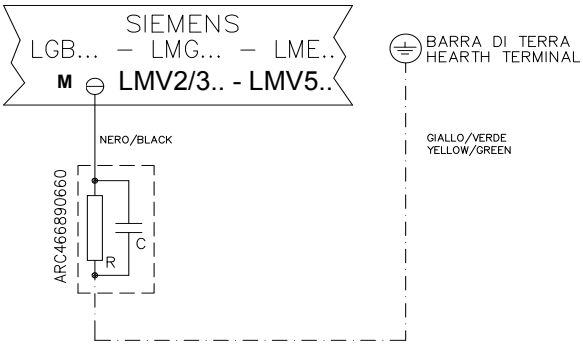

For LMV5 control box, please refer to the clabeling recommendations avaible on the Siemens CD attached to the burner

Rotation of electric motor

Once the electrical connection of the burner is executed, remember to check the rotation of the electric motor. The motor should rotate according to the "arrow" symbol on the body. In the event of wrong rotation, reverse the three-phase supply and check again the rotation of the motor.

CAUTION: check the motor thermal cut-out adjustment

NOTE: the burners are supplied for three-phase 380 V or 400 V supply, and in the case of three-phase 220 V or 230 V supply it is necessary to modify the electrical connections into the terminal box of the electric motor and replace the overload tripped relay.

Connecting the oil heating resistors

2.4 - 4.5 kW

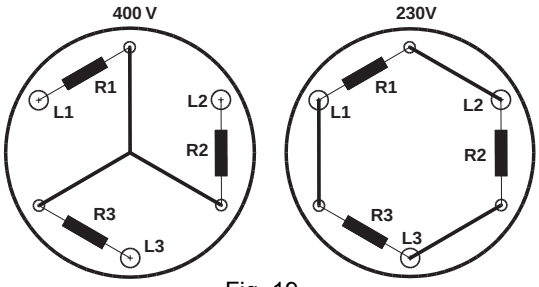

Fig. 19

8 - 12 kW

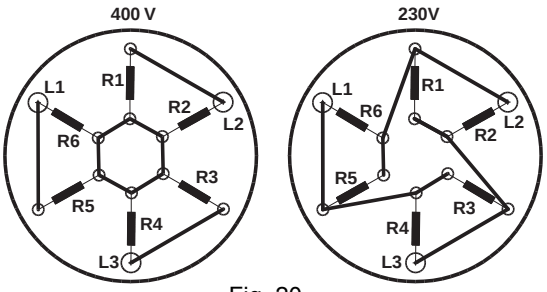

Fig. 20

18 - 24 kW

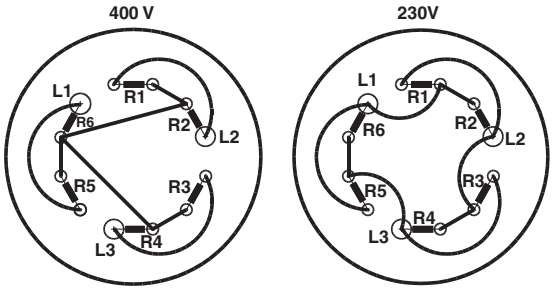

Fig. 21

ELECTRIC MOTOR CONNECTION

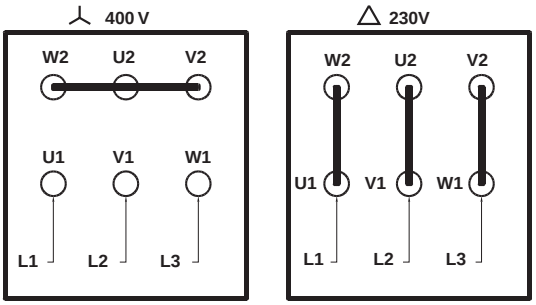

Fig. 22

AIR FLOW AND FUEL ADJUSTMENT

Adjustments - brief description

Adjust the air and gas flow rates at the maximum output (“high flame”) first, by means of the air damper and the adjusting cam respectively.

- Check that the combustion parameters are in the suggested limits.
- .Check the flow rate measuring it on the counter or, if it was not possible, verifying the combustion head pressure by means of a differential pressure gauge.
- Then, adjust the combustion values corresponding to the points between maximum and minimum: set the shape of the adjusting cam foil. The adjusting cam sets the air/gas ratio in those points, regulating the opening-closing of the throttle gas valve.
- Set, now, the low flame output, acting on the low flame microswitch of the actuator in order to avoid the low flame output increasing too much or that the flues temperature gets too low to cause condensation in the chimney.

The heavy oil flow rate can be adjusted choosing a nozzle that suits the boiler/utilisation output and setting properly the delivery pressure values.

WARNING! During commissioning operations, do not let the burner operate with insufficient air flow (danger of formation of carbon monoxide); if this should happen, make the fuel decrease slowly until the normal combustion values are achieved.

WARNING! the combustion air excess must be adjusted according to the values in the following chart.

Recommended combustion parameters		
Fuel	Recommended (%) CO_2	Recommended (%) O_2
Natural gas	9 ÷ 10	3 ÷ 4.8
Heavy oil	11 ÷ 12.5	4.7 ÷ 6.7
Heavy oil <=7°E a 50 °C	11 ÷ 12	4.2 ÷ 6.2

ADJUSTMENTS FOR GAS OPERATION

1 check the fan motor rotation.

2 Only for burners provided with **Multibloc MB-DLE gas valves:** before starting the burner up, set the slow opening. To set the slow opening, remove cover **T**, reverse it upside down and use it as a tool to rotate screw **VR**. Clockwise rotation reduces start flow rate, anticlockwise rotation increases it. Do not use a screwdriver on the screw **VR**!

Note: the screw **VSB** must be removed only in case of replacemente of the coil.

3 Before starting the burner up, drive the high flame actuator microswitch matching the low flame one (in order to let the burner operates at the lowest output) to safely achieve the high flame stage.

4 Start the burner up by means of the thermostat series and wait until the pre-purge time comes to an end and that the burner starts up;

5 drive the burner to high flame stage, by means fo the thermostat **TAB**.

6 Then move progressively the microswitch to higher values until it reaches the high flame position; always check the combustion values and eventually adjusting the gas by means of the valves group stabiliser.

7 go on adjusting air and gas flow rates: check, continuosly, the flue gas analisys, as to avoid combustion with little air; dose the air according to the gas flow rate change following the steps quoted below;

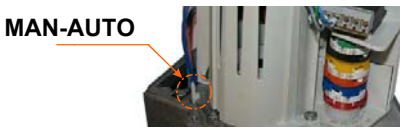

Siemens SQM40

Actuator cams (SQM40)

I	High flame
II	Stand-by
III	Low flame - gas
IV	Low flame - oil
V	Ignition - oil
VI	Ignition - gas

8 acting on the pressure stabiliser of the valves group, adjust the **gas flow rate in the high flame stage** as to meet the values requested by the boiler/utilisation:

-**Multibloc MB-DLE:**The pressure governor is adjusted by operating the screw **VS** located under the cover **C**. By screwing down the pressure is increased and by unscrewing it is reduced. The valve is adjusted by means of the **RP** regulator after slackening the locking screw **VB** by a number of turns. By unscrewing the regulator **RP** the valve opens, screwing the valve closes.

- Siemens VGD valves group: remove cap **T** and act on the **VR** adjusting screw to increase or decrease the pressure and consequently the gas rate; screwind **VR** the rate increases, unscrewing it decreases (see next figure).

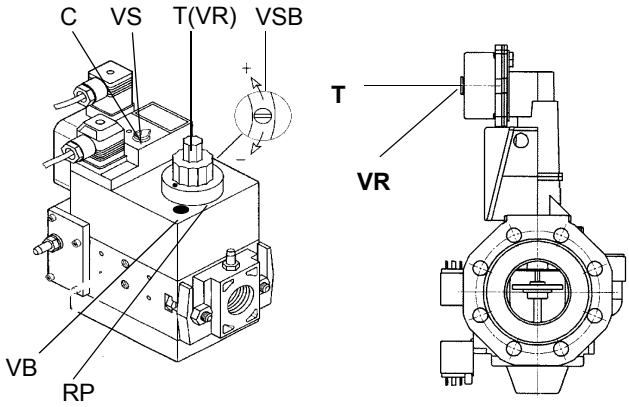

Dungs Multibloc MB-DLE **Siemens VGD..**

9 To adjust the **air flow rate in the high flame stage**, loose the **RA** nut and screw **VRA** as to get the desired air flow rate: moving the rod **TR** towards the air damper shaft, the air damper opens and consequently the air flow rate increases, moving it far from the shaft the air damper closes and the air flow rate decreases.

Note: once the procedure is perfomed, be sure that the blocking nut **RA** is fasten. Do not change the position of the air damper rods.

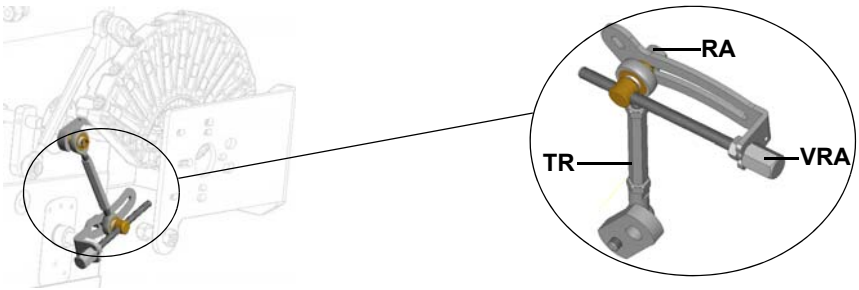

10 If necessary, adjust the combustion head position (see the dedicated paragraph)..

Attention! if it is necessary to change the head position, repeat the air and gas adjustments described above.

11 The air and gas rate are now adjusted at the maximum power stage, go on with the point to point adjustement on the **SV1** (gas side) adjusting cam as to reach the minimum output point.

12 as for the point-to-point regulation, move the gas low flame microswitch a little lower than the maximum position (90°);

13 set the **TAB** thermostat to the minimum in order that the actuator moves progressively towards the low flame position;

14 move the gas low flame microswitch to the minimum to move the actuator towards the low flame until the two bearings find the adjusting screw that refers to the lower position: screw **V1** to increase the rate, unscrew to decrease.

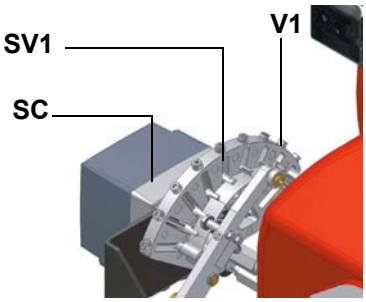

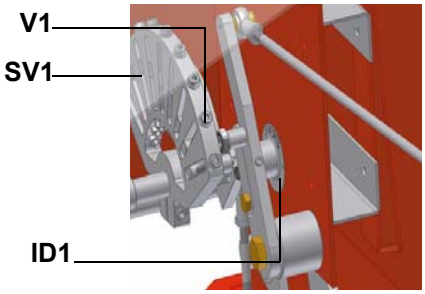

Gas throttle valve open

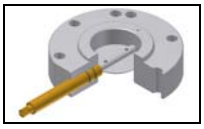

Gas throttle valve closed

15 Move again the gas low flame microswitch towards the minimum to meet the next screw on the adjusting cam and repeat the previous step; go on this way as to reach the desired low flame point.

16 Now adjust the pressure switches.

17

Multibloc MB-DLE

The multibloc unit is a compact unit consisting of two valves, gas pressure switch, pressure stabilizer and gas filter.

The valve is adjusted by means of the **RP** regulator after slackening the locking screw **VB** by a number of turns. By unscrewing the regulator **RP** the valve opens, screwing the valve closes. To set the fast opening remove cover **T**, reverse it upside down and use it as a tool to rotate screw **VR**. Clockwise rotation reduces start flow rate, anticlockwise rotation increases it.

Do not use a screwdriver on the screw **VR**!

The pressure stabilizer is adjusted by operating the screw **VS** located under the cover **C**. By screwing down the pressure is increased and by unscrewing it is reduced.

Note: the screw **VSB** must be removed only in case of replacemente of the coil.

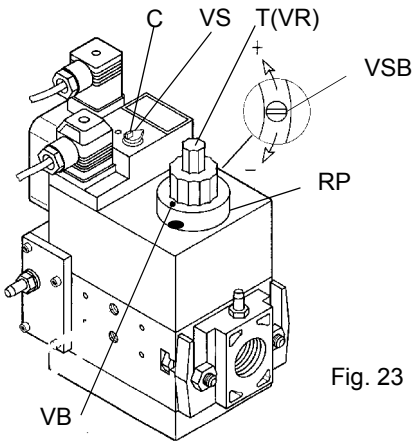

Fig. 23

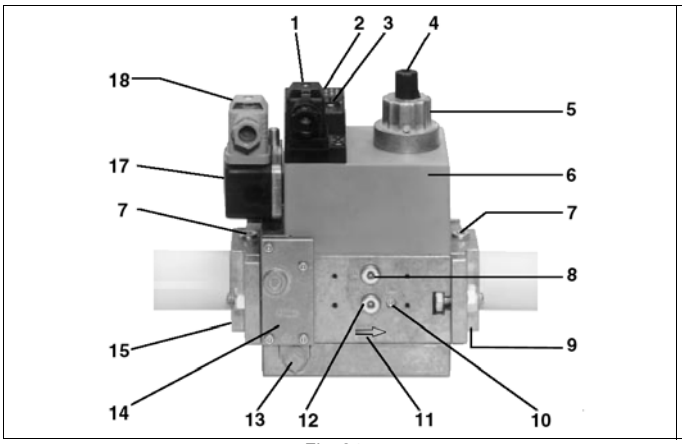

Fig. 24

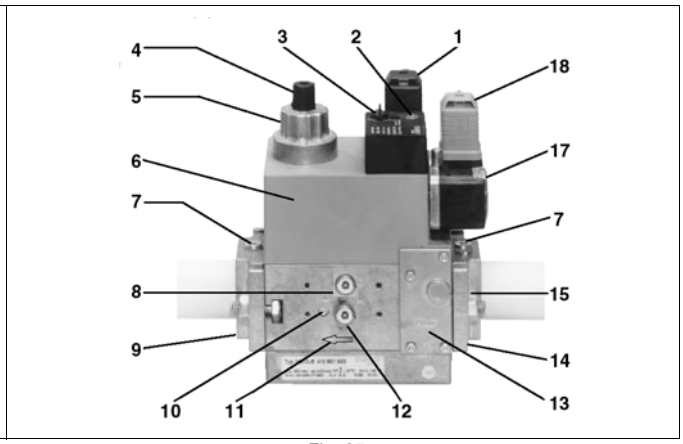

Fig. 25

Key

1 Electrical connection for valves
2 Operation display (optional)
3 Pressure governor closing tap
4 Start setting cap
5 Hydraulic brake and rate regulator
6 Coil
7 Test point connection G 1/8
8 Test point connection G 1/8 downstream of valve 1, on both sides
9 Output flange
10 Test point connection M4 downstream of valve 2
11 Gas flow direction
12 Test connection G 1/8 downstream of valve 1, on both sides
13 Vent nozzle pressure regulator
14 Filter (below cover)
15 Input flange
17 Pressure switch
18 Pressure switch electric connection

Gas valves Siemens VGD - Version with SKP2. (provided with pressure stabilizer).

To increase or decrease gas pressure, and therefore gas flow rate, remove the cap **T** and use a screwdriver to adjust the regulating screw **VR**. Turn clockwise to increase the flow rate, counterclockwise to reduce it.

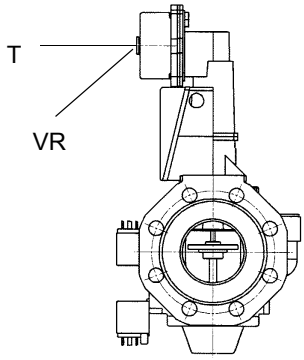

Setting air and gas pressure switches

The **air pressure switch** locks the control box if the air pressure is not the one requested. If it happens, unlock the burner by means of the control box unlock pushbutton, placed on the burner control panel.

The **gas pressure switches** check the pressure to avoid the burner operate when the pressure value is not in the requested pressure range.

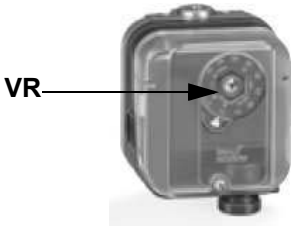

Calibration of low gas pressure switch

As for the gas pressure switch calibration, proceed as follows:

- Be sure that the filter is clean.
- Remove the transparent plastic cap.
- While the burner is operating at the maximum output, test the gas pressure on the pressure port of the minimum gas pressure switch.
- Slowly close the manual cutoff valve (placed upstream the pressure switch, see gas train installation diagram), until the detected pressure is reduced by 50%. Pay attention that the CO value in the flue gas does not increase: if the CO values are higher than the limits laid down by law, slowly open the cutoff valve as to get values lower than these limits.
- Check that the burner is operating correctly.
- Clockwise turn the pressure switch adjusting ring nut (as to increase the pressure value) until the burner stops.
- Slowly fully open the manual cutoff valve.
- Refit the transparent plastic cover on the pressure switch.

Adjusting the maximum gas pressure switch (when provided)

To calibrate the maximum pressure switch, proceed as follows according to its mounting position:

1 remove the pressure switch plastic cover;

2 if the maximum pressure switch is mounted upstreaam the gas valves: measure the gas pressure in the network, when flame is off; by means of the adjusting ring nut **VR**, set the value read, increased by the 30%.

3 if the maximum pressure switch is mounted downstream the “gas governor-gas valves” group and upstream the butterfly valve: light the burner, adjust it according to the procedure in the previous paragrph. Then, measure the gas pressure at the operating flow rate, downstream the “gas governor-gas valves” group and upstream the butterfly valve; by means of the adjusting ring nut **VR**, set the value read on step 2, increased by the 30%;

4 replace the plastic cover.

Calibration of air pressure switch

To calibrate the air pressure switch, proceed as follows:

- Remove the transparent plastic cap.
- Once air and fuel setting have been accomplished, startup the burner.
- During the pre-purge phase o the operation, turn slowly the adjusting ring nut **VR** in the clockwise direction (to increase the adjusting pressure) until the burner lockout, then read the value on the pressure switch scale and set it to a value reduced by 15%.
- Repeat the ignition cycle of the burner and check it runs properly.
- Refit the transparent plastic cover on the pressure switch.

PGCP Gas leakage pressure switch (witn Siemens LDU/LME7x burner control/Siemens LMV Burner Management System)

- remove the pressure switch plastic cover;
- adjust the PGCP pressure switch to the same value set for the minimum gas pressure switch;
- replace the plastic cover.

Adjusting the combustion head

KP60 - KP72

Only if necessary, change the combusiton head position. The burner is factory-set with the head in its MAX position (maximum output). To let the burner operate at a lower output, turn clockwise the **VRT** screw and move progressively the combustion head back towards the MIN position.**Attention!** if it is necessary to change the head position, repeat the air and gas adjustments described above.

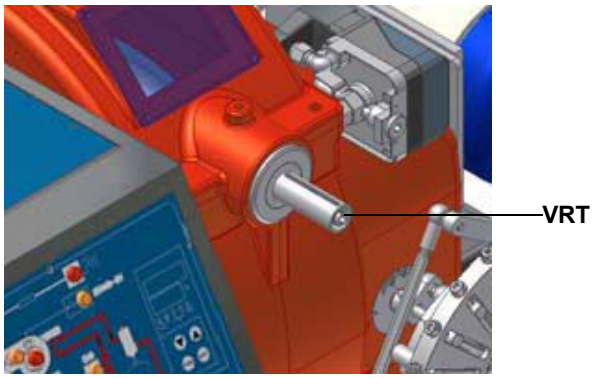

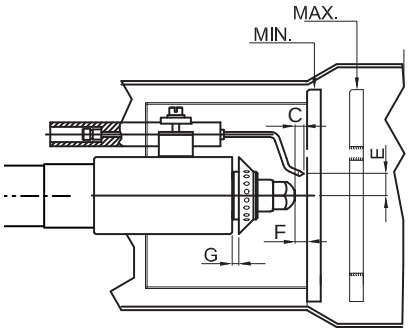

Fig. 26

KP73

Only if necessary, change the combusiton head position: to let the burner operate at a lower output, loose the **VB** screw and move progressively back the combustion head towards the MIN position, by turning clockwise the **VRT** ring nut. Fasten **VB** screw when the adjustment is accomplished.

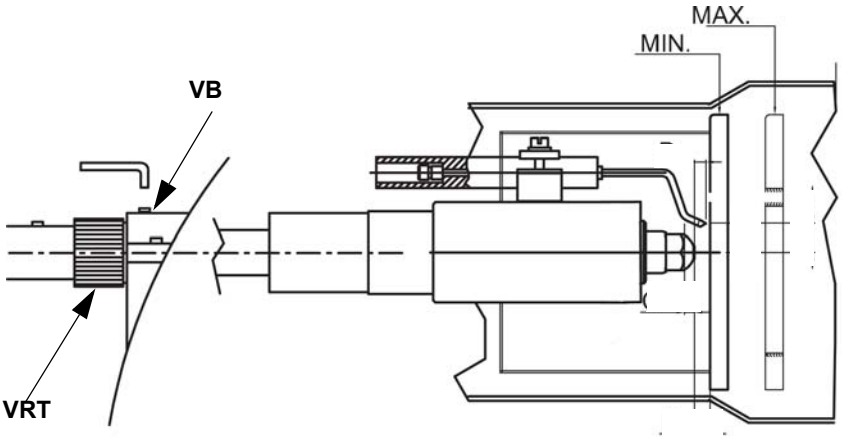

Attention! if it is necessary to change the head position, repeat the air and fuel adjustments described above.

ADJUSTMENTS FOR OIL OPERATION

Before starting up the burner, make sure that the return pipe to the tank is not obstructed. Any obstruction would cause the pump seal to break.

ATTENTION: **before starting the burner up, be sure that the manual cutoff valves are open. Be sure that the mains switch is closed.**

Oil thermostat adjustment

Progressive and fully modulanting oil burners are equipped with electronic multi-thermostat Danfoss MCX, whose operation is controlled by thyristor. (for details refer to the attached technical documentation)

Fig. 27 - Danfoss MCX

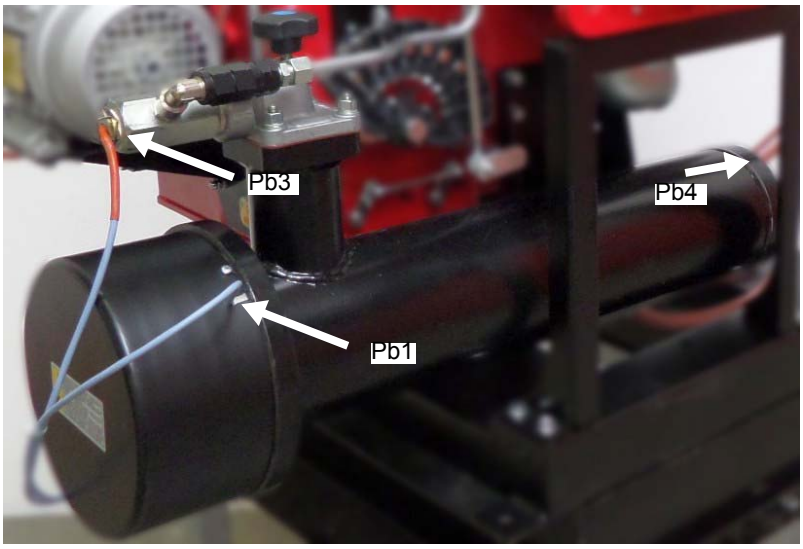

Fig. 28 - Probe connections (Danfoss MCX)

Menu path				Oil viscosity at 50 °C according to the letter shown in the burner model				
				P	**N**	**E**	**D**	**H**
				89 cSt	< 50 cSt	> 50 cSt < 110 cSt	> 110 cSt < 400 cSt	> 400 cSt < 4000 cSt
				12 °E	< 7°E	> 7 °E < 15 °E	> 15 °E < 50 °E	> 50 °E < 530 °E
Par								
rEG	Pb1	tr	Oil heater temperature probe	parameter not visible				
	Pb2	tCI	Plant consent temperature probe (when installed)	20 °C	70 °C	70 °C	70 °C	---
	Pb3	Oil	oil heater output temperature probe (PID regulation);	60-70 °C	110-120 °C	120-130 °C	130-140 °C	140-150 °C
		SP0	Set-point oil heater with oil pump stopped (stand-by)	45 °C	120 °C	130 °C	140 °C	150 °C
	Pb4	tcn	Oil heater consent temperature probe	40 °C	100 °C	100 °C	110 °C	120 °C
		trS	Safety temperature tank resistors (manual reset)	120 °C	190-200 °C	190-200 °C	190-200 °C	190-200 °C

The oil viscosity at the nozzle, should be about 1,5 °E, which guarantees correct and safe functioning of the burner. The above temperature values are suggested and refer to a plant designed according to the prescriptions in the burner user manual.The suggested values can change in reference to the fuel oil specifications.

Adjustment in the heavy oil operation

The heavy oil flow rate can be adjusted choosing a by-pass nozzle that suits the boiler/utilisation output and setting the delivery and return pressure values according to the ones quoted on the chart below and the diagram on Fig. 30-Fig. 31.

FLUIDICS NOZZLE: REFERENCE DIAGRAM (INDICATIVE ONLY)

DIMENSIONS	FLOW RATE kg/h		Indicative pessure on return (bar)
	Min	Max	
40	13	40	19
50	16	50	22
60	20	60	20
70	23	70	23
80	26	80	23
90	30	90	22
100	33	100	22
115	38	115	21
130	43	130	22
145	48	145	21
160	53	160	21
180	59	180	22
200	66	200	21
225	74	225	22
250	82	250	22
275	91	275	22
300	99	300	23
330	109	330	23
360	119	360	22
400	132	400	22
450	148	450	22
500	165	500	22
550	181	550	22
600	198	600	23
650	214	650	23
700	231	700	23
750	250	750	23
800	267	800	22

Tab. 3

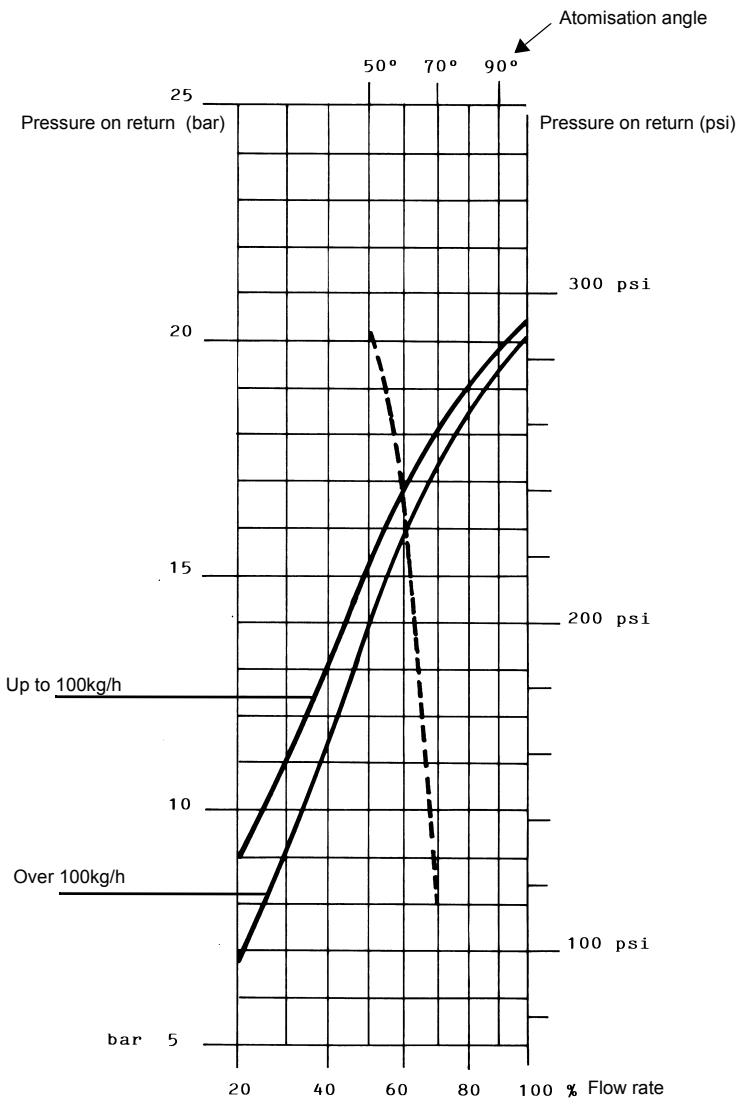

NOZZLE SUPPLY PRESSURE = 25 bar

- - - - - Atomisation angle according to the return pressure

——— % Flow rate

viscosity at nozzle = 5 cSt

ATTENTION! To achieve the maximum flow rate close completely the return line.

ADJUSTMENTS FOR OIL OPERATION

1 Once the air and gas flow rates are adjusted, turn the burner off, switch to the oil operation (OIL, on the burner control panel).

2 with the electrical panel open, prime the oil pump acting directly on the related **CP** contactor (see next picture): check the pump motor rotation and keep pressing for some seconds until the oil circuit is charged;

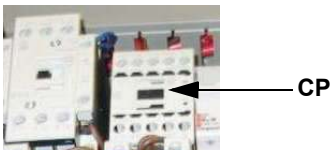

3 bleed the air from the **M** pressure gauge port by loosing the cap without removing it, then release the contactor.

Suntec E..	Suntec TA.
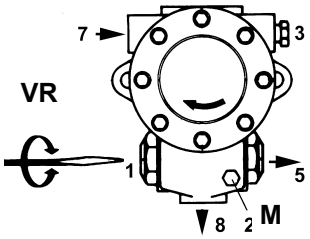	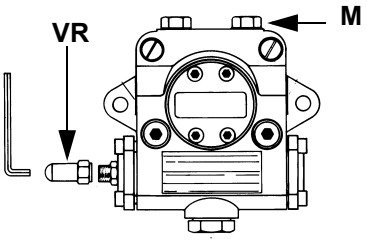

4 Before starting the burner up, drive the high flame actuator microswitch matching the low flame one (in order to let the burner operates at the lowest output) to safely achieve the high flame stage .

5 Start the burner up by means of the thermostat series and wait until the pre-purge time comes to an end and that the bruner starts up;

6 drive the burner to high flame stage, by means fo the thermostat **TAB** (as far as fully-modulating burners, see the related paragraph).

7 Then move progressively the microswitch to higher values until it reaches the high flame position; always check the combustion values and eventually adjusting the oil pressure (see next step).

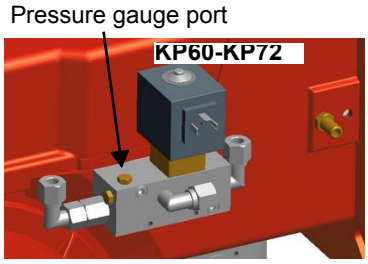

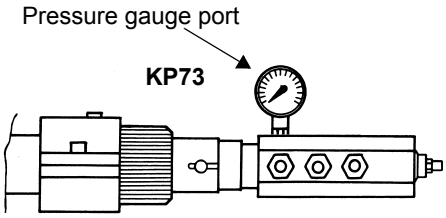

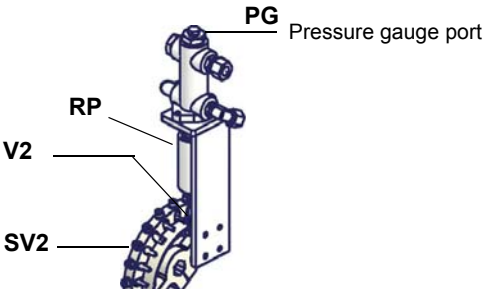

8 Only if necessary, adjust the supply pressure as follows;insert a pressure gauge into the port shown on figure and act on on the pump adjusting screw **VR**. Pressure values are indicated at the beginning of this paragraph.

9 in order to get the maximum oil flow rate, adjust the pressure (reading its value on the **PG** pressure gauge) without changing the air flow rate set during the gas operation adjustments (see previous paragraph): checking always the combustion parameters, the adjustment is to be performed by means of the **SV2** adjusting cam screw (see picture) when the cam has reached the high flame position.

10 once the oil rate is adjusted at the maximum output (the air rate was adjusted in the gas regulation), go on with the point to point adjustment on the **SV2** (light oil side) adjusting cam as to reach the minimum output point, as described on the next steps.

11 as for the point-to-point regulation, move the gas low flame microswitch a little lower than the maximum position (90°);

12 set the **TAB** thermostat to the minimum in order that the actuator moves progressively towards the low flame position (as far as fully-modulating burners, see the related paragraph);

13 move the low flame cam to the minimum to move the actuator towards the low flame until the two bearings find the adjusting screw that refers to the lower position: screw **V2** to increase the rate, unscrew to decrease.

14 Move again cam III towards the minimum to meet the next screw on the adjusting cam and repeat the previous step; go on this way as to reach the desired low flame point.

15 The low flame position must never match the ignition position that is why the cam must be set 20°- 30° more than the ignition position.

Turn the burner off; then start it up again. If the adjustment is not correct, repeat the previous steps.

PART II: OPERATION

LIMITATIONS OF USE

THE BURNER IS AN APPLIANCE DESIGNED AND CONSTRUCTED TO OPERATE ONLY AFTER BEING CORRECTLY CONNECTED TO A HEAT GENERATOR (E.G. BOILER, HOT AIR GENERATOR, FURNACE, ETC.), ANY OTHER USE IS TO BE CONSIDERED IMPROPER AND THEREFORE DANGEROUS.

THE USER MUST GUARANTEE THE CORRECT FITTING OF THE APPLIANCE, ENTRUSTING THE INSTALLATION OF IT TO QUALIFIED PERSONNEL AND HAVING THE FIRST COMMISSIONING OF IT CARRIED OUT BY A SERVICE CENTRE AUTHORISED BY THE COMPANY MANUFACTURING THE BURNER.

A FUNDAMENTAL FACTOR IN THIS RESPECT IS THE ELECTRICAL CONNECTION TO THE GENERATOR'S CONTROL AND SAFETY UNITS (CONTROL THERMOSTAT, SAFETY, ETC.) WHICH GUARANTEES CORRECT AND SAFE FUNCTIONING OF THE BURNER.

THEREFORE, ANY OPERATION OF THE APPLIANCE MUST BE PREVENTED WHICH DEPARTS FROM THE INSTALLATION OPERATIONS OR WHICH HAPPENS AFTER TOTAL OR PARTIAL TAMPERING WITH THESE (E.G. DISCONNECTION, EVEN PARTIAL, OF THE ELECTRICAL LEADS, OPENING THE GENERATOR DOOR, DISMANTLING OF PART OF THE BURNER).

NEVER OPEN OR DISMANTLE ANY COMPONENT OF THE MACHINE.

OPERATE ONLY THE MAIN SWITCH, WHICH THROUGH ITS EASY ACCESSIBILITY AND RAPIDITY OF OPERATION ALSO FUNCTIONS AS AN EMERGENCY SWITCH, AND ON THE RESET BUTTON.

IN THE EVENT OF REPEATED LOCKOUTS, DO NOT PERSIST WITH THE RESET BUTTON AND CONTACT QUALIFIED PERSONNEL WHO WILL PROCEED TO ELIMINATE THE MALFUNCTION.

WARNING: DURING NORMAL OPERATION THE PARTS OF THE BURNER NEAREST TO THE GENERATOR (COUPLING FLANGE) CAN BECOME VERY HOT, AVOID TOUCHING THEM SO AS NOT TO GET BURNT.

OPERATION

⚠	***ATTENTION:*** **before starting the burner up, be sure that the manual cutoff valves are open and check that the pressure upstream the gas train complies the value quoted on paragraph "Technical specifications".**

- Select the fuel by turning the switch CM on the burner control panel .

N.B. if the heavy oil is used, be sure the cutoff valves on the delivery and return pipes are OPEN.

- Check that the burner is not locked (LED **E** lights up); if so, reset it by pressing the reset button **N**.
- Check that the series of thermostats (or pressure switches) enable the burner to start up.

Gas Operation

- Check that the gas pressure in the circuit is high enough (LED **I** on).
- The valve proving test begins.
- At the beginning of the start-up cycle the the air damper moves to the maximum opening, the fan motor starts and the pre-purge phase begins. During the pre-purge phase the complete opening of the air damper is signalled by the LED **F** on the front panel.
- At the end of the pre-purge stage, the air damper moves to the ignition position, the ignition transformer is energised (signalled by LED **C** on the panel) and, after few sec.onds the two gas valves EV1 and EV2 are energised (indicator lights **H** and **G** on). Few seconds after the opening of the gas valves, the ignition transformer is de-energised and LED **C** is off.
- To move from the low flame position, the actuator opening time (<10 s) is controlled by the control box. When this time elapses, the burner operates according the plant needs.

Heavy oil Operation

- At the beginning of the start-up cycle the air damper moves to the maximum opening, the fan motor starts and the pre-purge phase begins. During the pre-purge phase the complete opening of the air damper is signalled by LED **F** on the front panel.
- At the end of the pre-purge the air damper is brought to the ignition position and the ignition transformer is energised (signalled by LED **C** on the panel). Few seconds later, the oil valve opens and the ignition transformer is de-energized (LED **C** off).
- The burner is now operating and after some seconds the burner is automatically driven into high flame (LED **A** on), or remains in low flame (LED **B** on) according to the plant needs.

Burner front panel

KP60-72

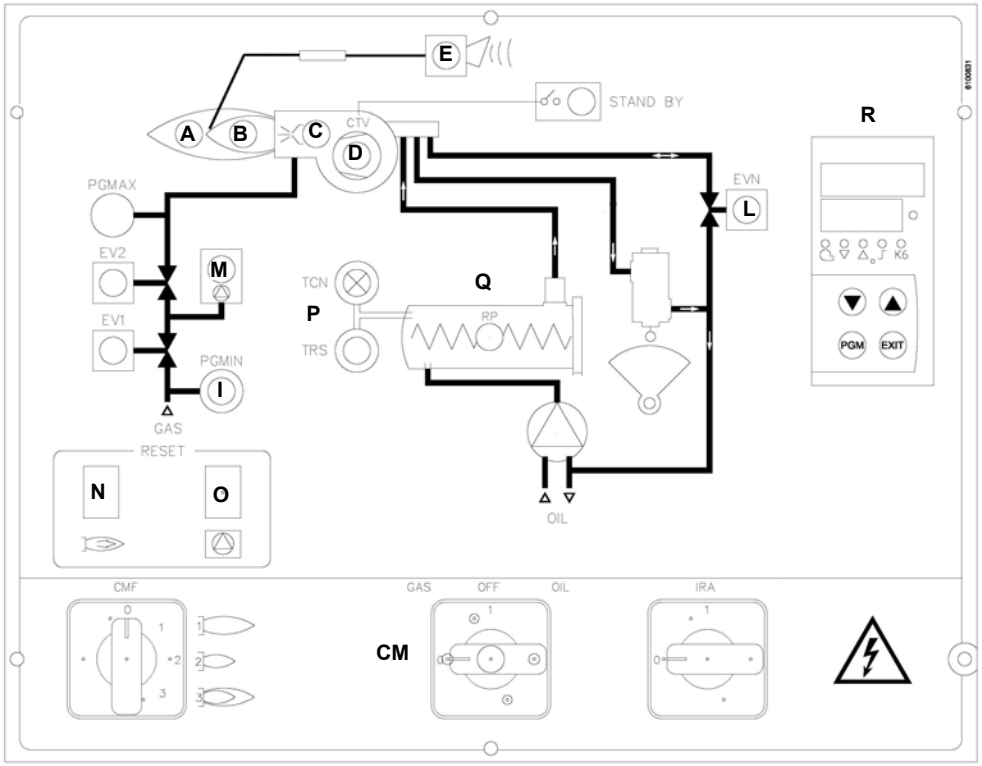

Key

A	High flame mode indicating light
B	Low flame mode indicating light
C	Ignition transformer operation
CM	Main switch/operation mode (Gas / Oil)
D	Fan motor overload tripped intervention
E	Burner lockout iindicationg light
F	Stand-by mode indicating light
G	Gas valve EV2 operation
H	Gas valve EV1 operation
I	Gas pressure switch consent
IRA	Pre-heater resistor switch
L	Oil solenoid valve operation
M	Gas proving system intervention
N	Flame monitor device reset pushbutton
O	Gas proving system device reset pushbutton
P	Pre-heating resistors safety thermostat
Q	Pre-heating oil tank
R	Modulator

KP73

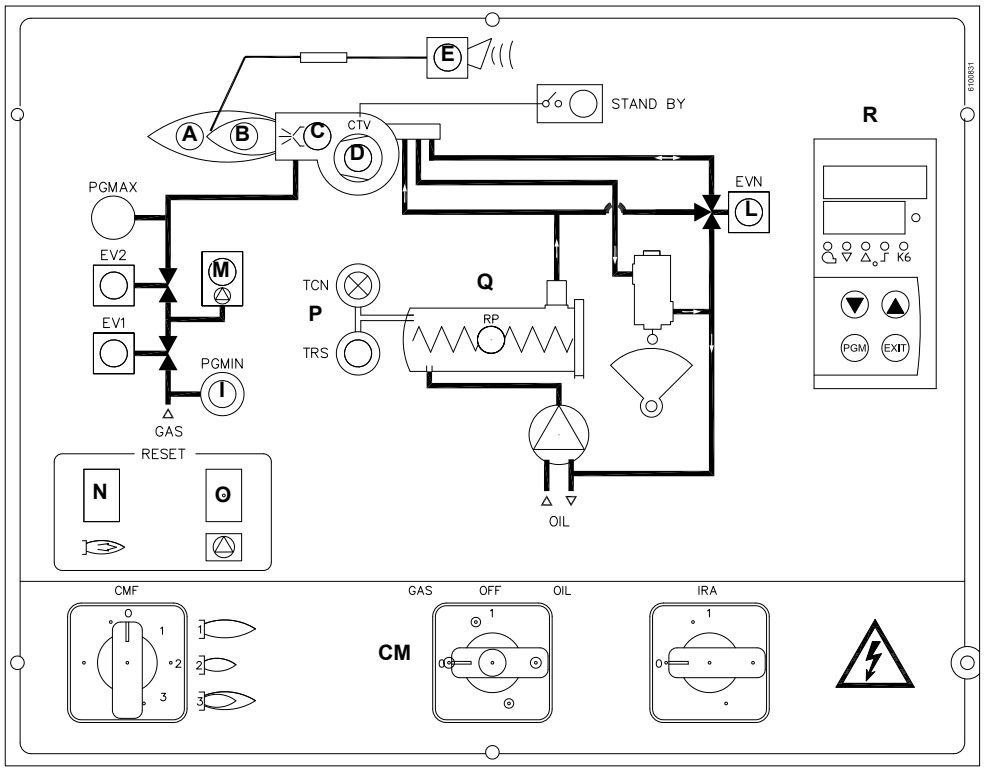

PART III: MAINTENANCE

At least once a year carry out the maintenance operations listed below. In the case of seasonal servicing, it is recommended to carry out the maintenance at the end of each heating season; in the case of continuous operation the maintenance is carried out every 6 months.

WARNING: ALL OPERATIONS ON THE BURNER MUST BE CARRIED OUT WITH THE MAINS DISCONNECTED AND THE FUEL MANAUL CUTOFF VALVES CLOSED!

ATTENTION: READ CAREFULLY THE "WARNINGS" CHAPTER AT THE BEGINNIG OF THIS MANUAL.

ROUTINE MAINTENANCE

- Clean and examine the gas filter cartridge and replace it if necesssary (see next paragraph).
- Check and clean the oil filter cartridge; replace it if necessary (see next paragraphs).
- Examine the condition of the oil flexible hoses and check for possible leaks.
- Check and clean if necessary the oil heaters and the tank, according to the fuel type and its use; remove the heaters flange fixing nuts and remove the heaters from the tank: clean by using steam or solvents and not metallic things.
- Clean and examine the filter inside the oil pump. Filter must be thoroughly cleaned at least once in a season to ensure correct working of the fuel unit. To remove the filter, unscrew the four screws on the cover. When reassemble, make sure that the filter is mounted with the feet toward the pump body. If the gasket between cover and pump housing should be damaged, it must be replaced. An external filter should always be installed in the suction line upstream of the fuel unit.
- Remove and clean the combustion head (page 50).
- Examine and clean the ignition electrodes, adjust and replace if necessary (see page 50).
- Examine and clean the detection probe, adjust and replace if necessary (see page 50).
- Examine the detection current (see page 52).
- Remove and clean (page 47) the heavy oil nozzle ***(Important: use solvents for cleaning, not metal utensils)*** and at the end of the maintenance procedures, after replacing the burner, turn it on and check the shape of the flame; if in doubt replace the nozzle. Where the burner is used intensively it is recommended to replace the nozzle as a preventive measure, at the begin of the operating season.
- Clean and grease joints and rotating parts.

IMPORTANT:Remove the combustion head before checking the ignition electrodes.

	CAUTION: avoid the contact of steam, solvent and other liquids with the electric terminals of the resistor. **On flanged heaters, replace the seal gasket before refitting it.** **Periodic inspections must be carried out to determine the frequency of cleaning.**

Gas filter maintenance

	ATTENTION: Before opening the filter, close the manual cutoff valve downstream the filter and bleed the gas; check that inside the filter there is no pressurised gas.

To clean or remove the filter, proceed as follows:

1 remove the cap unscrewing the fixing screws (A);
2 remove the filtering cartridge (B), clean it using water and soap, blow it with compressed air(or replace it, if necessary)
3 replace the cartridge in its proper position taking care to place it inbetween the guides as not to hamper the cap replacement;
4 be sure to replace the Or ring into its place (C) and replace the cover fastening by the proper screws (A).

A

B

C

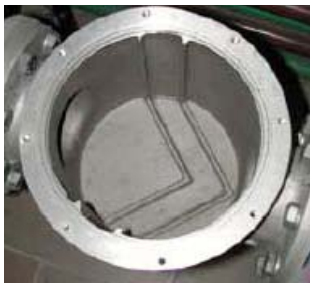

Self-cleaning filter

Fitted only on high viscosity oil burners. Periodically turn the knob to clean the filter.

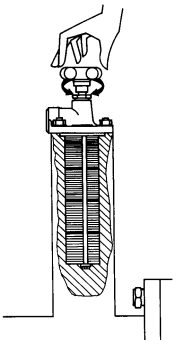

Replacing the spring in the gas valve group

To replace the spring in the gas valve group,proceed as follows:

1 Carefully twist the protection cap 1 and the O-ring 2.
2 remove the “set value” spring 3 from housing 4.
3 Replace spring 3.
4 Carefully insert the new “set value” spring. Pay attention to mount properly. First insert the spring part with smaller diameter in the housing.
5 Place O-ring 2 in protective cap 1. Screw in the protective cap with the O-ring in it.
6 Stick the adhesive label for spring identification on the type plate.

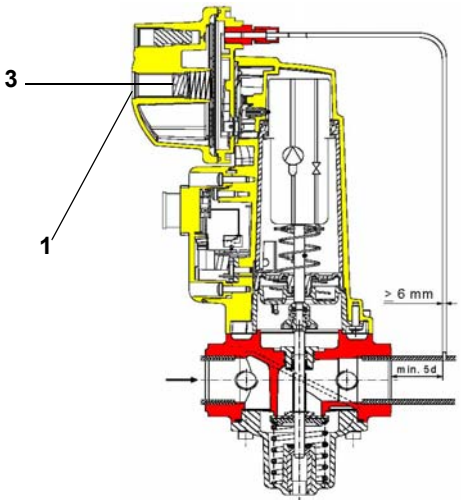

SKP Siemens actuator

Removing the oil gun, replacing the nozzle and the electrodes

ATTENTION: avoid the electrodes to get in touch with metallic parts (blast tube, head, etc.), otherwise the boiler operation would be compromised. Check the electrodes position after any intervention on the combustion head.

To remove the oil gun, proceed as follows:

1 remove the combustion head as described on the prevoius paragraph;
2 remove the oil gun and the electrodes: check the oil gun, replace it if necessary;
3 after removing the oil gun, unscrew the nozzle and replace it if necessary;
4 in order to replace the electrodes, unscrew the fixing screws and remove them: place the new electrodes being careful to observe the measures shown on next paragraph; reassemlbe following the reversed procedure.

Caution: adjust the nozzle position according to the procedure on the next paragraph.

(KP60, KP72) Electrodes Adjustment

Important Note: Check the ignition and detection electrodes after removing/adjusting the combustion head.

ATTENTION: avoid the ignition and detection electrodes to contact metallic parts (blast tube, head, etc.), otherwise the boiler's operation would be compromised. Check the electrodes position after any intervention on the combustion head.

Adjust the electrodes position, according to the quotes shown othe next picture

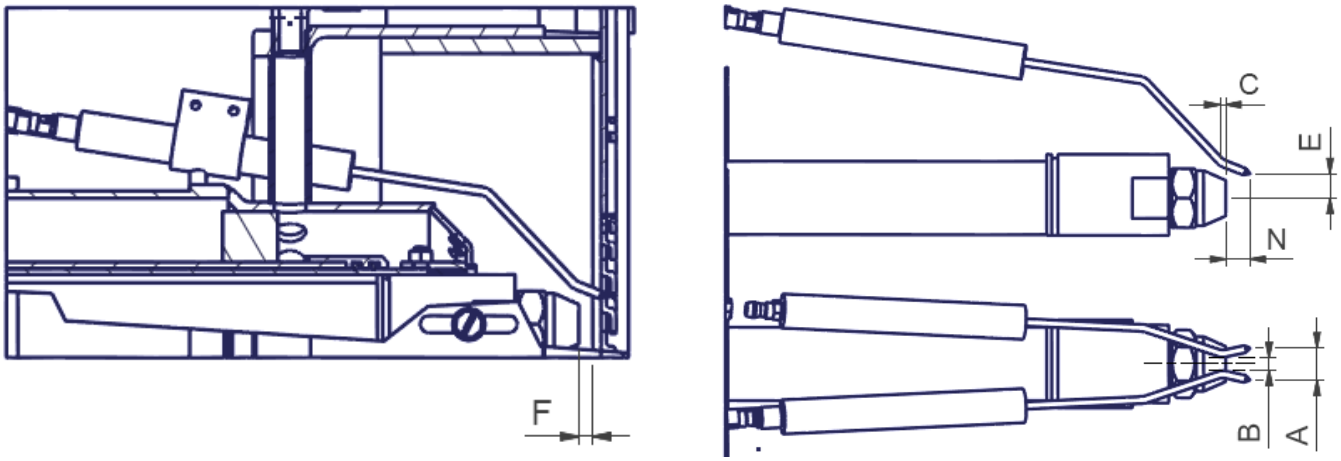

Fig. 29

A	B	C	E	F	N
10÷15	3÷5	3÷4	10÷13	8	10÷13

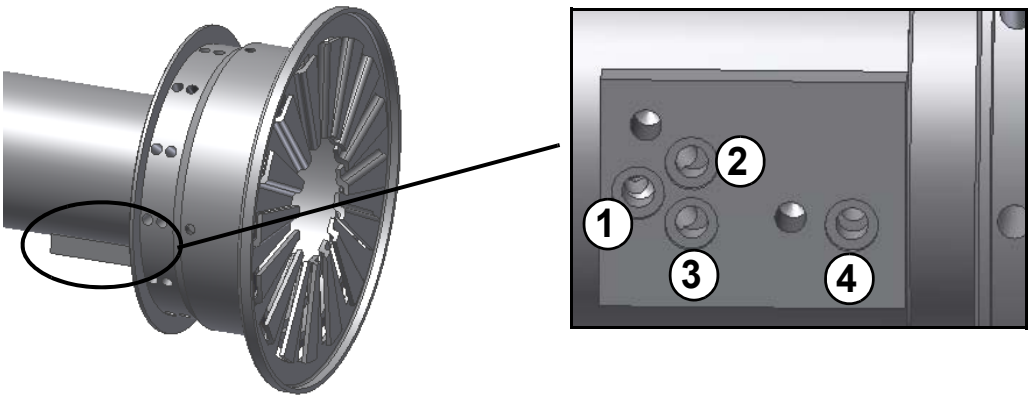

1 - spillback nozzle opening / closing
2- oil inlet
3 - oil return
4 - oil return

Removing the combustion head (KP73)

1 Remove the cover **H**.
2 Slide the photoresistance out of its housing.
3 Unscrew the **V** screws that block the gas collector **G**, loosen the three jionts **E** and remove the ass.y as shown on the following picture.
4 Clean the combustion head by means fo a vacuum cleaner; scrape off the scale by means fo a metallic brush.

Note: to remount the burner, floow the same procedure in the reversed order.

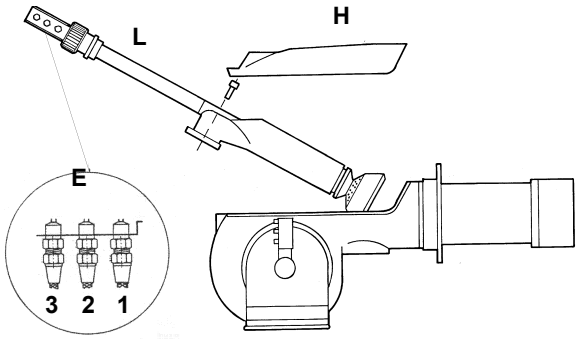

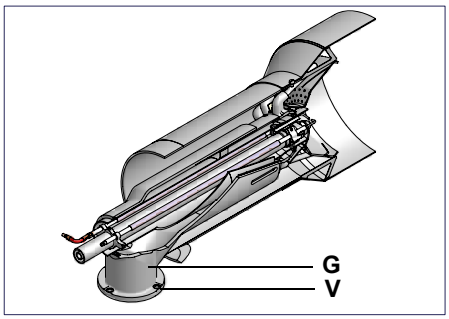

Key

1 Inlet
2 Return
3 Gun opening
E Oil piping connections
G Gas manifold
H Cover
L Oil gun
V Screws

Removing the oil gun, replacing the nozzle and the electrodes (KP73)

⚠	**ATTENTION:** avoid the electrodes to get in touch with metallic parts (blast tube, head, etc.), otherwise the boiler operation would be compromised. Check the electrodes position after any intervention on the combustion head.

To remove the oil gun, proceed as follows:

1 remove the combustion head as described on the prevoius paragraph;
2 loosen the **VL** screw and remove the oil gun and the electrodes: check the oil gun, replace it if necessary;
3 after removing the oil gun, unscrew the nozzle and replace it if necessary;
4 in order to replace the electrodes, unscrew the **VE** fixing screws and remove them: place the new electrodes being careful to observe the measures shown on : reassemlbe following the reversed procedure.

Caution: adjust the nozzle position according to the air pipe, by means of the **VU** screw, ance the **VL** screw is fastened.

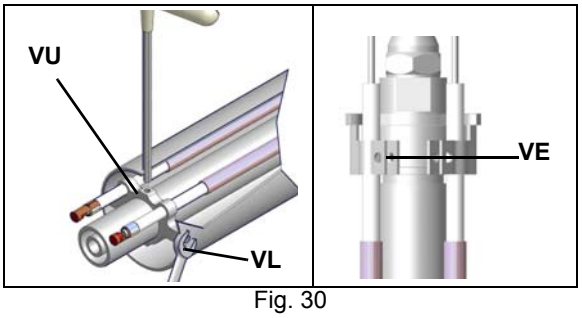

Fig. 30

Adjusting the electrodes position (KP73)

Adjust the electrodes position, according to the quotes shown in the next picture.

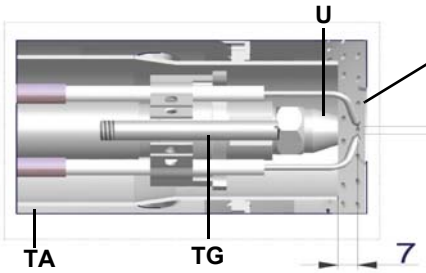

Keys

E	electrodes
TA	air pipe
TG	ignition gas pipe
U	nozzle

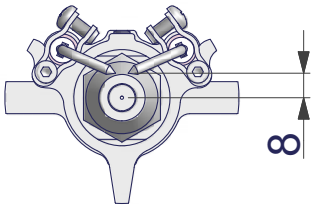

Fig. 31

Checking the detection current

To check the detection signal follow the scheme in the picture below. If the signal is less than the value indicated, check the position of the detection electrode or detector, the electrical contacts and, if necessary, replace the electrode or the detector.

Control box	Minimum detection signal
Siemens LFL1.3..	70µA with UV detector)

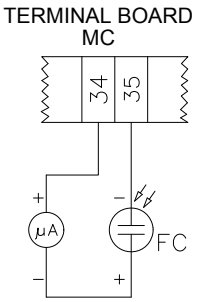

Fig. 32: Detection by photocell QRA..

Cleaning and replacing the detection photocell

The photocell working life is about 10000 working hours (about 1 year), at max 50°C after which it must be replaced.

To clean/replace the detection photocell, proceed as follows:

1 Disconnect the system from the electrical power supply.
2 Shut off the fuel supply
3 remove the photocell from its slot (see next figure);
4 clean the bulbe if dirty, taking care not to touch it with bare hands;
5 if necessary, replace the bulb;
6 replace the photocell into its slot.

Seasonal stop

To stop the burner in the seasonal stop, proceed as follows:

1 turn the burner main switch to 0 (Off position)
2 disconnect the power mains
3 close the fuel valve of the supply line

Burner disposal

In case of disposal, follow the instructions according to the laws in force in your country about the “Disposal of materials”.

TROUBLESHOOTING

Heavy oil operation

	THE BURNER DOESN'T START	THE BURNER REPEATS PRE-PURGE	NOISY FUEL PUMP	THE BURNER DOESN'T START AND STOPS	THE BURNER STARTS AND STOPS	THE BURNER DOESN'T SWITCH TO HIGH FLAME	THE BURNER STOPS DURING OPERATION	THE BURNER STOPS AND REPEATS THE CYCLE DURING OPE-RATION
MAIN SWITCH OPEN	●							
LINE FUSE INTERVENTION	●							
MAX. PRESSURE SWITCH FAULT	●							●
FAN THERMAL CUTOUT INTERVENTION	●							
AUXILIARY RELAIS FUSES INTERVENTION	●							
CONTROL BOX FAULT	●	●		●	●		●	
SERVOCONTROL FAULT						●		
SMOKEY FLAME					●		●	
IGNITION TRANSFORMER FAULT				●				
IGNITION ELECTRODE DIRTY OR WRONG POSITIONED				●				
DIRTY NOZZLE				●			●	
FUEL SOLENOID VALVE DEFECTIVE				●			●	
PHOTORESISTOR DIRTY OR DEFECTIVE					●		●	
HI-LO FLAME THERMOSTAT DEFECTIVE						●		
WRONG POSITION OF SERVOCONTROL CAMS						●		
FUEL PRESSURE TOO LOW				●				
DIRTY FUEL FILTERS			●	●			●	

TROUBLESHOOTING

CAUSE	TROUBLE										
	THE BURNER DOESN'TSTART	CONTINUE WITH PRE-PURGE	DOESN'T START AND LOCK-OUT	DOESN'T START AND REPEATS THE CYCLE	STARTS AND REPEATS THE CYCLE	STARTS AND LOCK-OUT	THE FLAME MONITOR DEVICE DOESN'T GIVECONSENT TO START	DOESEN'T SWITCH TO HIGH FLAME	DOESEN'T RETURN IN LOW FLAME	LOCK-OUT DURING OPERATION	TTURNS OF AND REPEATS CYCLE DURING OPERATION
MAIN SWITCH OPEN	●										
LACK OF GAS	●			●							
MAXIMUM GAS PRESSURE SWITCH DEFECTIVE	●		●								
THERMOSTATS/PRESSURE SWITCHES DEFECTIVES	●			●							●
OVERLOAD TRIPPED INTERVENTION	●										
AUXILIARIES FUSE INTERRUPTED	●										
DEFECTIVE CONTROL BOX	●	●	●			●				●	
DEFECTIVE ACTUATOR	●	●	●								
AIR PRESSURE SWITCH FAULT OR BAD SETTING	●					●	●			●	
MINIMUM GAS PRESSURE SWITCH DEFECTIVE OR GAS FILTER DIRTY	●			●	●		●				●
IGNITION TRANSFORMER FAULT			●								
IGNITION ELECTRODES BAD POSITION			●								
BUTTERFLY VALVE BAD SETTING			●			●					
DEFECTIVE GAS GOVERNOR			●	●	●						●
GAS VALVE DEFECTIVE			●								
BAD CONNECTION OR DEFECTIVE HIGH/LOW FLAME THERMOSTAT OR PRESSURE SWITCH								●	●		
ACTUATOR CAM WRONG SETTING							●	●	●		
UV PROBE DIRTY OR DEFECTIVE			●			●				●	

WIRING DIAGRAMS

Refer to the attached wiring diagrams.

WARNING

1 - Electrical supply 230V / 400V 50Hz 3N a.c.

2 - Do not reverse phase with neutral

3 - Ensure burner is properly earthed

SIEMENS LFL 1.3.. CONTROL BOX

Automatic programme in the event of interruption and indication of position when interrupted

By default, in the event of any kind of interruption, the flow of fuel is immediately interrupted. At the same time the programmer stops and this indicates the position at the time of the interruption.

A symbol on the indicator disc shows each time the type of stoppage:

◄ No start-up (for example fault in the CLOSED signal for the limit contact "Z" at terminal 8 or some other contact between the terminals 12 and 4 or 4 and 5 is not closed).

◄ Start-up suspended because of a fault in the OPEN signal for the limit contact "A" at terminal 8.

P Block due to absence of air pressure signal. From this moment onwards any absence of air pressure will cause a block.

■ Block due to malfunction of the flame detector circuit.

▼ Start-up interrupted because there is a fault in the MINMUM signal for the auxiliary contact of the damper servo motor at terminal 8.

1 Block due to absence of flame signal at the end of the 1st safety period.

From this moment onwards any absence of a flame signal will cause a block.

2 Blockdue to absence of flame signal at the end of the 2nd safety period (flame signal of main burner).

▌ Blockdue to absence of flame signal or air pressure during operation.

Where a block stoppage occurs at any moment between switch on and pre-ignition without registering any symbol, the cause is normally an unscheduled flame signal.

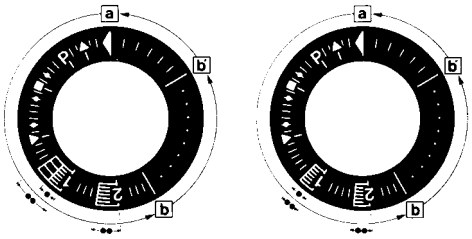

a-b Start-up programme

b-b' For time variants:move the programmer on to the automatic stop after the burner starts up (b' = position of the programmer during normal burner operation).

b(b')-aPost-ventilation programme after a regulation stop.At the start-up position "a" the programmer stops automatically.

. Safety time duration for mono-tube burners

.. Safety time duration for twin-tube burners

The apparatus can be reset immediately after a block. After resetting (and after the elimination of any problem causing the stoppage or after a power failure) the programmer returns to its start-up position. In this event only the terminals 7, 9, 10 and 11 are live in accordance with the monitoring programme. Only after this the device programs a new startup.

Operation

The wiring system and also the control system of the programmer "P" have already been given in this manual. The response signals required for the active parts and the flame monitor circuit are shown by a hatching.

In the absence of these response signals the mechanism interrupts the start-up programme; the exact time of the interruption can be identified from the visual indicator and will cause a block if the safety code requires it.

A consent to start-up by means of the thermostat or pressostat "R"

A-B start-up program

B-C normal burner operation

C regulation stop caused by "R"

C-D programmer returns to start-up position A.

During the regulation stop only terminals 11 and 12 are live and the damper, through the limit contact "Z" of its servo-motor is in the CLOSED position.The flame detector circuit F is activated (terminals 22 and 23 or 23/4) for the detector test and the paracitic light test.

Where the burners do not have dampers (or have an independent 00 damper control mechanism) there must be a bridge between terminals 6 and 8, otherwise the mechanism will not start up the burner.

For a burner to start up the following conditions must be met:

- Mechanism not blocked/reset.
- Damper closed.Limit contact switchZ must be in the CLOSED position and allow current to flow between terminals 11 and 8.
- Any contacts checking that the fuel valve (bv...) is closed, or other contacts with similar functions, must be closed between terminal 12 and the air pressostat LP.
- The contact for the air pressostat LP must be in the off position (LP test) so as to feed terminal 4.
- The gas pressostat contacts GP and the safety thermostat and pressostat contacts W must also be closed.

Start-up program

A Start-up

(R closes the start-up control ring between terminals 4 and 5)

The programmer starts up.At the same time the ventilator motor is fed through terminal 6 (only for pre-ventilation) and, after t7, the ventilator motor or the combustion gas exhaust fan is fed through terminal 7 (pre-ventilation and post-ventilation).

At the end of t16, the command opening the damper passes through terminal 9; during the damper opening time the programmer does not move since terminal 8, through which the programmer is fed, is dead.

Only once the damper is fully open and the limit contact switch A has switched on, feeding terminal 8, does the programme proceed.

t1 Pre-ventilation time with damper fully open (nominal air flow).

Shortly after the beginning of the pre-ventilation time, the air pressostat should switch off the current between terminals 4 and 13;otherwisethe apparatus would block (air pressure monitor).

At the same time the terminal 14 should be live since current feeding the ignition transformer and the fuel valves passes through this circuit.

During pre-ventilation time the flame detector circuit is checked and in the event of an operational defect the monitor brings about a block.

At the end of the pre-ventilation time the monitor automatically moves the damper servo-motor, through terminal 10, to the flame ignition position which is governed by the auxiliary contact "M".

During this period the programmer stops until terminal 8, is again activatedthrough contact "M".

After a few seconds the little programmer motor is directly fed by the active part of the apparatus.

After this point terminal 8 plays no further part in the burner ignition process.

Mono-tube burner

t3 Pre-ignition time waiting the response from the fuel valve at terminal 18.

t2 Safety time (start up flame strenght); at the end of the safety time a flame signal should appear at terminal 22 of the amplifier and it should stay on until a regulation stop; if this does not happen the mechanism will block.

t4 Interval; at the end of t4, terminal 19 is live.

t5 Interval At the end of t5 terminal 20 is live.At the same time the monitor outlets from 9 and 11 and terminal 8 into the active part of the apparatus are kept galvanically separatedso as to protect the monitor itself from recovery voltage through the capacity regulator circuit.

Twin-tube burners (**)

t3 Preignition time until the all clear to the pilot burner valve at terminal 17.

t2 First safety time (pilot flame strenght); at the end of the safety time a flame signal should appear at terminal 22 of the amplifier and it should stay on, until a regulation stop; if it does not, the apparatus will block.

t4 Interval until the consent to the fuel valve at terminal 19, for the first flame of the main burner.

t9 2nd safety time; at the end of the second safety time the main burner should be lit by means of the pilot. At the end of this period, terminal 17 is dead and therefore the pilot burner will be out.

t5 Interval; at the end of t5 terminal 20 is live. At the same time the monitor outlets from 9 to 11 and the terminal 8at the input of the active part of the apparatus are galvanically separated so as to protect the apparatus itself from recovery voltage through the strenght regulator circuit.

When the strenght regulator LR at terminal 20 gives the consent, the start-up programme for the apparatus comes to an end. Depending on time variants, the programmer stops either immediately or at the end of a set time, without effecting the position of the contacts.

B Operational position of the burner

B-C Burner operation (production of heat)

While the burner is working the strnght regulator controls the damper, according to the demand for heat, by means of the positioning at nominal load of the auxiliary contact "V" of the damper servocontrol.

C Regulation stop for operation of "R"

When there is a regulation stop the fuel valves immediately close. At the same time the programmer starts to programme:

t6 Post-ventilation time (post-ventilation with the ventilator "G" at terminal 7).Shortly after beginning of the post-ventilation time terminal 10 becomes live and moves the damper to the "MIN" position. The full closure of the damper only happens towards the end of the post-ventilation time and is prompted by an automatic signal from terminal 11

t13 Admissible post-ignition time

During this time the flame monitor circuit may still receive a flame signal without the apparatus blocking.

D-A End of automatic programme

At the end of t6, at the point where the programmer and the automatic contacts have reverted to the starter position, the detection probe test restarts.

During an operational stop even an unscheduled flame signal lasting a few seconds can cause a block because during this period an NTC in the circuit acts as retarder.This means that brief unscheduled influences cannot cause a block.

(**) Times t3, t2 and t4 only apply only to safety devices in the series 01.

Specifications

Mains voltage	220V -15%...240V +10%
Frequency	50Hz -6%...60Hz +6%
Absorbed capacity	3.5 VA
Built-in fuse	T6.3/250E slow action DIN41571 No. 451915070
External fuse	max. 16A
Interference	N-VDE0875
Flow permitted at terminal 1	5A (DIN 0660 AC3)
Flow permitted at control terminals	4A (DIN 0660 AC3)
Flow at monitor contacts:	
input at terminals 4 & 5	1A, 250V
input at terminals 4 & 11	1A, 250V
input at terminals 4 & 14	function of the load at terminals 16 and 19, min.1A, 250V
Emplacement	Any
Protection	IP40
Permitted ambient temp	-20...+60° C
Min.temperature (trans/storage)	-50° C
Weight:	
apparatus	approx. 1,000g.
base	approx. 165g.

Ionisation monitor

voltage in detector electrode	
normal working	330V ±10%
test	380V ±10%
short circuit current	max. 0,5 mA
Ionisation current, min.request	6 µA
max. permitted length for connecting cables	
normal cable (laid separately**)	80m
armoured cable(high frequency)	protection at terminal 22 140m

UV monitor

Voltage in UV detector	
normal working	330V ±10%
test	380V ±10%
Detector current, min. request*	70µA
Max. detector current	
normal working	630 µA
test	1300 µA
Max.length of connecting cable	
normal cable (laid separately**)	100m
armoured cable (high frequency)	protected at terminal 22 200m
Weight	
QRA2	60 g
QRA10	450 g.

*Connect up in parallel to the measuring device a condenser 100µF, 10...25V.

** The wire connecting up the detector electrode should not be in the same sleeve as the other conductor wires.

Ignition spark monitor with QRE1 series 02 detector

Minimum detector current	30µA

Operating times

t7 initial delay for ventilator G2	2	
t16 initial delay of air damper OPEN consent		4
t11 opening time for damper	any	
t10 initial delay for air pressure monitor	8	
t1 pre-ventilation time with damper open	36	
t12 travel time for air damper to MIN position	any	
t3 t3' pre-ignition time	t3	4
	t3	'-
t2 t2' safety time (1st safety time for burners with intermittent pilot lighter	t2	2
	t2	'-
t4 t4' interval between start of t2 and response to valve at terminal 19	t4	10
	t4	'-
t9 2nd safety time for burners with intermittent pilot lighter	2	
t5 interval between end of t4 and response at terminal 20	10	
t20 interval before programmer cuts out after start-up- duration of start-up		60
t6 post-ventilation time (G2 only)		12
t13 permitted post-ignition time		12
t16 initial delay from opening consent of the air damper		

t20 interval until the automatic shut-off of the programming mechanism after the burner start

Key

A	limit contact switch for damper OPEN position
AI	block remote signal
AR	main relay (working network) with contacts "ar"
AS	Monitor fuse
BR	block relay with "br" contacts
BV	fuel valve
EK	reset button
FE	detector electrode of ionisation circuit
FR	flame relay with "fr" contacts
G	ventilator motor or burner motor
GP	gas pressure switch
H	main interruptor switch
L	block stoppage LED
LK	air damper
LP	air pressostat
LR	safety regulator
M	auxiliary contact switch for damper "MIN" position
QRA	UV detector
QRE	ignition spark detector
R	thermostat or pressostat
S	fuse
SA	damper servo-motor
SM	synchronous programmer motor
V	flame signal amplifier
V	in case of servo-motor: auxiliary contact for response to fuel valve with regard of damper position
W	safety pressostat or thermostat
Z	ignition transformer
Z	in case of servomotor: end of limit contact switch for damper CLOSED position
ZBV	pilot burner fuel valve
°	for mono-tube burners
°°	for twin-tube burners

(1)	input for raising QRA detector voltage to test level
(2)	input for excitation of flame relay during flame detector test circuit (contact XIV) and during safety time (contact IV)
(3)	Do not press EK for more than 10 seconds

Programmer diagram

t1	pre-ventilation time
t2	safety time
*t2	'1st safety time
t3	pre-ignition time
*t3	'pre-ignition time
t4	interval for creating current between terminals 18 and 19
*t4	'interval for creating current between terminals 17 and 19
t5	interval for creating current between terminals 19 and 20
t6	post-ventilation time
t7	interval between startup consent and current created at terminal 7
t8	duration of start-up
*t9	2nd safety time
t10	interval before air pressure monitoring begins
t11	damper opening travel time
t12	damper closure travel time
t13	permissible post-combustion time
t16	initial delay of damper OPEN response
t20	interval before programmer automatically stops

* These times are valid with the use of a series 01 safety device for monitoring burners with intermittent pilot lighter.

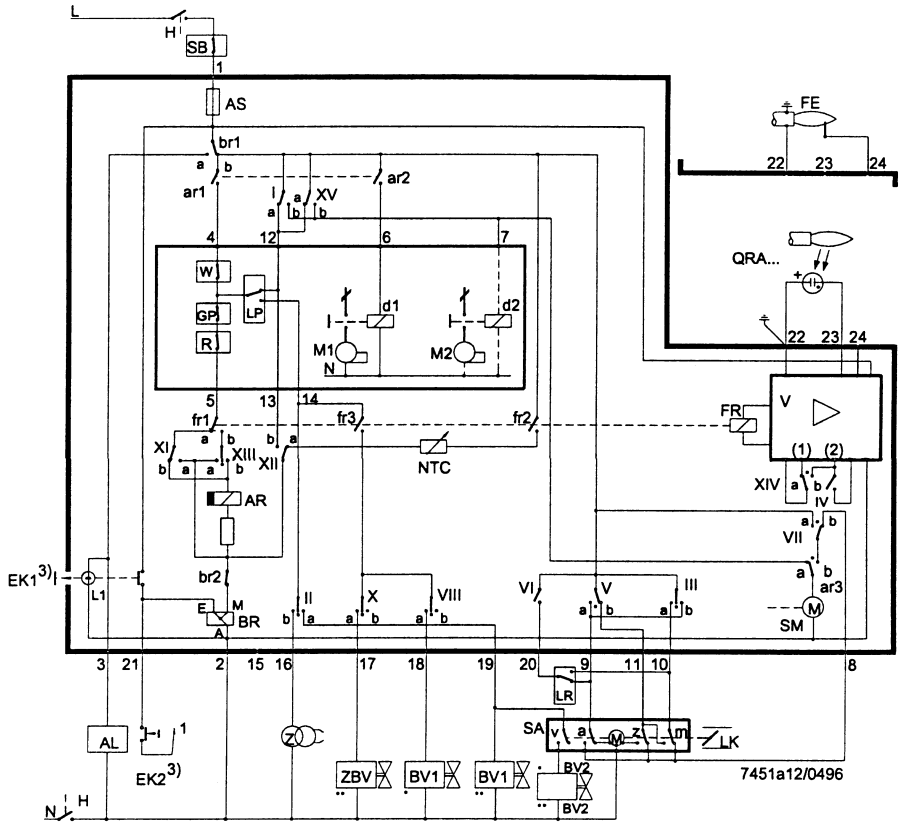
L
H
SB
1
AS
br1
ar1
ar2
XV
W
GP
R
LP
d1
d2
M1
M2
N
FE
22
23
24
QRA...
V
FR
(1) (2)
XIV
IV
VII
ar3
SM
fr1
fr3
fr2
XI
XIII
XII
NTC
AR
EK1 3)
L1
br2
E
M
BR
A
II
X
VIII
VI
III
3
21
2
15
16
17
18
19
20
9
11
10
8
LR
AL
EK2 3)
ZBV
BV1
BV2
SA
LK
7451a12/0496

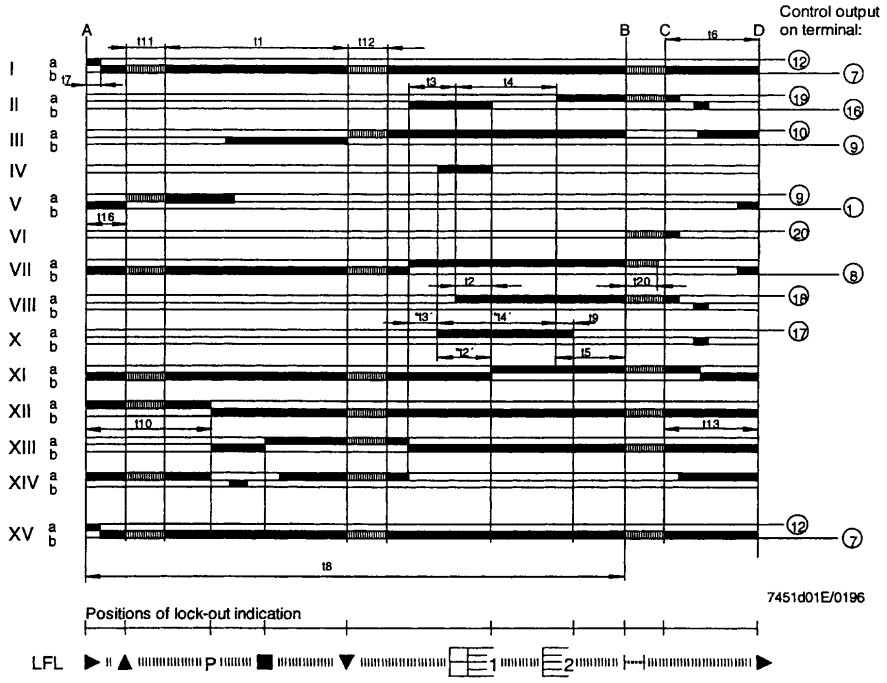
Control output on terminal:
A
B
C
D
t11
t1
t12
t6
t7
t3
t4
t16
t2
t20
t13'
t14'
t9
t12'
t5
t10
t13
t8
I
II
III
IV
V
VI
VII
VIII
X
XI
XII
XIII
XIV
XV
7451d01E/0196
Positions of lock-out indication
LFL
P
1
2

C.I.B. UNIGAS S.p.A.
Via L.Galvani, 9 - 35011 Campodarsego (PD) - ITALY
Tel. +39 049 9200944 - Fax +39 049 9200945/9201269
web site: www.cibunigas.it - e-mail: cibunigas@cibunigas.it

Note: specifications and data subject to change. Errors and omissions excepted.

CIB UNIGAS

WIRING DIAGRAMS

SE05-706: progressive burners
SE05-709: fully-modulating burners

ELECTRICAL WIRING DIAGRAMS

WIRING DIAGRAM Cod. 05-706 - Progressive burners

WIRING DIAGRAM Cod. 05-709 - Fully-modulating burners

Keys

BP	Oil pump contactor coil
BR	Contactor coil for oil pre-heater resistors
BV	Fan motor contactor coil
CAP	Auxiliary contacts on oil pump motor contactor
CAR	Auxiliary contacts on oil pre-heater resistor contactor
CM	Operation selector 0) Off - 1) Gas - 2) Oil
CMF	Manual operation selector 0) Stop - 1) High flame - 2) Low flame - 3) Automatic
CP	Contacts on oil pump motor contactor
CR	Contacts on oil pre-heater resistor contacto
CR1÷3	Contacts on auxiliary relais
CTP	Contacts on oil pump motor thermal cutout
CTV	Contacts on fan motor thermal cutout
CV	Contacts on fan motor contactor
EV1	Gas solenoid valve, network side (or valves group)
EV2	Gas solenoid valve, burner side (or valves group)
EVN	Oil solenoid valve
F÷F4	Fuses
FC	UV probe
FU1.0	Line fuse
FU1.1	Auxiliary line fuse
FU1.2/3/4	Line fuse
FU1.5	Pump line fuse
IG	Main switch
IR	Pre-heater resistor switch
IRA	Pre-heater resistor switch
IRA aux.	Auxiliary resistor line switch
KA2.1 - KA4.4	Auxiliary relay
KA2.5	Pre-heater resistor contactor (RP)
KA2.8	Fan motor contactor
KA3.2	Oil pump motor contactor
L	Phase
LAF	High flame operation signaling lamp
LB	Burner lockout signalling lamp
LBF	Low flame operation signalling lamp
LEV1	Opening of EV1 signalling lamp
LEV2	Opening of EV2 signalling lamp
LEVN	Opening of EVN signalling lamp
LFL1.3..	SIEMENS control box
LPGMIN	Low gas pressure in the network signalling lamp
LS	Burner in stop position (STAND-BY) signalling lamp
LSPG	Gas valves leakage signalling lamp
LT	Intervention of thermal cutout signalling lamp
LTA	Ignition transformer in operation signalling lamp
LTRS	Safety thermostat lockout signalling lamp
MA	Burner power supply terminal board
MC	Burner components terminal board
MP	Pump motor
MV	Fan motor
N	Neutral
PA	Air pressure switch
PGMAX	Maximum gas pressure switch (optional, if fitted remove the connection between terminals 156 e 158 in terminal board MC)
PGMIN	Minimum gas pressure switch
PS	Reset pushbutton for LFL1.3xx
Pt100	Connection for Pt100
R1÷R3	Auxiliary relais
RA	Auxiliary resistors
RA1	Auxiliary resistors
RP	Pre-heater oil tank resistors
RWF40.000	SIEMENS modulator
SD 0/4÷20mA	Probe connection with signal 0÷20 mA / 4÷20 mA

SD-0÷10V	Probe connection with signal 0÷10V
SD-PRESS	Pressure probe connection (SIEMENS QBE620...)
SD-TEMP	Temperature probe connection (Pt1000 or SIEMENS QAE2..-QAC2..)
SQL/SQM/STM	Actuator for air damper
ST	Series of thermostats or pressure switches
TA	Ignition transformer
TAB	Hi-Lo flame thermostat (if fitted remove the connection between terminals 6 and 7 on terminal board MA)
TC	Thermocoupling
TCI	Plant enabling thermostat
TCN	Oil enabling thermostat
TP	Oil pump motor thermal cutout
TR	Oil pre-heater resistor thermostat
TRS	Oil pre-heater resistor safety thermostat
TV	Fan motor thermal cutout
VPS504	DUNGS gas proving system (optional, if fitted remove the connection between 177 and 178 on terminal board MC)

Note: It is recommednded to execute the external mains connections in the way that any IR switch opening causes the burner lockout by cutting off the burner monophase power supply.
Terminals Q13 and Q14 are contacts of a limit switch that stops the burner if the set parameters overcome the fixed differential.

SIEMENS SQL33 ACTUATOR CAMS	BERGER STM30 ACTUATOR CAMS	SIEMENS SQM40 ACTUATOR CAMS	DESCRIPTION
Y1	I	I	High flame
Y2	II	II	Stand-by and ignition
3	III	III	Low flame GAS
6	V	IV	Low flame OIL

ATTENTION:
1 - Electrical supply 400V 50Hz 3N a.c.
2 - Don’t reverse phase with neutral
3 - Ensure to the burner a proper hearthing

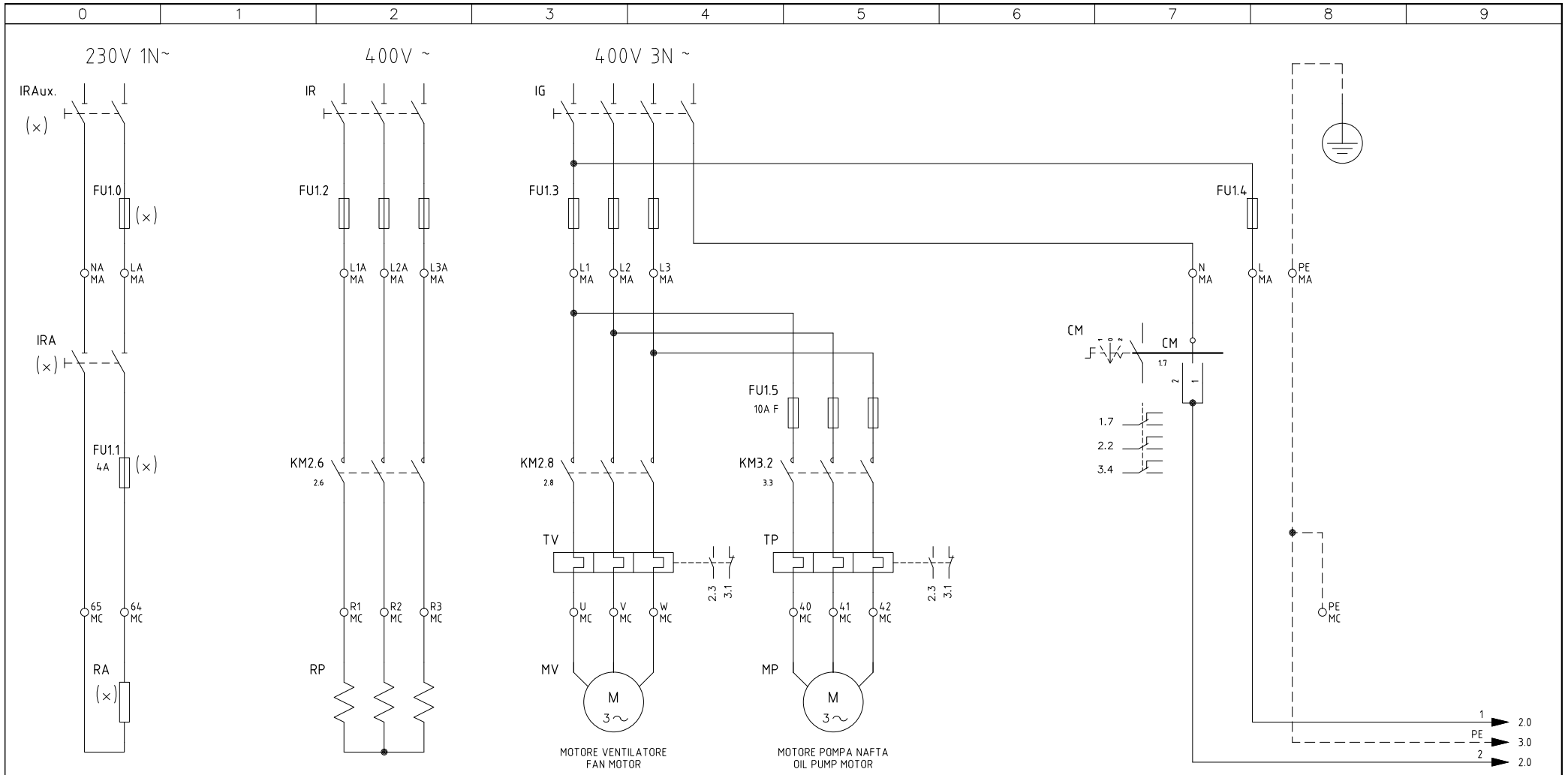

(x)
UTILIZZATO SOLO PER VERSIONI "NAFTA DENSA"
USED FOR "HEAVY OIL" VERSIONS ONLY

Data 05/12/2002		PREC.	FOGLIO
Revisione 05		/	1
Dis. N. 05 – 706		SEGUE	TOTALE
		2	8

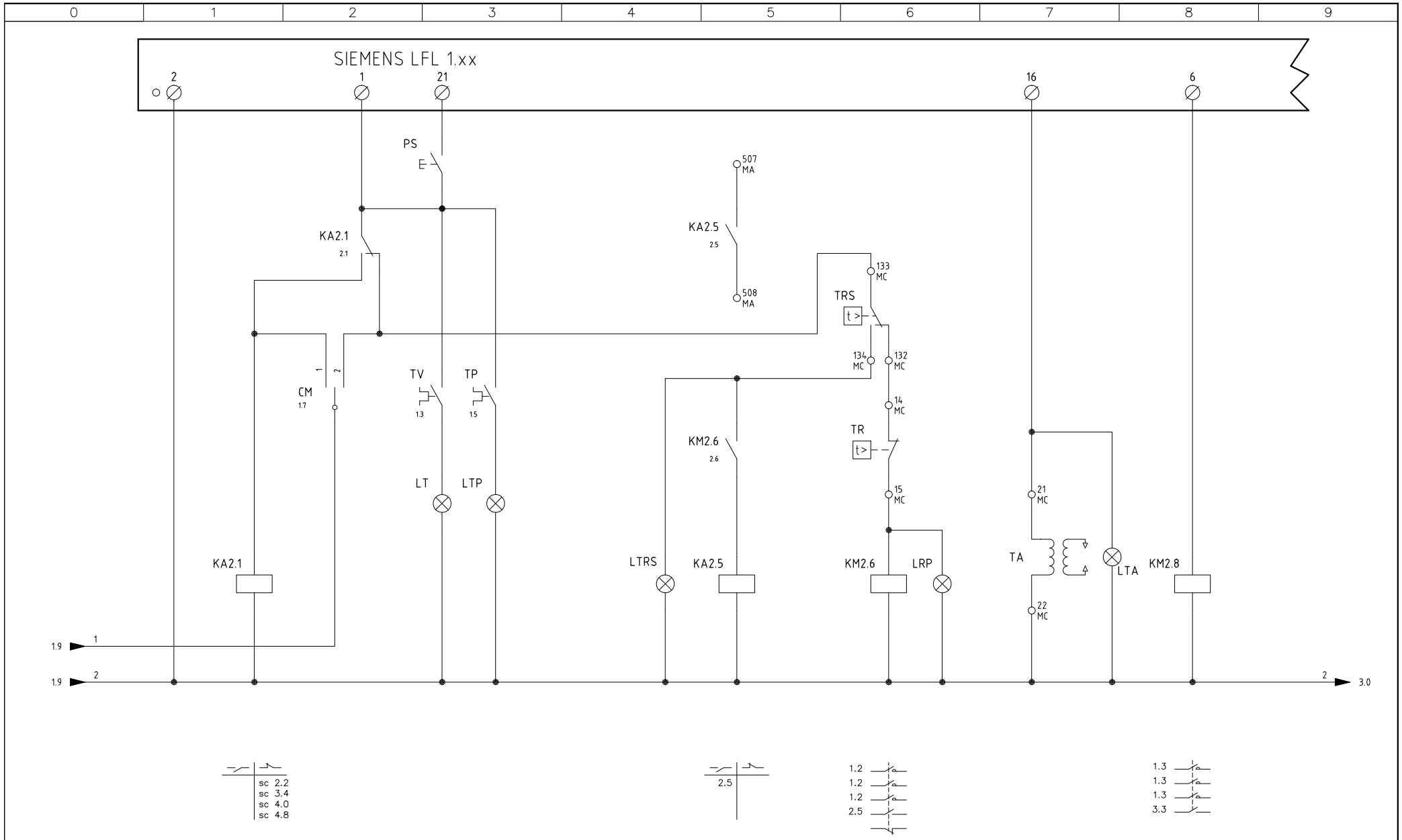

Data 05/12/2002		PREC.	FOGLIO
Revisione 05		1	2
Dis. N. 05 – 706		SEGUE	TOTALE
		3	8

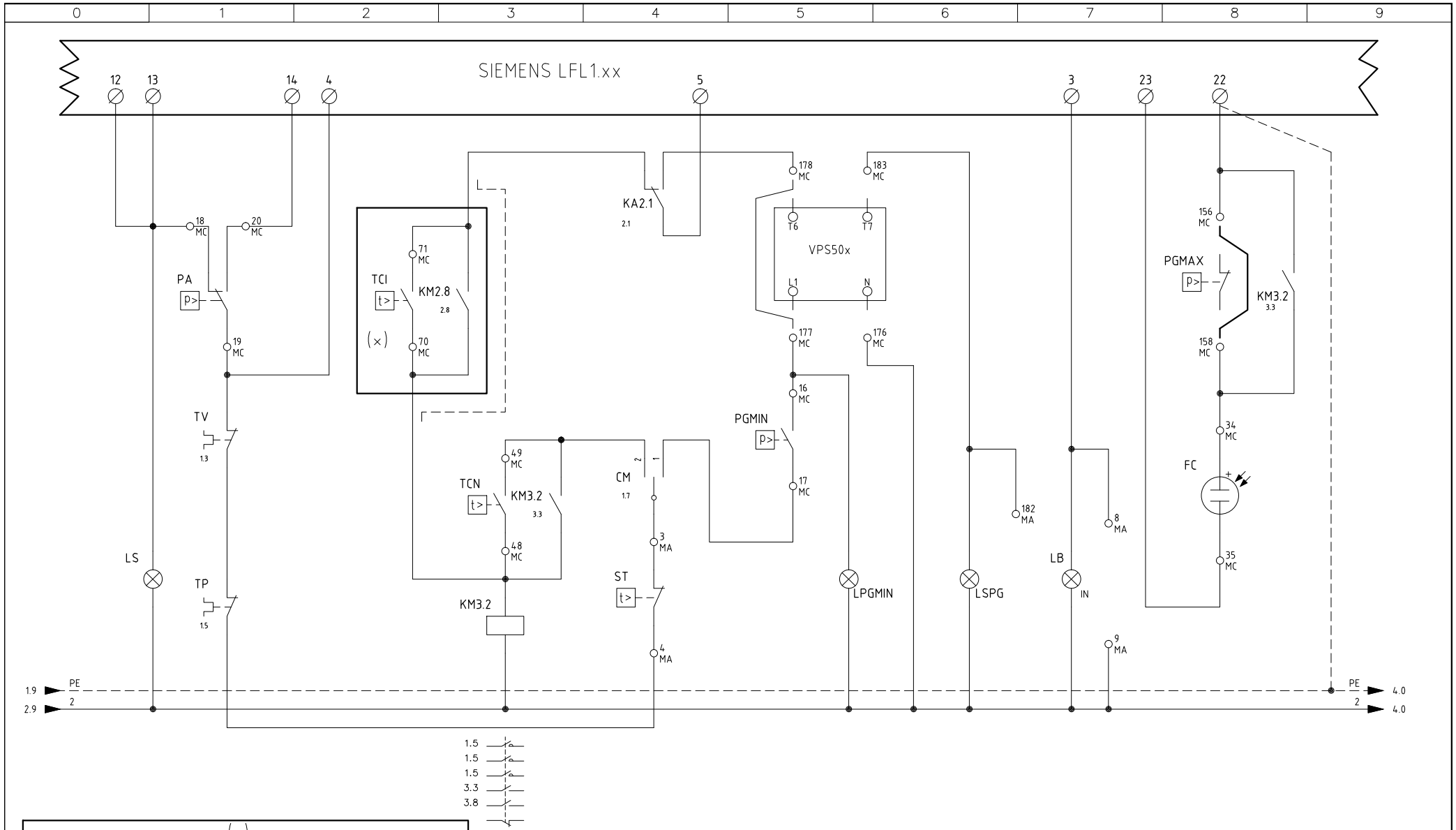

(x)
UTILIZZATO SOLO PER VERSIONI "NAFTA DENSA"
USED FOR "HEAVY OIL" VERSIONS ONLY

Data 05/12/2002		PREC.	FOGLIO
Revisione 05		2	3
Dis. N. 05 – 706		SEGUE	TOTALE
		4	8

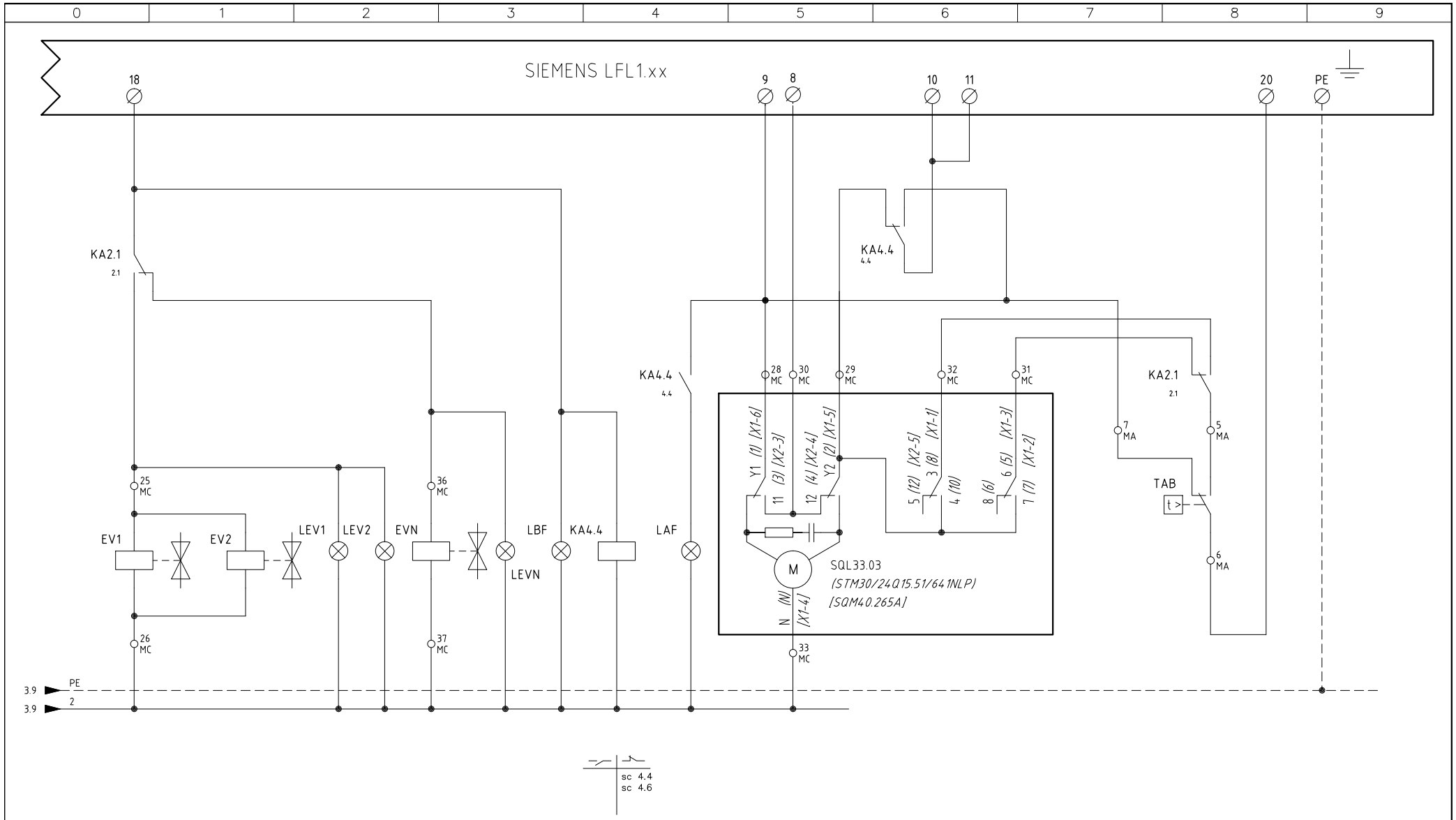

Data 05/12/2002		PREC.	FOGLIO
Revisione 05		3	4
Dis. N. 05 – 706		SEGUE	TOTALE
		5	8

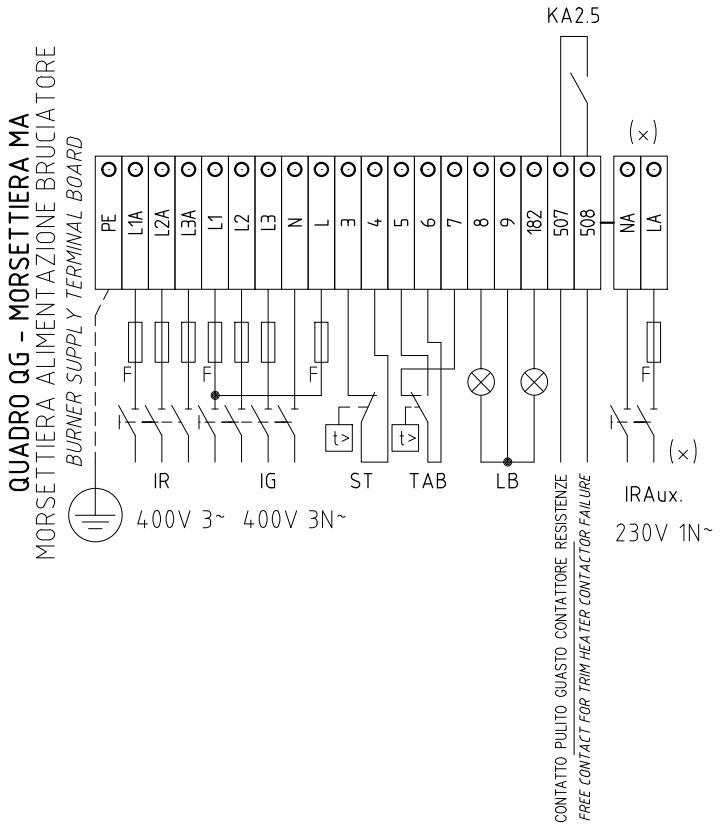

(x)
UTILIZZATO SOLO PER VERSIONI "NAFTA DENSA"
USED FOR "HEAVY OIL" VERSIONS ONLY

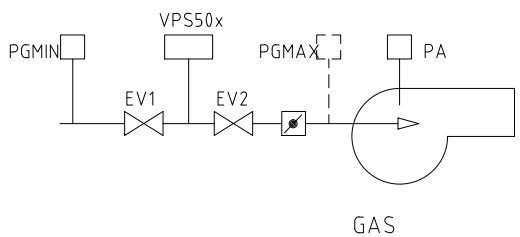

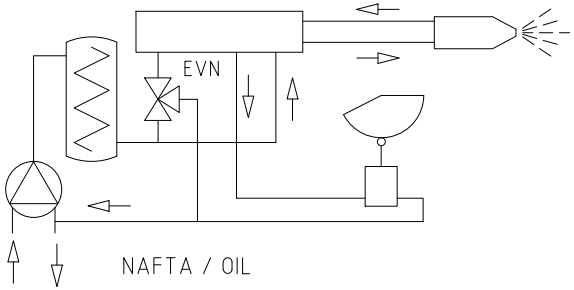

Data 05/12/2002		PREC.	FOGLIO
Revisione 05		4	5
Dis. N. 05 – 706		SEGUE	TOTALE
		6	8

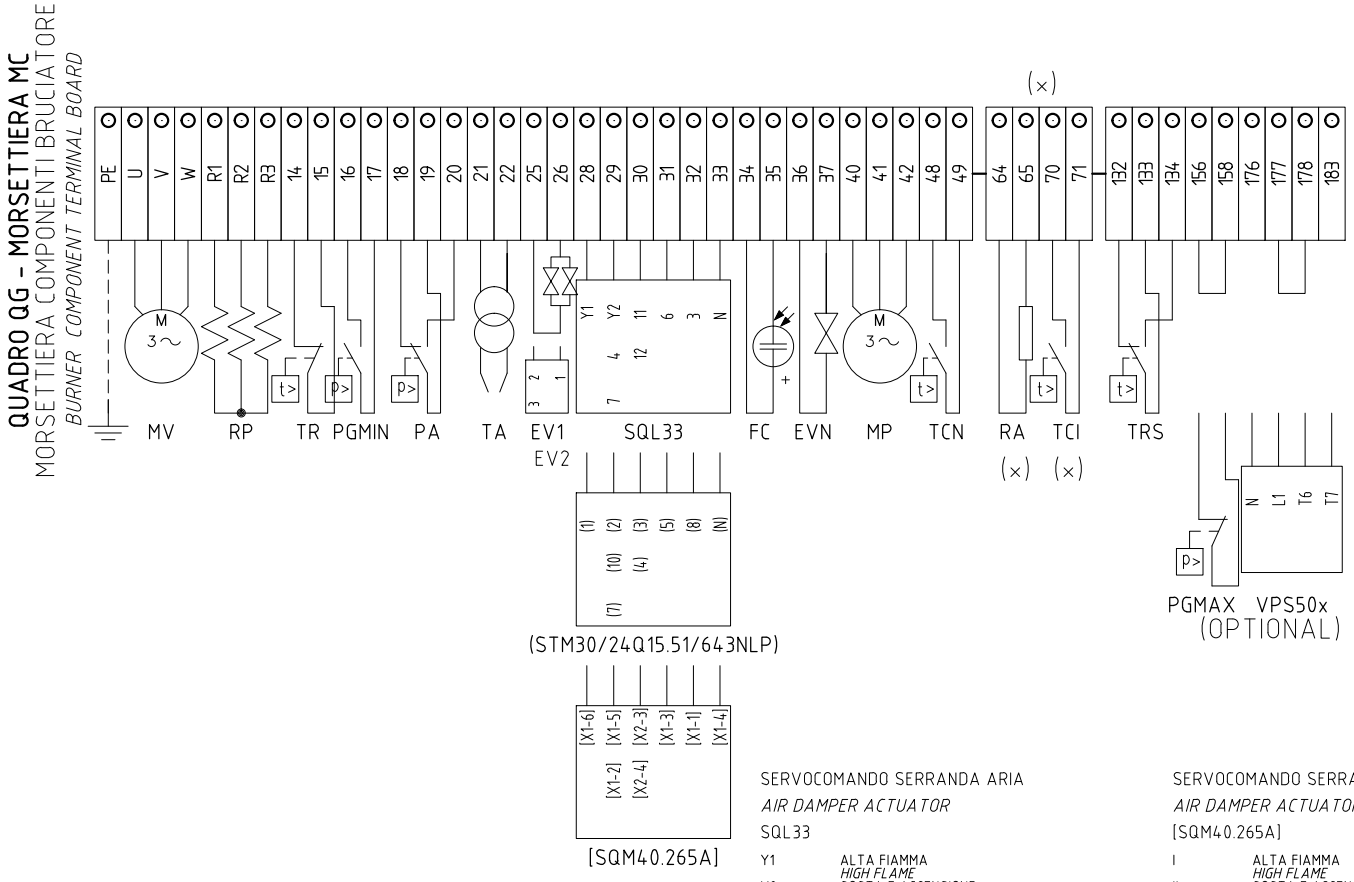

(x)
UTILIZZATO SOLO PER VERSIONI "NAFTA DENSA"
USED FOR "HEAVY OIL" VERSIONS ONLY

SERVOCOMANDO SERRANDA ARIA
AIR DAMPER ACTUATOR
SQL33

Y1	ALTA FIAMMA *HIGH FLAME*
Y2	SOSTA E ACCENSIONE *STAND-BY AND IGNITION*
3	BASSA FIAMMA GAS *GAS LOW FLAME*
6	BASSA FIAMMA NAFTA *OIL LOW FLAME*

SERVOCOMANDO SERRANDA ARIA (ALTERNATIVO)
AIR DAMPER ACTUATOR (ALTERNATIVE)
[SQM40.265A]

I	ALTA FIAMMA *HIGH FLAME*
II	SOSTA E ACCENSIONE *STAND-BY AND IGNITION*
III	BASSA FIAMMA GAS *GAS LOW FLAME*
IV	BASSA FIAMMA NAFTA *OIL LOW FLAME*

SERVOCOMANDO SERRANDA ARIA (ALTERNATIVO)
AIR DAMPER ACTUATOR (ALTERNATIVE)
(STM30/24Q15.51/641NLP)

I	ALTA FIAMMA *HIGH FLAME*
II	SOSTA E ACCENSIONE *STAND-BY AND IGNITION*
III	BASSA FIAMMA GAS *GAS LOW FLAME*
V	BASSA FIAMMA NAFTA *OIL LOW FLAME*

Data 05/12/2002		PREC.	FOGLIO
Revisione 05		5	6
Dis. N. 05 – 706		SEGUE	TOTALE
		7	8

	SIGLA/ITEM	FOGLIO/SHEET	FUNZIONE	FUNCTION
	(STM30/24Q15.51/641NLP)	4	SERVOCOMANDO SERRANDA ARIA (ALTERNATIVO)	AIR DAMPER ACTUATOR (ALTERNATIVE)
	[SQM40.265A]	4	SERVOCOMANDO SERRANDA ARIA (ALTERNATIVO)	AIR DAMPER ACTUATOR (ALTERNATIVE)
	CM	1	COMMUTATORE FUNZIONAMENTO 1)METANO 0)SPENTO 2)BIOGAS	MANUAL OPERATION SWITCH 1)NATURAL GAS 0)OFF 2)BIOGAS
	EV1	4	ELETTROVALVOLA GAS LATO RETE (O GRUPPO VALVOLE)	UPSTREAM GAS SOLENOID VALVE (OR VALVES GROUP)
	EV2	4	ELETTROVALVOLA GAS LATO BRUCIATORE (O GRUPPO VALVOLE)	DOWNSTREAM GAS SOLENOID VALVE (OR VALVES GROUP)
	EVN	4	ELETTROVALVOLA NAFTA	OIL SOLENOID VALVE
	FC	3	SONDA UV RILEVAZIONE FIAMMA	UV FLAME DETECTOR
(x)	FU1.0	1	FUSIBILE LINEA RESISTENZE AUSILIARIE	LINE AUXILIARY RESISTORS FUSE
(x)	FU1.1	1	FUSIBILE RESISTENZE AUSILIARIE	AUXILIARY RESISTORS FUSE
	FU1.2	1	FUSIBILI DI LINEA	LINE FUSES
	FU1.3	1	FUSIBILI DI LINEA	LINE FUSES
	FU1.4	1	FUSIBILE DI LINEA	LINE FUSE
	FU1.5	1	FUSIBILI LINEA POMPA	PUMP LINE FUSES
	IG	1	INTERRUTTORE GENERALE	MAINS SWITCH
	IR	1	INTERRUTTORE LINEA RESISTENZE PRERISCALDATORE	PRE-HEATING RESISTORS LINE SWITCH
(x)	IRA	1	INTERRUTTORE RESISTENZE AUSILIARIE	AUXILIARY RESISTORS SWITCH
(x)	IRAux.	1	INTERRUTTORE RESISTENZE AUSILIARIE	AUXILIARY RESISTORS SWITCH
	KA2.1	2	RELE' AUSILIARIO	AUXILIARY RELAY
	KA2.5	2	RELE' AUSILIARIO SEGNALAZIONE GUASTO CONTATTORE RESISTENZE	AUXILIARY RELAY FOR TRIM HEATER CONTACTOR FAILURE
	KA4.4	4	RELE' AUSILIARIO	AUXILIARY RELAY
	KM2.6	2	CONTATTORE RESISTENZE PRERISCALDATORE [RP]	PRE-HEATING RESISTORS [RP] CONTACTOR
	KM2.8	2	CONTATTORE MOTORE VENTILATORE	FAN MOTOR CONTACTOR
	KM3.2	3	CONTATTORE MOTORE POMPA NAFTA	OIL PUMP MOTOR CONTACTOR
	LAF	4	LAMPADA SEGNALAZIONE ALTA FIAMMA BRUCIATORE	BURNER IN HIGH FLAME INDICATOR LIGHT
	LB	3	LAMPADA SEGNALAZIONE BLOCCO BRUCIATORE	INDICATOR LIGHT FOR BURNER LOCK-OUT
	LBF	4	LAMPADA SEGNALAZIONE BASSA FIAMMA BRUCIATORE	BURNER IN LOW FLAME INDICATOR LIGHT
	LEV1	4	LAMPADA SEGNALAZIONE APERTURA [EV1]	INDICATOR LIGHT FOR OPENING OF ELECTRO-VALVE [EV1]
	LEV2	4	LAMPADA SEGNALAZIONE APERTURA [EV2]	INDICATOR LIGHT FOR OPENING OF ELECTRO-VALVE [EV2]
	LEVN	4	LAMPADA SEGNALAZIONE APERTURA [EVN]	INDICATOR LIGHT FOR OPENING OF ELECTRO-VALVE [EVN]
	LPGMIN	3	LAMPADA SEGNALAZIONE PRESENZA GAS IN RETE	INDICATOR LIGHT FOR PRESENCE OF GAS IN THE NETWORK
	LRP	2	LAMPADA SEGNALAZIONE FUNZIONAMENTO PRERISCALDATORE [RP]	INDICATOR LIGHT FOR PRE-HEATING RESISTOR [RP] OPERATION
	LS	3	LAMPADA SEGNALAZIONE SOSTA BRUCIATORE	INDICATOR LIGHT FOR BURNER STAND-BY

(x)
UTILIZZATO SOLO PER VERSIONI "NAFTA DENSA"
USED FOR "HEAVY OIL" VERSIONS ONLY

	SIGLA/ITEM	FOGLIO/SHEET	FUNZIONE	FUNCTION
	LSPG	3	LAMPADA SEGNALAZIONE BLOCCO CONTROLLO TENUTA VALVOLE	INDICATOR LIGHT FOR LEAKAGE OF VALVES
	LT	2	LAMPADA SEGNALAZIONE BLOCCO TERMICO MOTORE VENTILATORE	INDICATOR LIGHT FOR FAN OVERLOAD TRIPPED
	LTA	2	LAMPADA SEGNALAZIONE TRASFORMATORE DI ACCENSIONE	IGNITION TRANSFORMER INDICATOR LIGHT
	LTP	2	LAMPADA SEGNALAZIONE BLOCCO TERMICO POMPA	INDICATOR LIGHT FOR PUMP OVERLOAD TRIPPED
	LTRS	2	LAMPADA SEGNALAZIONE BLOCCO TERMOSTATO DI SICUREZZA [TRS]	INDICATOR LIGHT FOR [TRS] SAFETY THERMOSTAT
	MP	1	MOTORE POMPA NAFTA	OIL PUMP MOTOR
	MV	1	MOTORE VENTILATORE	FAN MOTOR
	PA	3	PRESSOSTATO ARIA	AIR PRESSURE SWITCH
	PGMAX	4	PRESSOSTATO GAS DI MASSIMA PRESSIONE (OPTIONAL)	MAXIMUM PRESSURE GAS SWITCH (OPTIONAL)
	PGMIN	3	PRESSOSTATO GAS DI MINIMA PRESSIONE	MINIMUM GAS PRESSURE SWITCH
	PS	2	PULSANTE SBLOCCO FIAMMA	LOCK-OUT RESET BUTTON
(x)	RA	1	RESISTENZE AUSILIARIE	AUXILIARY RESISTORS
	RP	1	RESISTENZE PRERISCALDATORE NAFTA	PRE-HEATING TANK RESISTORS
	SIEMENS LFL 1.xx	2	APPARECCHIATURA CONTROLLO FIAMMA	CONTROL BOX
	SQL33.03	4	SERVOCOMANDO SERRANDA ARIA	AIR DAMPER ACTUATOR
	ST	3	SERIE TERMOSTATI/PRESSOSTATI	SERIES OF THERMOSTATS OR PRESSURE SWITCHES
	TA	2	TRASFORMATORE DI ACCENSIONE	IGNITION TRANSFORMER
	TAB	4	TERMOSTATO/PRESSOSTATO ALTA-BASSA FIAMMA	HIGH-LOW THERMOSTAT/PRESSURE SWITCHES
(x)	TCI	3	TERMOSTATO CONSENSO IMPIANTO	PLANT CONSENT THERMOSTAT
	TCN	3	TERMOSTATO CONSENSO NAFTA	OIL CONSENT THERMOSTAT
	TP	1	TERMICO MOTORE POMPA	PUMP MOTOR THERMAL
	TR	2	TERMOSTATO DI REGOLAZIONE PRERISCALDATORE [RP]	REGULATION THERMOSTAT FOR PRE-HEATING [RP] RESISTORS
	TRS	2	TERMOSTATO DI SICUREZZA PRERISCALDATORE [RP]	PRE-HEATING [RP] A SAFETY THERMOSTAT
	TV	1	TERMICO MOTORE VENTILATORE	FAN MOTOR THERMAL
	VPS50x	3	CONTROLLO TENUTA VALVOLE (OTIONAL)	GAS PROVING SYSTEM (OPTIONAL)

(x)
UTILIZZATO SOLO PER VERSIONI "NAFTA DENSA"
USED FOR "HEAVY OIL" VERSIONS ONLY

Data 05/12/2002	PREC.	FOGLIO
Revisione 05	7	8
Dis. N. 05 – 706	SEGUE	TOTALE
	/	8

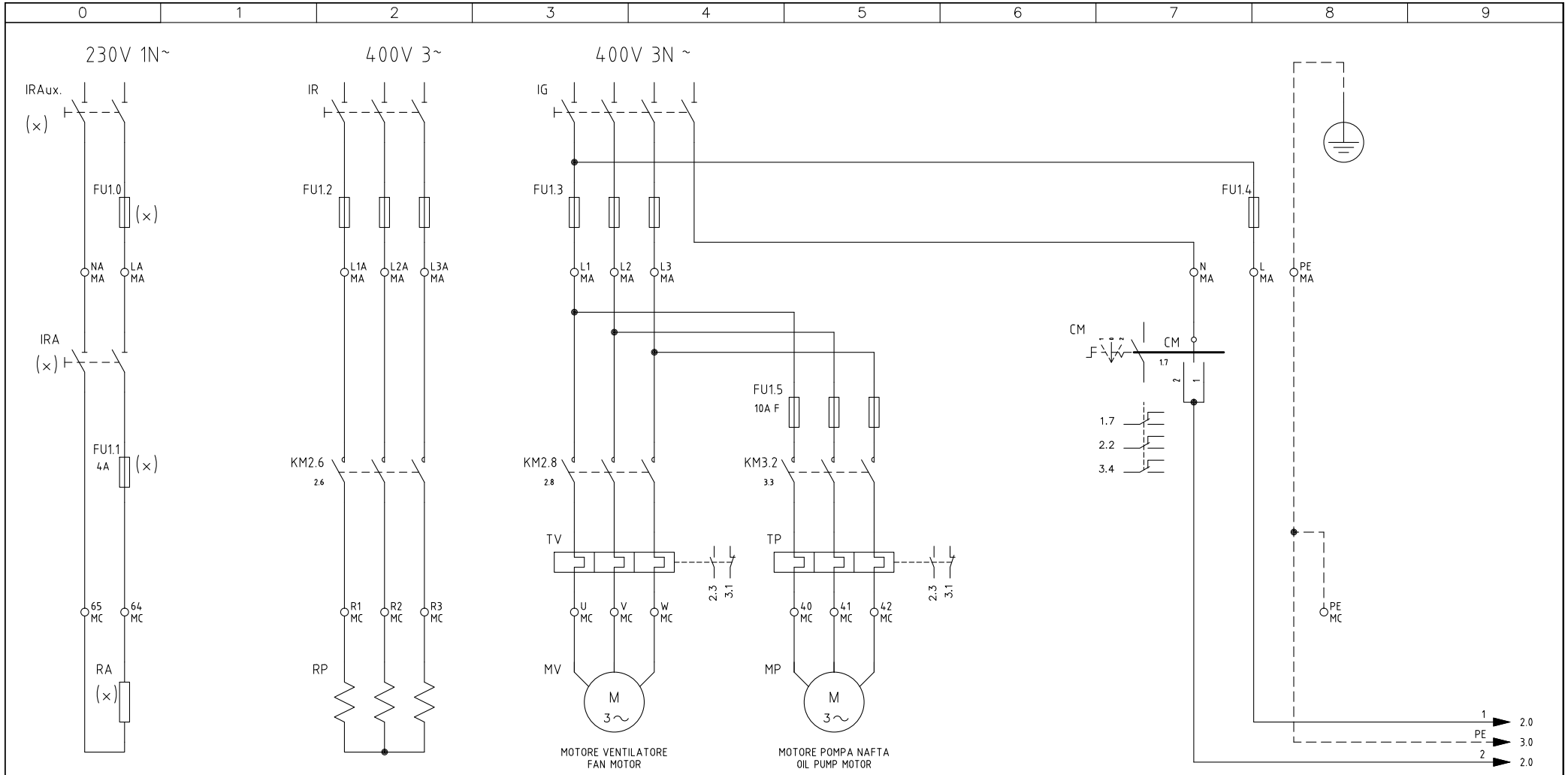

(x)
UTILIZZATO SOLO PER VERSIONI "NAFTA 400 cSt a 50 °C"
USED FOR "OIL 400 cSt a 50 °C" VERSIONS ONLY

Data 06/12/2002		PREC.	FOGLIO
Revisione 08		/	1
Dis. N. 05 – 709		SEGUE	TOTALE
		2	9

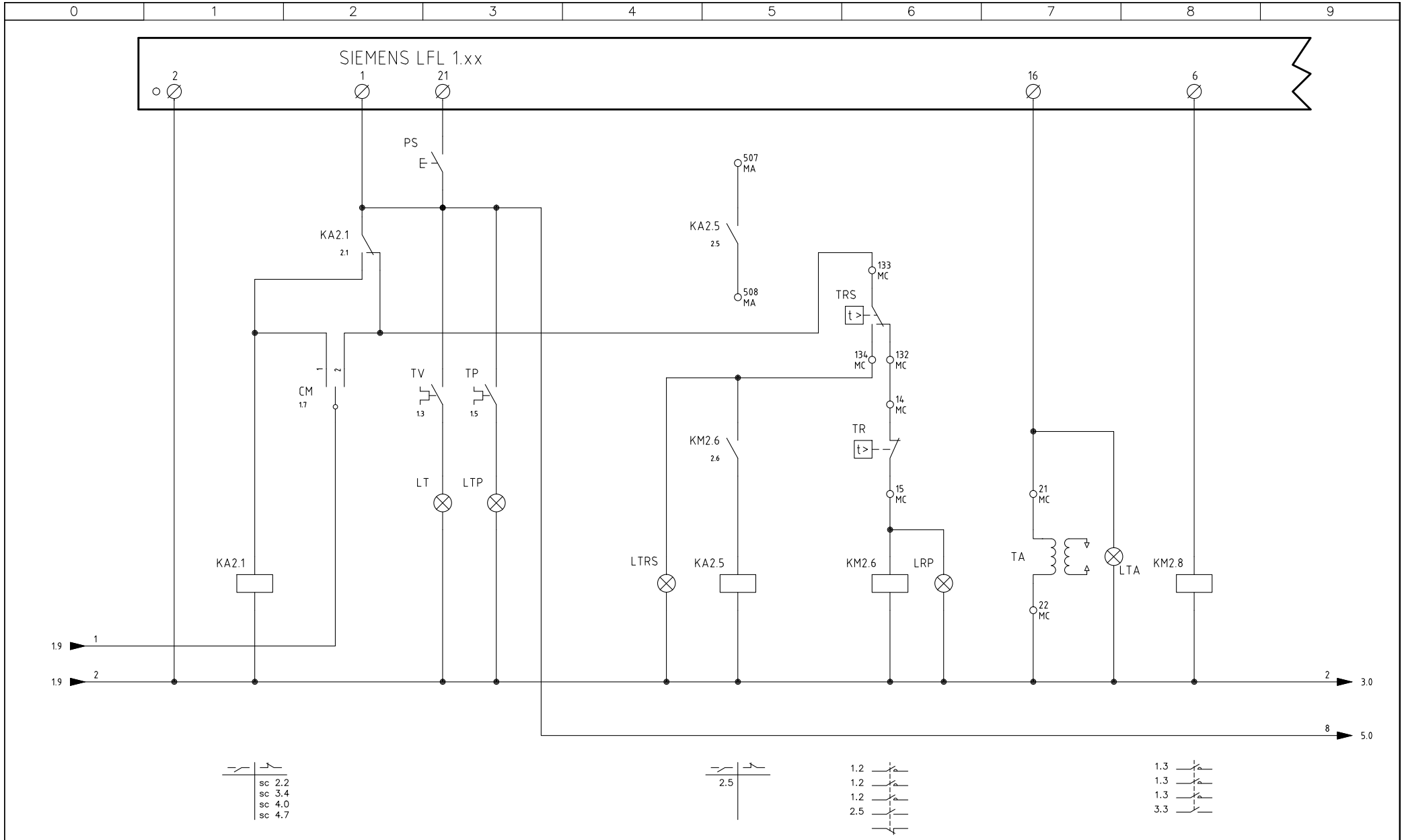

Data 06/12/2002		PREC.	FOGLIO
Revisione 08		1	2
Dis. N. 05 – 709		SEGUE	TOTALE
		3	9

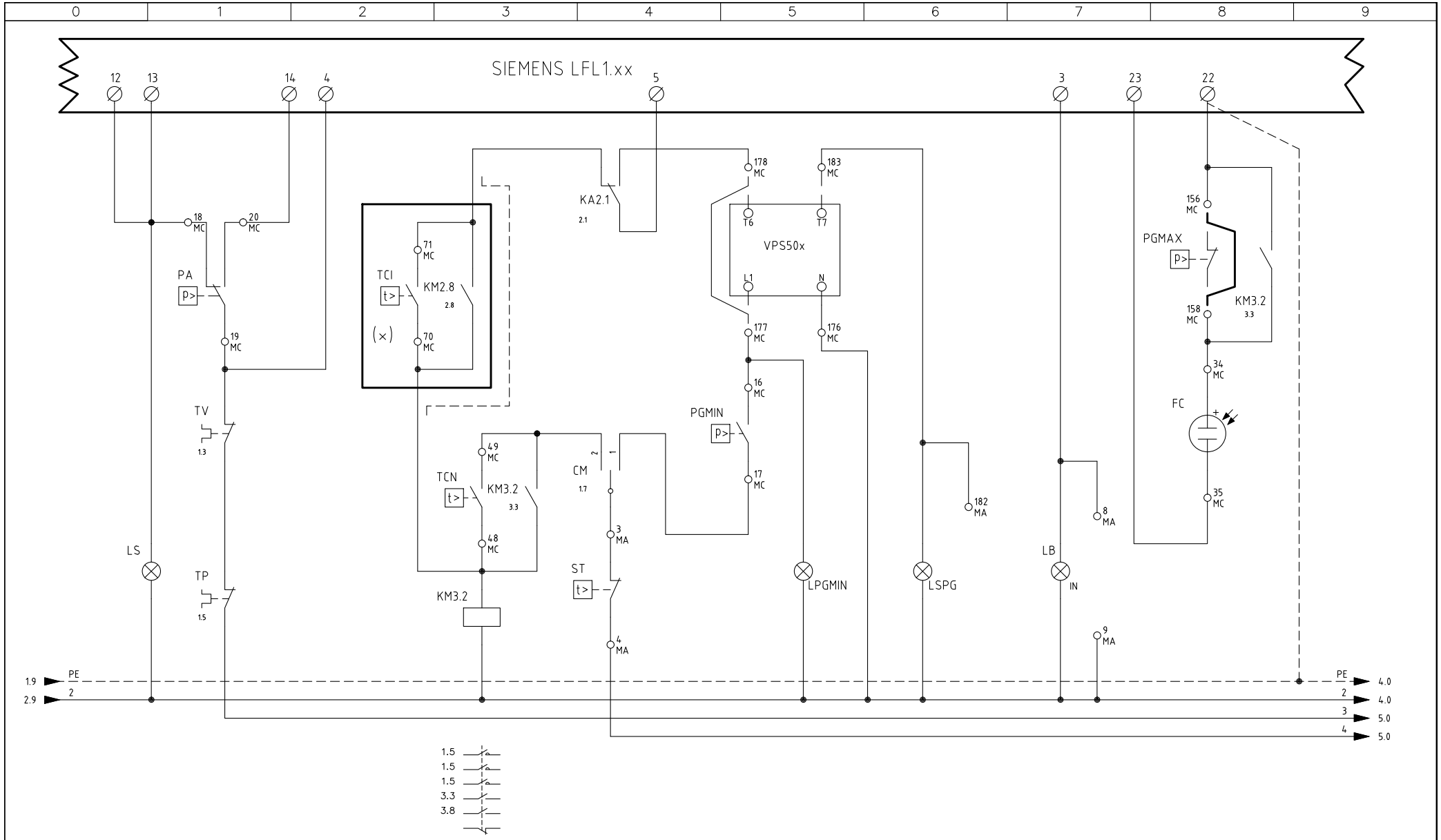

(x)
UTILIZZATO SOLO PER VERSIONI "NAFTA 400 cSt a 50 °C"
USED FOR "OIL 400 cSt a 50 °C" VERSIONS ONLY

Data 06/12/2002		PREC.	FOGLIO
Revisione **08**		2	3
Dis. N. **05 – 709**		SEGUE	TOTALE
		4	9

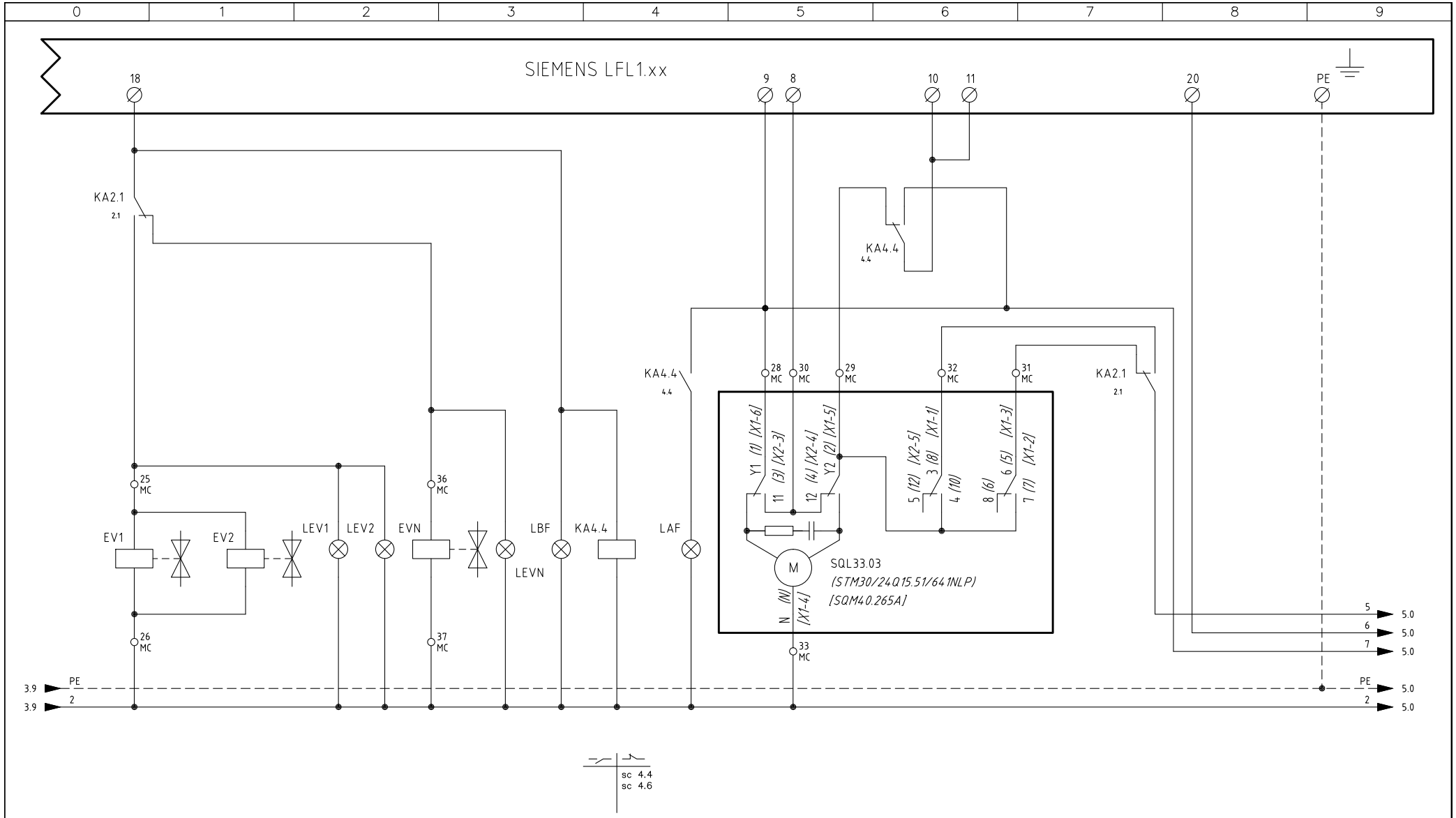

Data 06/12/2002		PREC.	FOGLIO
Revisione 08		3	4
Dis. N. 05 – 709		SEGUE	TOTALE
		5	9

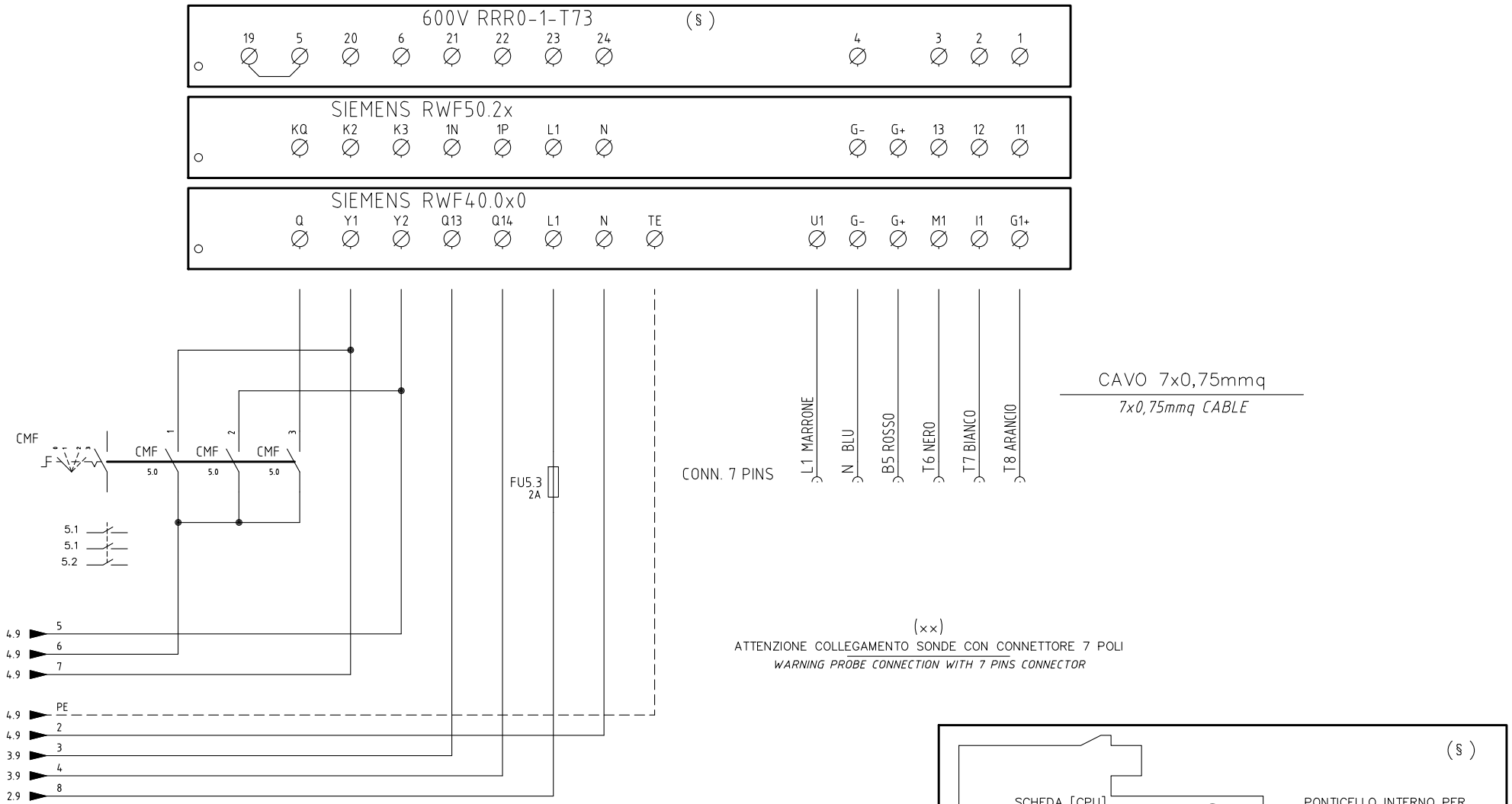

§
VERSIONE (PR) / VERSIONE (MD) CON RWF.. / 600V
(PR) VERSION / (MD) VERSION WITH RWF.. / 600V

Data 06/12/2002	PREC.	FOGLIO
Revisione 08	4	5
Dis. N. 05 – 709	SEGUE	TOTALE
	6	9

(xx)
ATTENZIONE COLLEGAMENTO SONDE CON CONNETTORE 7 POLI
WARNING PROBE CONNECTION WITH 7 PINS CONNECTOR

600V RRR0-1-T73

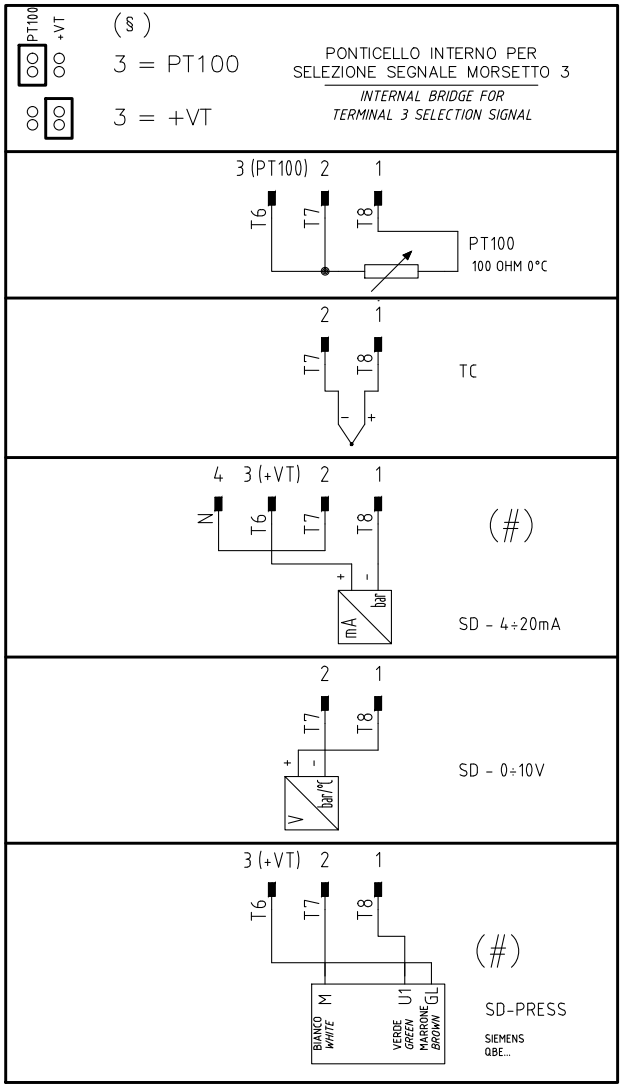

RWF40.0x0

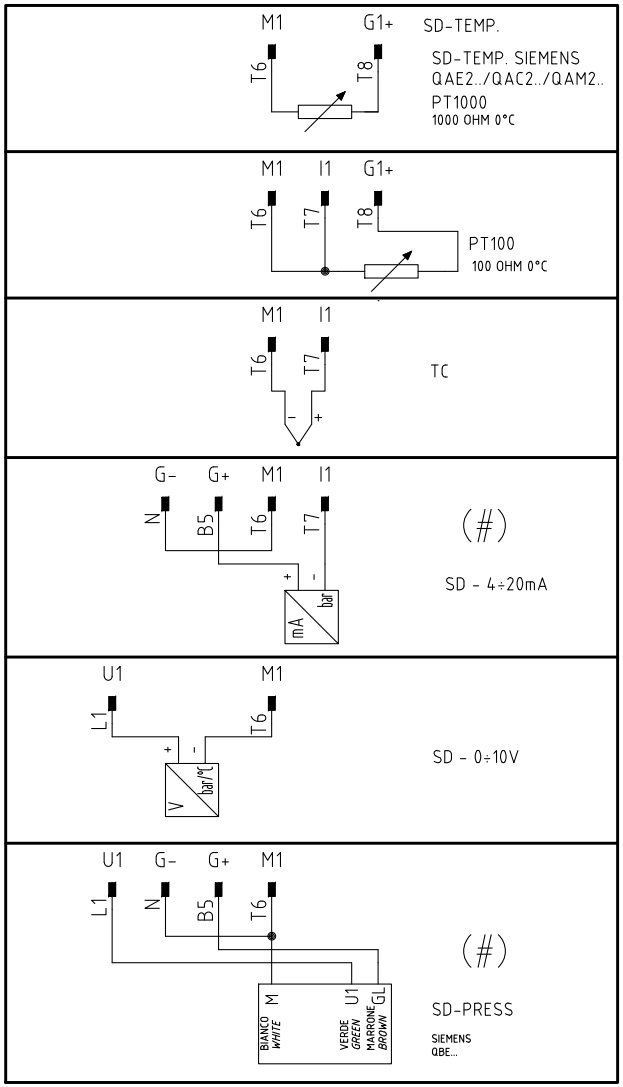

RWF50.2x

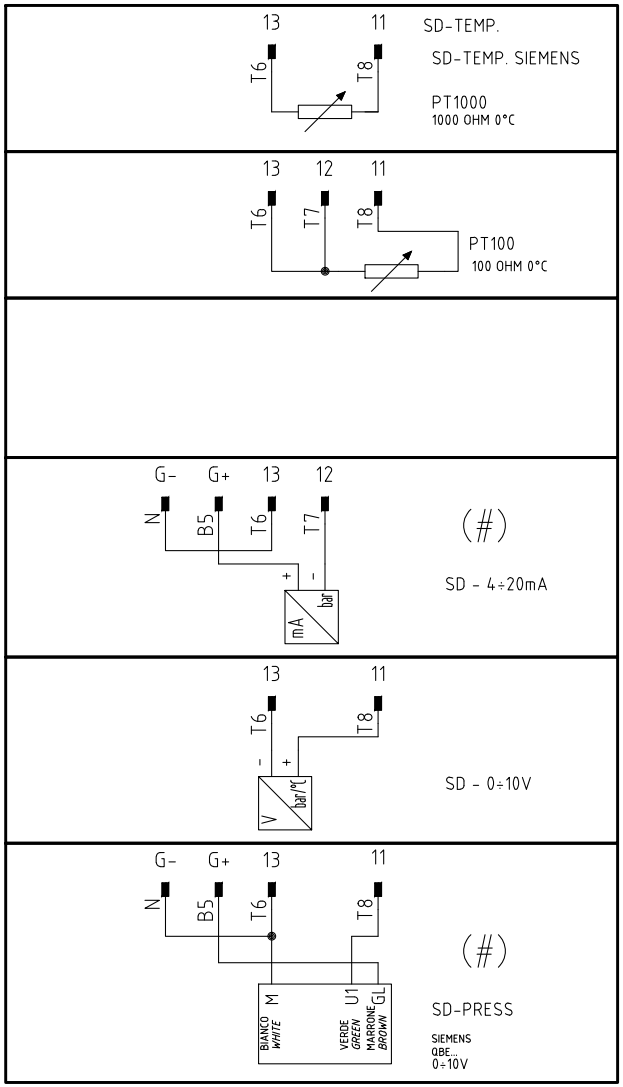

(#)
COLLEGAMENTO SOLO PER TRASDUTTORI PASSIVI
TRASDUCER PASSIVE CONNECTION ONLY

Data 06/12/2002		PREC.	FOGLIO
Revisione **08**		5	6
Dis. N. **05 – 709**		SEGUE	TOTALE
		7	9

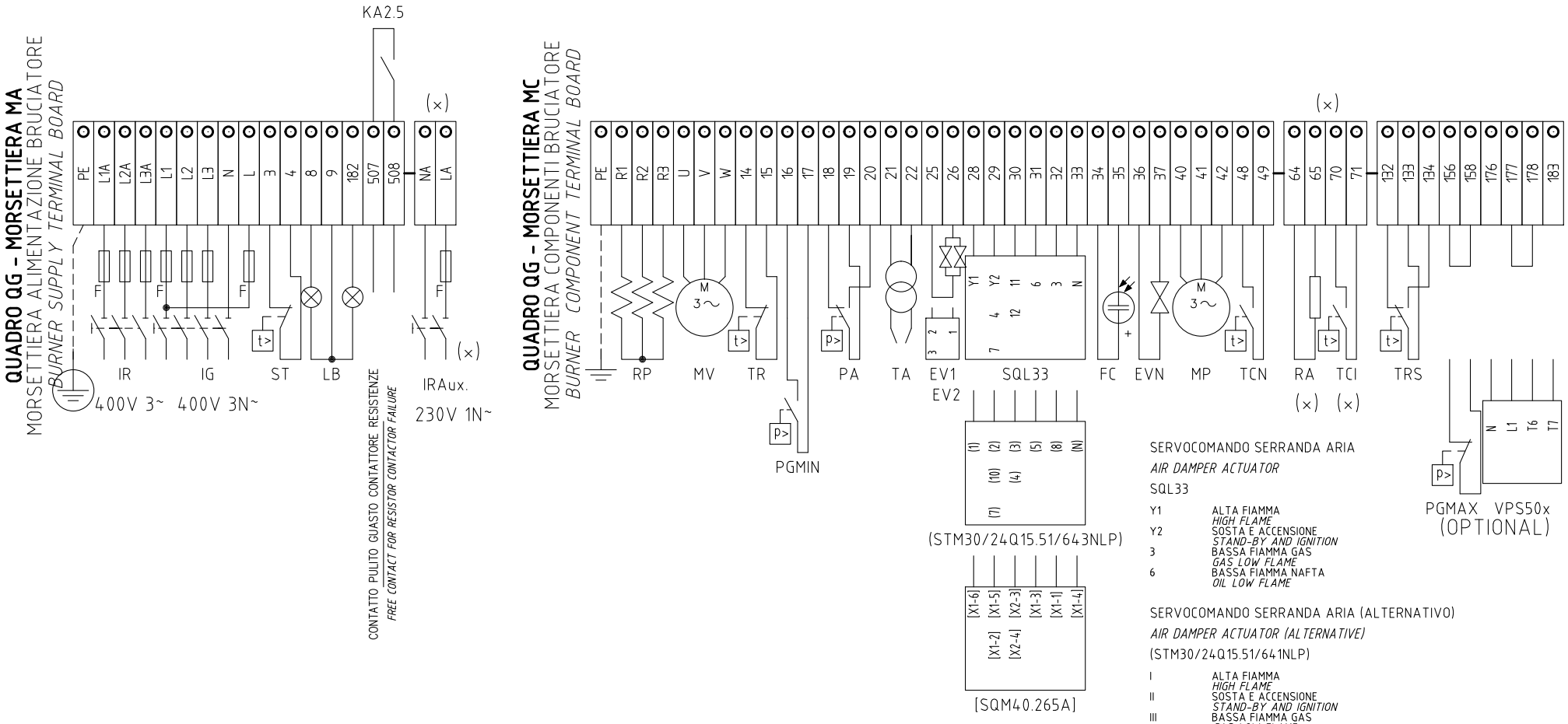

Data 06/12/2002		PREC.	FOGLIO
Revisione 08		6	7
Dis. N. 05 – 709		SEGUE	TOTALE
		8	9

	SIGLA/ITEM	FOGLIO/SHEET	FUNZIONE	FUNCTION
	600V RRR0-1-T73	5	REGOLATORE MODULANTE (ALTERNATIVO)	BURNER MODULATOR (ALTERNATIVE)
	(STM30/24Q15.51/641NLP)	4	SERVOCOMANDO SERRANDA ARIA (ALTERNATIVO)	AIR DAMPER ACTUATOR (ALTERNATIVE)
	CM	1	COMMUTATORE FUNZIONAMENTO 1)GAS 0)SPENTO 2)NAFTA	MANUAL OPERATION SWITCH 1)GAS 0)SPENTO 2)OIL
	CMF	5	COMMUT. MANUALE FUNZ. 0)FERMO 1)ALTA FIAMMA 2)BASSA FIAMMA 3)AUTOMATICO	MANUAL SWITCH 0)OFF 1)HIGH FLAME 2)LOW FLAME 3)AUTOMATIC
	EV1	4	ELETTROVALVOLA GAS LATO RETE (O GRUPPO VALVOLE)	UPSTREAM GAS SOLENOID VALVE (OR VALVES GROUP)
	EV2	4	ELETTROVALVOLA GAS LATO BRUCIATORE (O GRUPPO VALVOLE)	DOWNSTREAM GAS SOLENOID VALVE (OR VALVES GROUP)
	EVN	4	ELETTROVALVOLA NAFTA	OIL SOLENOID VALVE
	FC	3	SONDA UV RILEVAZIONE FIAMMA	UV FLAME DETECTOR
(x)	FU1.0	1	FUSIBILE LINEA RESISTENZE AUSILIARIE	LINE AUXILIARY HEATERS FUSE
(x)	FU1.1	1	FUSIBILE RESISTENZE AUSILIARIE	AUXILIARY HEATERS FUSE
	FU1.2	1	FUSIBILI DI LINEA	LINE FUSES
	FU1.3	1	FUSIBILI DI LINEA	LINE FUSES
	FU1.4	1	FUSIBILE DI LINEA	LINE FUSE
	FU1.5	1	FUSIBILI LINEA POMPA	PUMP LINE FUSES
	FU5.3	5	FUSIBILE	FUSE
	IG	1	INTERRUTTORE GENERALE	MAINS SWITCH
	IR	1	INTERRUTTORE LINEA RESISTENZE PRERISCALDATORE	PRE-HEATING RESISTOR LINE SWITCH
(x)	IRA	1	INTERRUTTORE RESISTENZE AUSILIARIE	AUXILIARY HEATERS SWITCH
(x)	IRAux.	1	INTERRUTTORE RESISTENZE AUSILIARIE	AUXILIARY HEATERS SWITCH
	KA2.1	2	RELE' AUSILIARIO	AUXILIARY RELAY
	KA2.5	2	RELE' AUSILIARIO SEGNALAZIONE GUASTO CONTATTORE RESISTENZE	AUXILIARY RELAY FOR RESISTOR CONTACTOR FAILURE
	KA4.4	4	RELE' AUSILIARIO	AUXILIARY RELAY
	KM2.6	2	CONTATTORE RESISTENZE PRERISCALDATORE [RP]	PRE-HEATING RESISTOR [RP] CONTACTOR
	KM2.8	2	CONTATTORE MOTORE VENTILATORE	FAN MOTOR CONTACTOR
	KM3.2	3	CONTATTORE MOTORE POMPA NAFTA	OIL PUMP MOTOR CONTACTOR
	LAF	4	LAMPADA SEGNALAZIONE ALTA FIAMMA BRUCIATORE	BURNER IN HIGH FLAME INDICATOR LIGHT
	LB	3	LAMPADA SEGNALAZIONE BLOCCO BRUCIATORE	INDICATOR LIGHT FOR BURNER LOCK-OUT
	LBF	4	LAMPADA SEGNALAZIONE BASSA FIAMMA BRUCIATORE	BURNER IN LOW FLAME INDICATOR LIGHT
	LEV1	4	LAMPADA SEGNALAZIONE APERTURA [EV1]	INDICATOR LIGHT FOR OPENING OF ELECTRO-VALVE [EV1]
	LEV2	4	LAMPADA SEGNALAZIONE APERTURA [EV2]	INDICATOR LIGHT FOR OPENING OF ELECTRO-VALVE [EV2]
	LEVN	4	LAMPADA SEGNALAZIONE APERTURA [EVN]	INDICATOR LIGHT FOR OPENING OF ELECTRO-VALVE [EVN]
	LPGMIN	3	LAMPADA SEGNALAZIONE PRESENZA GAS IN RETE	INDICATOR LIGHT FOR PRESENCE OF GAS IN THE NETWORK
	LRP	2	LAMPADA SEGNALAZIONE FUNZIONAMENTO PRERISCALDATORE [RP]	INDICATOR LIGHT FOR PRE-HEATING RESISTOR [RP] OPERATION
	LS	3	LAMPADA SEGNALAZIONE SOSTA BRUCIATORE	INDICATOR LIGHT FOR BURNER STAND-BY

(x)
UTILIZZATO SOLO PER VERSIONI "NAFTA 400 cSt a 50 °C"
USED FOR "OIL 400 cSt a 50 °C" VERSIONS ONLY

	SIGLA/ITEM	FOGLIO/SHEET	FUNZIONE	FUNCTION
	LSPG	3	LAMPADA SEGNALAZIONE BLOCCO CONTROLLO TENUTA VALVOLE	INDICATOR LIGHT FOR LEAKAGE OF VALVES
	LT	2	LAMPADA SEGNALAZIONE BLOCCO TERMICO MOTORE VENTILATORE	INDICATOR LIGHT FOR FAN MOTOR OVERLOAD THERMAL CUTOUT
	LTA	2	LAMPADA SEGNALAZIONE TRASFORMATORE DI ACCENSIONE	IGNITION TRANSFORMER INDICATOR LIGHT
	LTP	2	LAMPADA SEGNALAZIONE BLOCCO TERMICO MOTORE POMPA	?????????? ???????? ?????????? ????????? ??????
	LTRS	2	LAMPADA SEGNALAZIONE BLOCCO TERMOSTATO DI SICUREZZA [TRS]	INDICATOR LIGHT FOR [TRS] SAFETY THERMOSTAT
	MP	1	MOTORE POMPA NAFTA	OIL PUMP MOTOR
	MV	1	MOTORE VENTILATORE	FAN MOTOR
	PA	3	PRESSOSTATO ARIA	AIR PRESSURE SWITCH
	PGMAX	3	PRESSOSTATO GAS DI MASSIMA PRESSIONE (OPTIONAL)	MAXIMUM PRESSURE GAS SWITCH (OPTIONAL)
	PGMIN	3	PRESSOSTATO GAS DI MINIMA PRESSIONE	MINIMUM GAS PRESSURE SWITCH
	PS	2	PULSANTE SBLOCCO FIAMMA	FLAME UNLOCK BUTTON
	PT100	6	SONDA DI TEMPERATURA	TEMPERATURE PROBE
(x)	RA	1	RESISTENZE AUSILIARIE	AUXILIARY HEATERS
	RP	1	RESISTENZE PRERISCALDATORE NAFTA	PRE-HEATING TANK RESISTORS
	RWF40.0x0	5	REGOLATORE MODULANTE	BURNER MODULATOR
	RWF50.2x	5	REGOLATORE MODULANTE (ALTERNATIVO)	BURNER MODULATOR (ALTERNATIVE)
	SD-PRESS	6	SONDA DI PRESSIONE	PRESSURE PROBE
	SD-TEMP.	6	SONDA DI TEMPERATURA	TEMPERATURE PROBE
	SD - 0÷10V	6	TRASDUTTORE USCITA IN TENSIONE	TRANSDUCER VOLTAGE OUTPUT
	SD - 4÷20mA	6	TRASDUTTORE USCITA IN CORRENTE	TRANSDUCER CURRENT OUTPUT
	SIEMENS LFL 1.xx	2	APPARECCHIATURA CONTROLLO FIAMMA	CONTROL BOX
	SQL33.03	4	SERVOCOMANDO SERRANDA ARIA	AIR DAMPER ACTUATOR
	ST	3	SERIE TERMOSTATI/PRESSOSTATI	SERIES OF THERMOSTATS OR PRESSURE SWITCHES
	TA	2	TRASFORMATORE DI ACCENSIONE	IGNITION TRANSFORMER
	TC	6	TERMOCOPPIA	THERMOCOUPLE
(x)	TCI	3	TERMOSTATO CONSENSO IMPIANTO	PLANT CONSENT THERMOSTAT
	TCN	3	TERMOSTATO CONSENSO NAFTA	OIL CONSENT THERMOSTAT
	TP	1	TERMICO MOTORE POMPA	PUMP MOTOR THERMAL
	TR	2	TERMOSTATO DI REGOLAZIONE PRERISCALDATORE [RP]	REGULATION THERMOSTAT FOR PRE-HEATING [RP] RESISTORS
	TRS	2	TERMOSTATO DI SICUREZZA PRERISCALDATORE [RP]	PRE-HEATING [RP] A SAFETY THERMOSTAT
	TV	1	TERMICO MOTORE VENTILATORE	FAN MOTOR THERMAL
	VPS50x	3	CONTROLLO TENUTA VALVOLE (OPTIONAL)	GAS PROVING SYSTEM (OPTIONAL)
	[SQM40.265A]	4	SERVOCOMANDO SERRANDA ARIA (ALTERNATIVO)	AIR DAMPER ACTUATOR (ALTERNATIVE)

(x)
UTILIZZATO SOLO PER VERSIONI "NAFTA 400 cSt a 50 °C"
USED FOR "OIL 400 cSt a 50 °C" VERSIONS ONLY

Data 06/12/2002		PREC.	FOGLIO
Revisione 08		8	9
Dis. N. 05 – 709		SEGUE	TOTALE
		/	9

C.I.B. UNIGAS S.p.A.
Via L.Galvani, 9 - 35011 Campodarsego (PD) - ITALY
Tel. +39 049 9200944 - Fax +39 049 9200945/9201269
web site: www.cibunigas.it - e-mail: cibunigas@cibunigas.it

RWF55.5X & RWF55.6X

User manual

M12926CA Rel.0.2 11/2023

DEVICE INSTALLATION

Fixing system

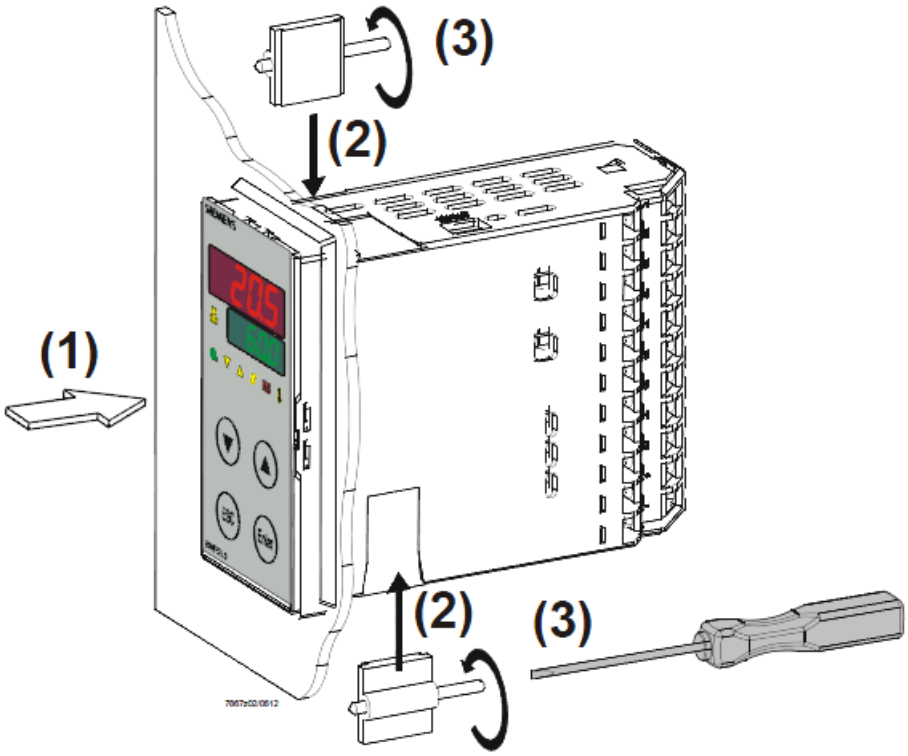

Drilling dimensions:

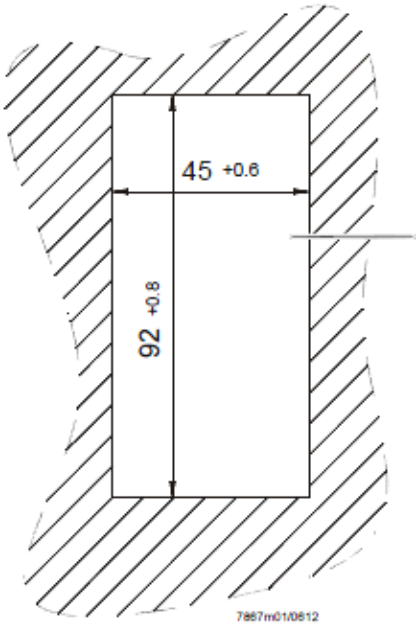

FRONT PANEL

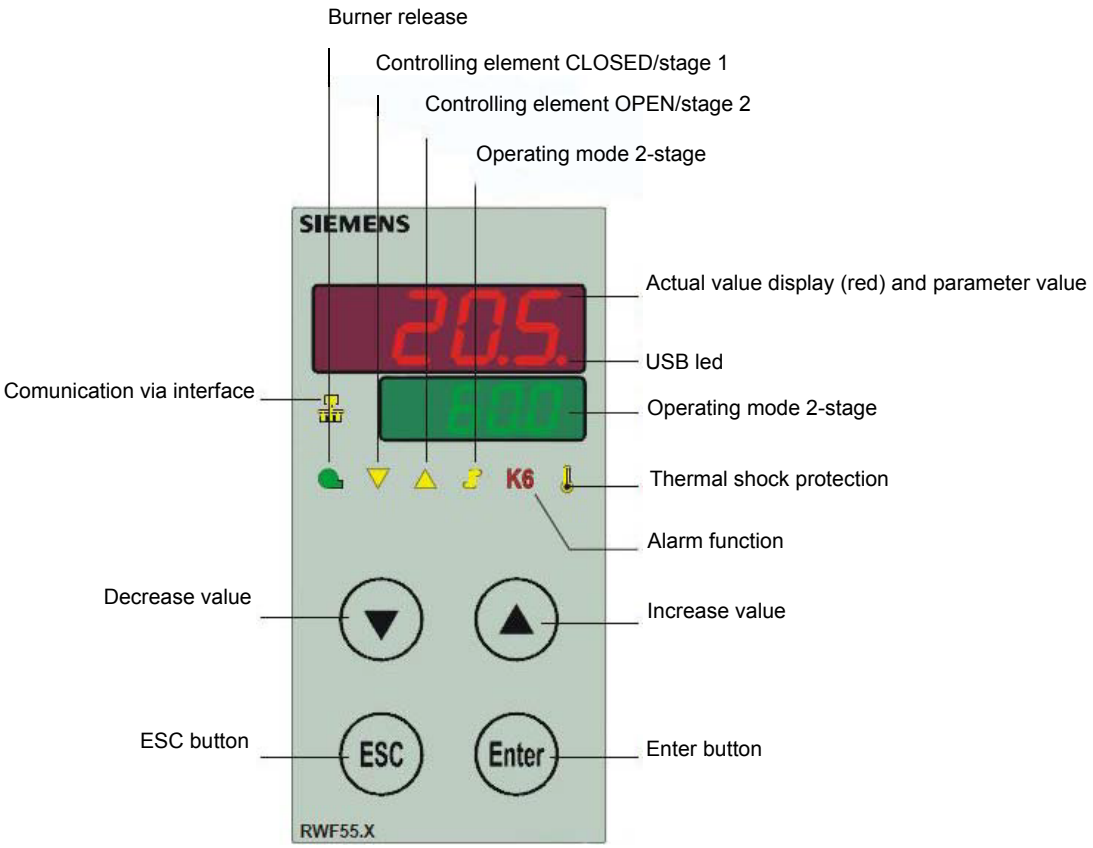
Burner release
Controlling element CLOSED/stage 1
Controlling element OPEN/stage 2
Operating mode 2-stage
SIEMENS
Actual value display (red) and parameter value
USB led
Comunication via interface
Operating mode 2-stage
K6
Thermal shock protection
Alarm function
Decrease value
Increase value
ESC button
ESC
Enter
Enter button
RWF55.X

NAVIGATION MENU

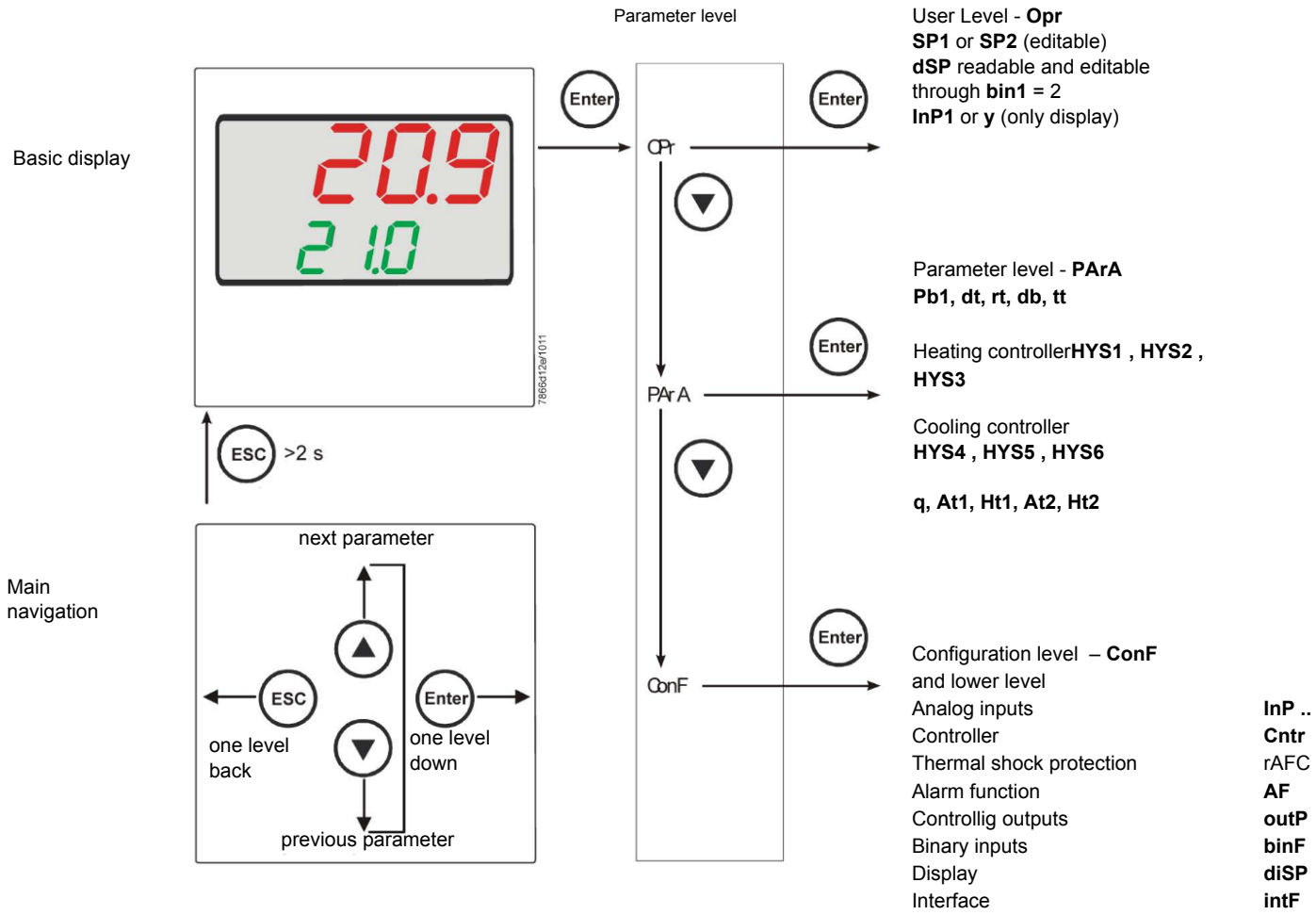

RWF55 is preset good for 90% of applications. However, you can set or edit parameters as follow:

Set-point: set or modification:

When the burner is in stand-by, (safety loop open, that is terminals 3-4/T1-T2 on the 7 pole plug open) push the Enter button: on the lower display (green) Opr appears; push Enter again and in the same display SP1 appears. Push Enter again and the lower display (green SP1) flashes. Using the up and down arrows change the set-point on the upper display (red).Push Enter to confirm and push ESC more times to get the home position.

PID parameters set and modifications (PArA):

Push **Enter** button, on the green display **Opr** appears; using the **down arrow,** scroll until group **PArA** is reached and push **Enter**.
On the green display **Pb1** e appears and on the red one the set parameter. Push is sequence the **down or up** arrow the menu is scrolled.
Push **Enter** to select and the **arrows** to choose the desired value. **Enter** to confirm

Parameter	Display	Range	Factory setting	Remarks
Proportional band	Pb1	1… 9999 digit	10	Typical value for temperature
erivative action	dt	0… 9999 sec.	80	Typical value for temperature
Integral action	rt	0… 9999 sec.	350	Typical value for temperatureT
Dead band (*)	db	0… 999,9 digit	1	Typical value
Servocontrol running time	tt	10… 3000 sec.	15	Set servocontrol running time
Switch-on differential (*)	HYS1	0,0… -1999 digit	-5	Value under setpoint below which the burner switches back on (1N-1P closes)
Switch-off differential 2° stage (*)	HYS2	0,0 … HYS3	3	(enable only with parameter bin1 = 4)
Upper switch-off differential (*)	HYS3	0,0… 9999 digit	5	Value over setpoint above which the burner switches off (1N-1P opens)
Switch-on differential on cooling controller (*)	HYS4	0,0… 9999 digit	5	Do not used (enable only with parameter **CACt** = 0)
Switch-off differential 2° stage on cooling controller (*)	HYS5	HYS6…0,0 digit	5	Do not used (enable only with parameter **CACt** = 0 and parameter **bin1**=0)
Upper switch-off differential on cooling controller (*)	HYS6	0,0… -1999 digit	5	Do not used (enable only with parameter CACt = 0)
Delay modulation	q	0,0… 999,9 digit	0	Do not alter
T Outside temperature Curve point 1 (*)	At1	-40 ...120 digit	-10	First point of external temperature for climatic curve
Boiler temperature Curve point 1 (*)	Ht1	SPL...SPH	60	Set-point temperature for the external temperature 1
TT Outside temperature Curve point 2 (*)	At2	-40 ...120 digit	20	Second point of external temperature for climatic curve
Boiler temperature Curve point 2 (*)	Ht2	SPL...SPH	50	Set-point temperature for the external temperature 2

(*) Parameters affected by setting of decimal place (**ConF > dISP** parameter **dECP**)

Setting the kind of sensor to be connected to the device:

Push the **Enter** button: on the lower display (green) **Opr** appears. Using the **up and down arrows** find **ConF.** Push **Enter** to confirm. Now on the green display the group **InP** appears. Push **Enter** and **InP1** is displaied. Enter to confirm.You are inside **InP1**; the green display shows **Sen1 (sensor type)**, while the red display shows the chosen sensor code Push **Enter** to enter the **Sen1** parameter, then choose the desired sensor using the **arrows.** Push **Enter** to confirm and **ESC** to escape.

Once selected the sensor, you can modify all the other parameters using **up and down arrows** according to the tables here below :

ConF > InP >InP1

Parameter	Value	Description
SEn1 type of sensor for analog input 1	1	Pt100 3 wire
	2	Pt100 2 wire
	3	Pt1000 3 wire
	4	Pt1000 2 wire
	5	Ni1000 3 wire
	6	Ni1000 2 wire
	7	0 ÷ 135 ohm
	8	Cu-CuNi T
	9	Fe-CuNi J
	10	NiCr-Ni K
	11	NiCrSi-NiSi N
	12	Pt10Rh-Pt S
	13	Pt13Rh-Pt R
	14	Pt30Rh-Pt6Rh B
	15	0 ÷ 20mA
	16	4 ÷ 20mA
	17	0 ÷ 10V
	18	0 ÷ 5V
	19	1 ÷ 5V
OFF1 Sensor offset	-1999..**0**.. +9999	Correction value measured by the sensor
SCL1 scale low level	-1999..**0**.. +9999	minimum scale value(for input ohm, mA, V)
SCH1 scale high level	-1999..**100**.. +9999	maximum scale value(for input ohm, mA, V)
dF1 digital filter	0…**0,6**…100	Is used to adapt the digital 2nd order input filter (time in s; 0 s = filter off)
Unit temperature unit	**1** 2	1 = **degrees** Celsius 2 = degrees Fahrenheit

(**bold** = factory settings)

ConF > InP >InP2

Input 2 : this input can be used to specify an external setpoint or carry out setpoint shifting

Parameter	Value	Description
FnC2	0 1 2 3	0= **no function** 1= external setpoint (display **SPE**) 2 =setpoint shifting (display **dSP**) 3 = angular positioning feedback
SEn2 tisensor type input 2	1	0 ÷ 20mA
	2	4 ÷ 20mA
	3	0 ÷ 10V
	4	0 ÷ 5V
	5	1 ÷ 5V
	1	0 ÷ 20mA
OFF2 Sensor offset	-1999..**0**.. +9999	Correction value measured by the sensor
SCL2 scale low level	-1999..**0**.. +9999	minimum scale value(for input ohm, mA, V)
SCH2 scale high level	-1999..**100**.. +9999	maximum scale value(for input ohm, mA, V)
dF2 digital filter	0…**2**…100	Is used to adapt the digital 2nd order input filter (time in s; 0 s = filter off)

(**bold** = factory settings)

ConF > InP >InP3

Input 3: this input is used to acquire the outside temperature

Parameter	Value	Description
SEn3 sensor type input 3sensor type input 2	0	0 =
	1	1 = wire
	2	2 = wire
OFF3 Sensor offset	-1999..**0**.. +9999	Correction value measured by the sensor
dF3 digital filter	0…**1278**…1500	Is used to adapt the digital 2nd order input filter (time in s; 0 s = filter off)

(**bold** = factory settings)

ConF > Cntr

Here, the type of controller, operating action, setpoint limits and presettings for self-optimization are selected

Parameter	Value	Description
CtYP controller type	1 2	**1 = 3-position controller (open-stop-close)** 2 = continuative action controller (0 ÷10V or 4 ÷ 20mA)
CACt control action	**1** 0	1 = **heating controller** 0 = cooling controller
SPL least value of the set-point range	-1999..**0**..+9999	minimum set-point scale
SPH maximum value of the set-point range	-1999..**100**..+999	maximum set-point scale
Self-optimization	0 1	0 = **Free** 1 = Locked Self-optimization can only be disabled or enabled via the ACS411 setup program. Self-optimization is also disabled when the parameter level is locked
oLLo set-point limitation start, operation limit low	**-1999**.... +9999	lower working range limit
oLHi set-point limitation end, operation limit high	-1999.... **+9999**	upper working range limit

(**bold** = factory settings)

ConF > rAFC

Activation boiler shock termic protetion:

RWF55.. can activate the thermal shock protection only on sites where the set-point is lower than 250°C and according to **rAL** parameter

Parameter	Value	Description
FnCT type of contol	**0** 1 2	tchoose type of range degrees/time **0 = deactived** 1 = Kelvin degrees/minute 2 = Kelvin degrees/hour
rASL ramp rate	**0,0 …** 999,9	Slope of thermal shock protection (only with functions 1 and 2) .
toLP tolerance band ramp	**2 x (HYS1) = 10**…9999	width of tolerance band (in K) about the set-point **0 = tolerance band inactive** 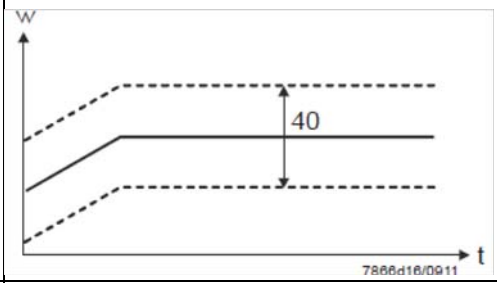
rAL ramp limit	**0**…250	Ramp limit. When this value is lower than the temperature set-point, the RWF controls the output increasing the temp set point step by step according to **rASL**. If this is over the temp set point, the control is performed in cooling

(**bold** = factory settings)

Alarm functionAF

The alarm function can be used to monitor the analog inputs. If the limit value is exceeded, multifunctional relay K6 (terminals **6N** and **6P**) is activated (depending on the switching characteristic)

The alarm function can have different switching functions (Ik1 to Ik8) and can be set to a deviation from the active setpoint or to a fixed limit value

Limit value **AL** relative to setpoint (x)

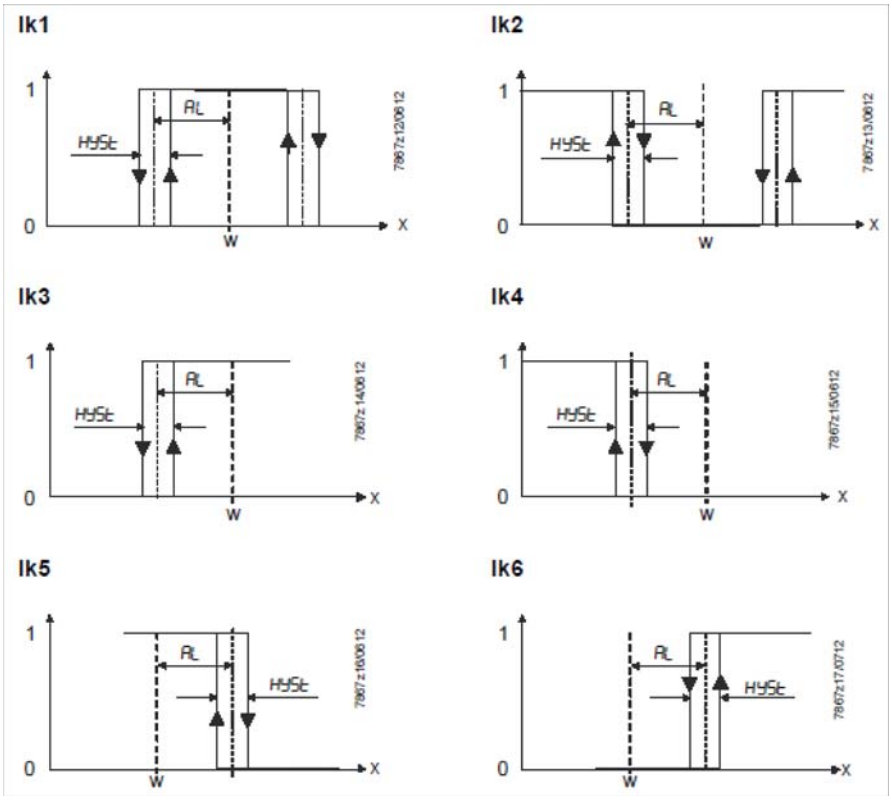

Fixed limit value **AL**

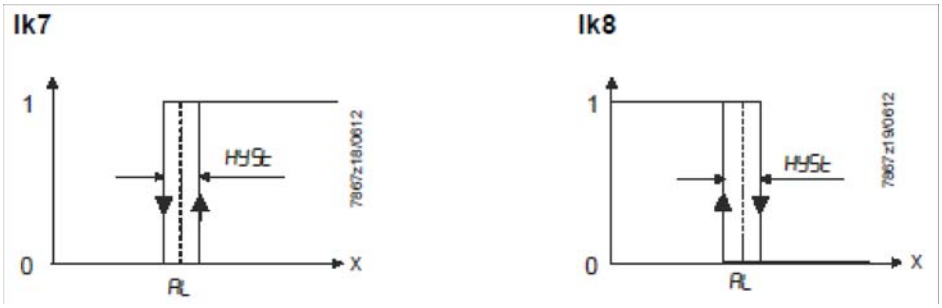

ConF > AF

Parameter	Value	Description
FnCt type of control	0 1 2 3 4 5 6 7 8 9 10 11 12	0 = **Without function** Ik1 = monitored input **InP1** Ik2 = monitored input **InP1** Ik3 = monitored input **InP1** Ik4 = monitored input **InP1** Ik5 = monitored input **InP1** Ik6 = monitored input **InP1** Ik7 = monitored input **InP1** Ik8 = monitored input **InP1** Ik7 = monitored input **InP2** Ik8 = monitored input **InP2** Ik7 = monitored input **InP3** Ik8 = monitored input **InP3**
Alarm value AL	-1999 ... **0** 1999	Limit value or deviation from setpoint to be monitored (see alarm functions **Ik1** to **Ik8**: limit value **AL**) Limit value range for **Ik1** and **Ik2**0 ...9999
HySt switching differential	0… **1**... 9999	Switching differential for limit value **AL**
ACrA response by out of range	**0** 1	**Switched-off** ON Switching state in the case of measuring range overshoot or undershoot (Out of Range)

(**bold** = factory settings)

ConF > OutP

For fuel-air ratio control purposes, the RWF55 has the binary outputs K2, K3 (terminals KQ,K2, K3) and the analog output (terminals A+, A-). The burner is released via relay K1 (terminals 1N, 1P) .

The binary outputs of the RWF55 offer no setting choices

The RWF55 has an analog output.

The analog output offers the following setting choices:

Parameter	Value	Description
FnCt type of control	1 2 3 **4**	1 = analog input 1 doubling with possibility to convert 2 = analog input 2 doubling with possibility to convert 3 = analog input 3 doubling with possibility to convert **4 = Controller's angular positioning is delivered (modulating controller)**
SiGn type of output signal	 **0** 1 2	physical output signal (terminals A+, A-) **0 = 0÷20mA** 1 = 4÷20mA 2 = 0÷10V DC
rOut value when out of input range	**0**…101	signal (in percent) when measurement range is crossed
oPnt zero point	-1999…**0**..+9999	A value range of the output variable is assigned to a physical output signal (for **FnCt** = 1, 2, 3)
End end point	-1999…**100**..+9999	A value range of the output variable is assigned to a physical output signal (for **FnCt** = 1, 2, 3)

(**bold** = factory settings)

ConF > binF

This setting decides on the use of the binary inputs**D1**, **D2**, **DG**

b

Parameter	Value	Description
bin1 binary imput 1 (terminals **DG – D1**)	**0** 1 2 3	**0 = without function** 1 = set-point changeover (SP1 / SP2) 2 = Iset-point shift (Opr > dSP parameter = value of set-point modify) 3 = input alarm
bin2 binary imput 2 (terminalsк **DG – D2**)	**4**	**changeover of operating mode** DG-D2 open = modulating operation DG-D2 close = 2 stage operation

(**bold** = factory settings)

ConF > dISP

.Both displays can be customized to suit your needs by configuring the displayed value, decimal, time out and blocking

Parameter	Value	Description
diSU pper display (red)	0 **1** 2 3 4 6 7	Display value for upper display: 0 = display power-off **1 = analog input 1 (InP1) value** 2 = analog input 2 (InP2) value 3 = analog input 3 (InP3) value 4 = controller's angular positioning 6 = set-point valueв 7 = end value with thermal shock protection
diSL lower display (green)	0 1 2 3 4 **6** 7	Display value for lower display3: 0 = display power-off 1 = analog input 2 (InP2) value 2 = analog input 2 (InP2) value 3 = analog input 2 (InP2) value 4 = controller's angular positioning **6 =** set-point valueв 7 = end value with thermal shock protection
tout timeout	0..**180**..250	time (s) on completion of which the controller returns automatically to the basic display, if no button is pressed
dECP decimal point	**0** 1 2	**0 = no decimal place** 1 = one decimal place 2 = two decimal place
CodE level lockout	**0** 1 2 3	**0 = no lockout** 1 = configuration level lockout (**ConF**) 2 = parameter and configuration level lockout (**PArA** & **ConF**) 3 = keyboard lockout

(**bold** = factory settings)

ConF > IntF

The controller can be integrated into a data network using an optional RS-485 (terminals R+ and R-) interface or an optional Profibus DP interface(only model**RWF55.6x** terminalsC1-C2-C3-C4)

Parameter	Value	Description
bdrt baudrate	**0** 1 2 3	**0 = 4800 baud** 1 = 9600 baud 2 = 19200 baud 3 = 38400 baud
Adr Device address Modbus	0.. **1**.. 254	Address in the data network
dP Device address Profibus	0..**125**	only withRWF55.6x
dtt Remote detection time	0.. **30**.. 7200s	0 = swiched-off

(**bold** = factory settings)

Manual control :

In order to manual change the burner load, while firing keep pushing the **ESC** button for more than 5 s; on the lower green display **Hand** appears.

using the **UP** and **DOWN** arrows, the load varies.

Keep pushing the **ESC** button for getting the normal operation again.

NB: every time the device shuts the burner down (start led switched off - contact 1N-1P open), the manual control is not active.

Device self-setting (auto-tuning):

If the burner in the steady state does not respond properly to heat generator requests, you can activate the Device's self-setting function, which recalculates PID values for its operation, deciding which are most suitable for the specific kind of request

Follow the below instructions:

push the **UP** and **DOWN** arrows for more than 5 s; on the green lower display **tUnE** appears. Now the device pushes the burner to increase and decrease its output. During this time, the device calculates **PID** parameters (**Pb1**, **dt** and **rt**). After the calculations, the **tUnE** is automatically deactivated and the device has already stored them.

In order to stop the Auto-tuning function while it works, push again the **UP** and **DOWN** arrows for more than 5 s. The calculated **PID** parameters can be manually modified following the previously described instructions.

Display of software version :

The software version is shown by pushing Enter + UP arrow on the upper display.

Weather-compensated setpoint shifting(climatic regulation):

The RWF55 can be configured so that weather-compensated setpoint shifting is activated when an LG-Ni1000 outside sensor or a Pt1000 is connected (see parameter **InP3**).

To take into account the time response of a building, weather-compensated setpoint shifting uses the attenuated outside temperature rather than the current outside temperature

The minimum and maximum setpoints can be set using the lower setpoint limit **SPL** and the upper setpoint limit **SPH** of the menù **Crtr**.

The system also prevents the lower working range limit **oLLo** and upper working range limit **oLHi** from exceeding/dropping below the system temperature limits.

The heating curve describes the relationship between the boiler temperature setpoint and the outside temperature. It is defined by 2 curve points. For 2 outside temperatures, the user defines the boiler temperature setpoint that is required in each case. The heating curve for the weather-compensated setpoint is calculated on this basis. The effective boiler temperature setpoint is limited by the upper setpoint limit **SPH** and the lower setpoint limit **SPL**.

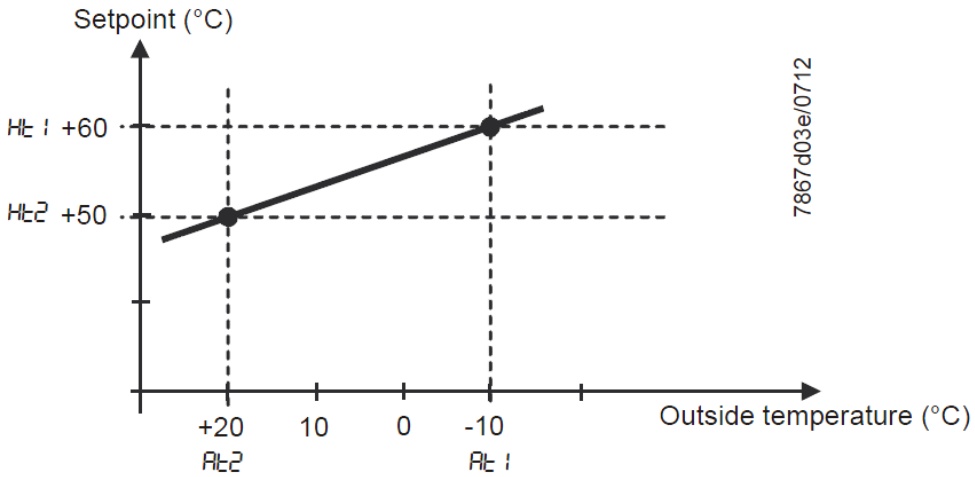

For setting climatic regulation function set:

PArA > parameters**At1, Ht1, At2, Ht2**

ConF > InP > InP3 parameters**SEn3, FnC3 = 1** (Weather-compensated setpoint).

Modbus interface

The tables that follow in this chapter specify the addresses of the readable and writable words that the customer is able to access. The customer may read and/or write the values using SCADA programs, PLCs, or similar.

The entries under Access have the following meanings:

R/O Read Only, value can only be read

R/W Read/Write, value can be read and written

The number of characters specified under Data type in the case of character strings includes the final \0.

Char10 means that the text is up to 9 characters long. The final \0 character is then added to this

User level

Address	**Access**	**Data type**	Signal reference	Parameter
0x0000	R/O	Float	X1	Analog input InP1
0x0002	R/O	Float	X2	Analog input InP2
0x0004	R/O	Float	X3	Analog input InP2
0x0006	R/O	Float	WR	Actual setpoint
0x0008	R/W	Float	SP1	Setpoint 1
0x000A	R/W	Float	SP2 (= dSP)	Setpoint 2
0x1035	R/O	Float	---	Analog input InP3 (unfiltered)
0x1043	R/O	Float	---	Actual angular positioning
0x1058	R/O	Word	B1	Burner alarm

Parameter level

Address	**Access**	**Data type**	Signal reference	Parameter
0x3000	R/W	Float	Pb1	Proportional range 1
0x3004	R/W	Float	dt	Derivative action time
0x3006	R/W	Float	rt	Integral action time
0x300C	R/W	Float	db	Dead band
0x3012	R/W	Word	tt	Controlling element running time
0x3016	R/W	Float	HYS1	Switch-on threshold
0x3018	R/W	Float	HYS2	Switch-off threshold down
0x301A	R/W	Float	HYS3	Switch-off threshold up
0x301C	R/W	Float	HYS4	Switch-on threshold (cooling)
0x301E	R/W	Float	HYS5	Switch-off threshold down (cooling)
0x3020	R/W	Float	HYS6	Switch-off threshold up (cooling)
0x3022	R/W	Float	**q**	Reaction threshold
0x3080	R/W	Float	At1	Outside temperature 1
0x3082	R/W	Float	Ht2	Boiler temperature 1
0x3084	R/W	Float	At2	Outside temperature 2
0x3086	R/W	Float	Ht2	Boiler temperature 2

Configuration level

Address	Access	Data type	Signal reference	Parameter
0x3426	R/W	Float	SCL1	Start of display input 1
0x3428	R/W	Float	SCH1	End of display input 1
0x3432	R/W	Float	SCL2	Start value input 2
0x3434	R/W	Float	SCH2	End value input 2
0x3486	R/W	Float	SPL	Start of setpoint limitation
0x3488	R/W	Float	SPH	End of setpoint limitation
0x342A	R/W	Float	OFFS1	Offset input E1
0x3436	R/W	Float	OFFS2	Offset input E2
0x343A	R/W	Float	OFFS3	Offset input E3
0x1063	R/W	Word	FnCt	Ramp function
0x1065	R/W	Float	rASL	Ramp slope
0x1067	R/W	Float	toLP	Tolerance band ramp
0x1069	R/W	Float	rAL	Limit value
0x1075	R/W	Float	dtt	Remote Detection Timer
0x1077	R/W	Float	dF1	Filter constant input 1
0x1079	R/W	Float	dF2	Filter constant input 2
0x107B	R/W	Float	dF3	Filter constant input 3
0x107D	R/O	Float	oLLo	Lower working range limit
0x107F	R/O	Float	oLHi	Upper working range limit
0x106D	R/W	Word	FnCt	Alarm relay function
0x106F	R/W	Float	AL	Alarm relay limit value (limit value alarm)
0x1071	R/W	Float	HYSt	Alarm relay hysteresis

Remote operation

Address	Access	Data type	Signal reference	Parameter
0x0500	R/W	Word	REM	Activation remote operation *
0x0501	R/W	Word	rOFF	Controller OFF in remote setpoint **
0x0502	R/W	Float	rHYS1	Switch-on threshold remote
0x0504	R/W	Float	rHYS2	Switch-off threshold down remote
0x0506	R/W	Float	rHYS3	Switch-off threshold up remote
0x0508	R/W	Float	SPr	Setpoint remote
0x050A	R/W	Word	RK1	Burner release remote operation
0x050B	R/W	Word	RK2	Relay K2 remote operation
0x050C	R/W	Word	RK3	Relay K3 remote operation
0x050D	R/W	Word	RK6	Relay K6 remote operation
0x050E	R/W	Word	rStEP	Step-by-step control remote operation
0x050F	R/W	Float	rY	Angular positioning output remote operation
0x0511	R/W	Float	rHYS4	Switch-on threshold remote (cooling)
0x0513	R/W	Float	rHYS5	Switch-off threshold down remote (cooling)
0x0515	R/W	Float	rHYS6	Switch-off threshold up remote (cooling)

Legend
* = Local
** = Controller OFF

Dati dell'apparecchio

Address	Access	Data type	Signal reference	Parameter
0x8000	R/O	Char12	---	Software version
0x8006	R/O	Char14	---	VdN number

Stato dell'apparecchio

Address	Access	Data type	Signal reference	Parameter
0x0200	R/O	Word	---	Outputs and states
			Bit 0	Output 1
			Bit 1	Output 3
			Bit 2	Output 2
			Bit 3	Output 4
			Bit 8	Hysteresis limitation
			Bit 9	Control system
			Bit 10	Self-optimization
			Bit 11	Second setpoint
			Bit 12	Measuring range overshoot InP1
			Bit 13	Measuring range overshoot InP2
			Bit 14	Measuring range overshoot InP3
			Bit 15	Calibration mode
0x0201	R/O	Word	---	Binary signals and hardware detection
			Bit 0	Operation mode 2-stage
			Bit 1	Manual mode
			Bit 2	Binary input D1
			Bit 3	Binary input D2
			Bit 4	Thermostat function
			Bit 5	First controller output
			Bit 6	Second controller output
			Bit 7	Alarm relay
			Bit 13	Analog output available
			Bit 14	Interface available

Electric connections :

With 7 pins connector version

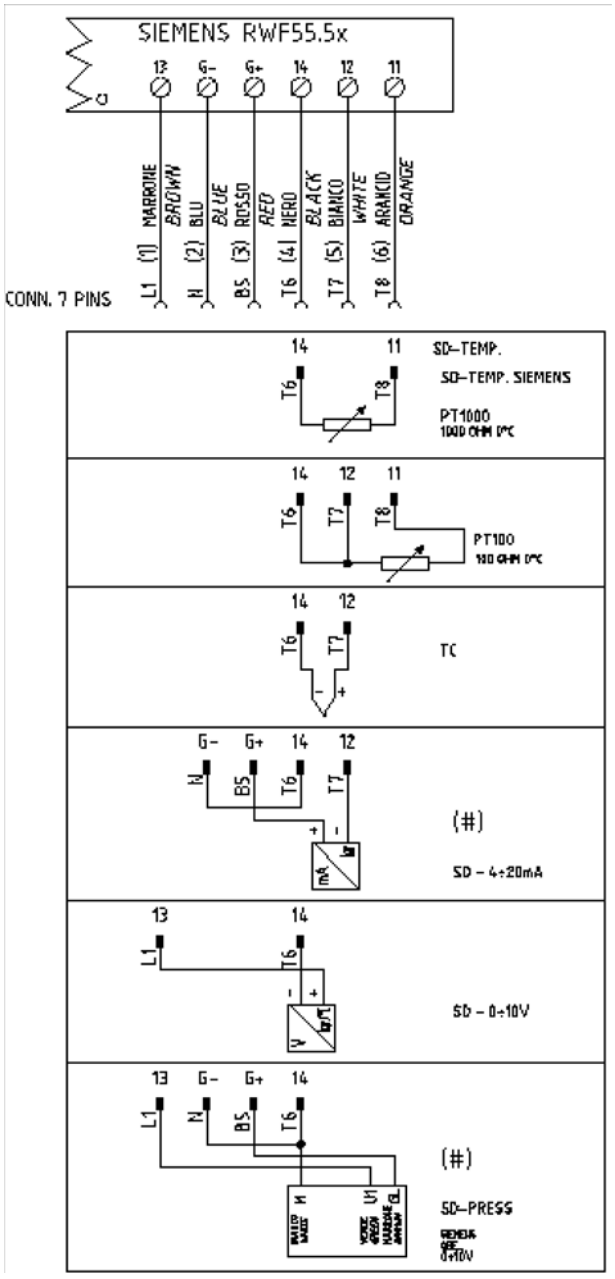

With terminals version

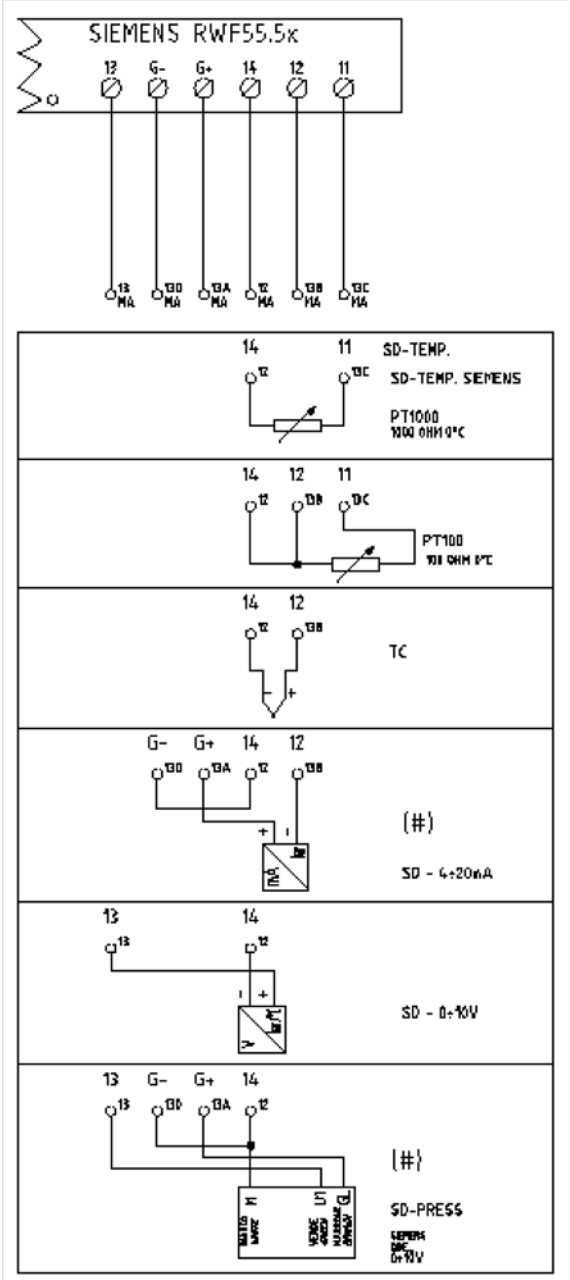

Corrispondences bornes entre RWF55.5x y RWF40.0x0Matches terminals betweenRWF55.5x and RWF40.0x0

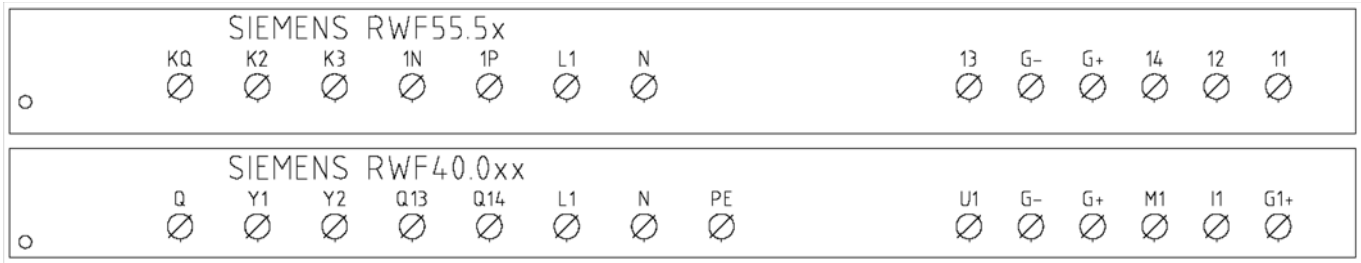

Parameters summarising for RWF55.xx :

Navigation menù	ConF					ConF									
	Inp														
	Inp1					Cntr		diSP	PArA						Opr
Types of probe	SEn1	OFF1	SCL	SCH	Unit	SPL	SPH	dECP	Pb. 1	dt	rt	tt	HYS1 (*)	HYS3 (*)	SP1 (*)
Siemens QAE2120…	6	0	needless	needless	1	30	95	1	10	80	350	(#)	-5	5	80 °C
Siemens QAM2120..	6	0	needless	needless	1	0	80	1	10	80	350	(#)	-2,5	2,5	40°C
Pt1000 (130°C max.)	4	0	needless	needless	1	30	95	1	10	80	350	(#)	-5	5	80°C
Pt1000 (350°C max.)	4	0	needless	needless	1	0	350	1	10	80	350	(#)	-5	10	80°C
Pt100 (130°C max.)	1	0	needless	needless	1	0	95	1	10	80	350	(#)	-5	5	80°C
Pt100 (350°C max)	1	0	needless	needless	1	0	350	1	10	80	350	(#)	-5	10	80°C
Probe4÷20mA / 0÷1,6bar	16	0	0	160	needless	0	160	0	5	20	80	(#)	0	20	100 kPa
Probe4÷20mA / 0÷3bar	16	0	0	300	needless	0	300	0	5	20	80	(#)	0	20	200 kPa
Probe 4÷20mA / 0÷10bar	16	0	0	1000	needless	0	1000	0	5	20	80	(#)	0	50	600 kPa
Probe 4÷20mA / 0÷16bar	16	0	0	1600	needless	0	1600	0	5	20	80	(#)	0	80	600 kPa
Probe 4÷20mA / 0÷25bar	16	0	0	2500	needless	0	2500	0	5	20	80	(#)	0	125	600 kPa
Probe 4÷20mA / 0÷40bar	16	0	0	4000	needless	0	4000	0	5	20	80	(#)	0	200	600 kPa
Probe 4÷20mA / 0÷60PSI	16	0	0	600	needless	0	600	0	5	20	80	(#)	0	30	300 (30PSI)
Probe4÷20mA / 0÷200PSI	16	0	0	2000	needless	0	2000	0	5	20	80	(#)	0	75	600 (60PSI)
Probe4÷20mA / 0÷300PSI	16	0	0	3000	needless	0	3000	0	5	20	80	(#)	0	120	600 (60PSI)
Siemens QBE2002 P4	17	0	0	400	needless	0	400	0	5	20	80	(#)	0	20	200 kPa
Siemens QBE2002 P10	17	0	0	1000	needless	0	1000	0	5	20	80	(#)	0	50	600 kPa
Siemens QBE2002 P16	17	0	0	1600	needless	0	1600	0	5	20	80	(#)	0	80	600 kPa
Siemens QBE2002 P25	17	0	0	2500	needless	0	2500	0	5	20	80	(#)	0	125	600 kPa
Siemens QBE2002 P40	17	0	0	4000	needless	0	4000	0	5	20	80	(#)	0	200	600 kPa
Signal 0÷10V	17	0	needless	needless	needless	needless	needless	needless	5	20	80	(#)			
Signal 4÷20mA	16	0	needless	needless	needless	needless	needless	needless	5	20	80	(#)			

NOTE:
(#) tt – servo control run time
SQL33 ; STM30; SQM10; SQM40; SQM50; SQM54 = 30 (secondi) - STA12B3.41; SQN30.251; SQN72.4A4A20 = 12 (secondi)
(*)These values are factory set - values must be set during operation at the plant based on the real working temperature/pressure value.

WARNING :
With pressure probes in bar the parameters SP1, SCH, SCL, HYS1, HYS3 must be set and displayed in kPa (kilo Pascal); 1bar = 100,000Pa = 100kPa.
With pressure probes in PSI the parameters SP1, SCH, SCL, HYS1, HYS3 must be set and displayed in PSI x10 (example: 150PSI > I display 1500).

APPENDIX: PROBES CONNECTION

To assure the utmost comfort, the control system needs reliable information, which can be obtained provided the sensors have been installed correctly. Sensors measure and transmit all variations encountered at their location.

Measurement is taken based on design features (time constant) and according to specific operating conditions.With wiring run in raceways, the sheath (or pipe) containing the wires must be plugged at the sensor's terminal board so that currents of air cannot affect the sensor's measurements.

Ambient probes (or ambient thermostats)

Installation

The sensors (or room thermostats) must be located in reference rooms in a position where they can take real temperature measurements without being affected by foreign factors.

It's good to be admired …even better to be effective

Heating systems: the room sensor must not be installed in rooms with heating units complete with thermostatic valves. Avoid all sources of heat foreign to the system.

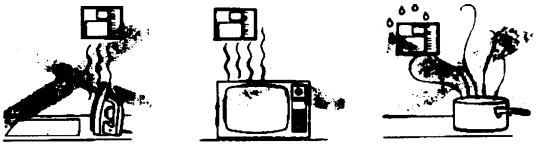

Location

On an inner wall on the other side of the room to heating unitsheight above floor 1.5 m, at least 1.5 m away from external sources of heat (or cold).

.

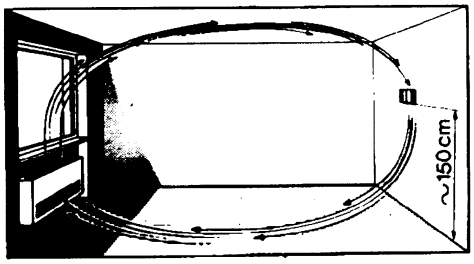

Installation position to be avoided

near shelving or alcoves and recesses, near doors or win-dows, inside outer walls exposed to solar radiation or currents of cold air, on inner walls with heating system pipes, domestic hot water pipes, or cooling system pipes running through them.

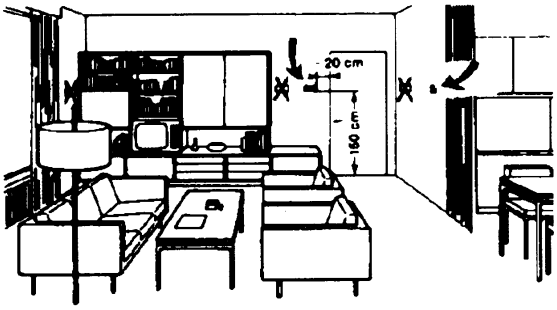

Outside probes (weather)Installation

In heating or air-conditioning systems featuring adjustment in response to outside temperature, the sensor's positioning is of paramount importance.

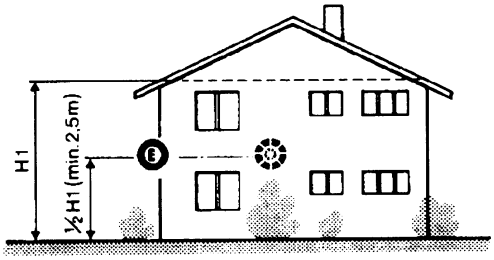

General rule: en on the outer wall of the building where the living rooms are, never on the south-facing wall or in a position where they will be affected by morning sun. If in any doubt, place them on the north or north-east façade.

Positions to be avoidedH

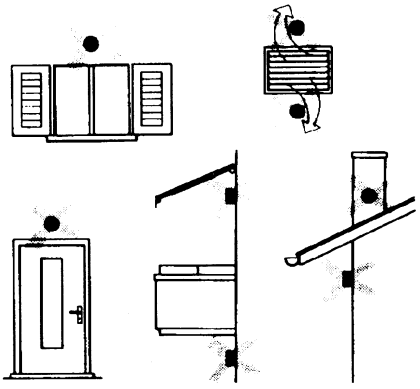

Avoid installing near windows, vents, outside the boiler room, on chimney breasts or where they are protected by balconies, cantilever roofs .

The sensor must not be painted (measurement error) .

Duct or pipe sensors

Installing temperature sensors

For measuring outlet air:

"after delivery fan or

"after coil to be controlled, at a distance of at least 0,5 m

For measuring room temperature:

"before return air intake fan and near room's return airintake.

For measuring saturation temperature: after mist eliminator.

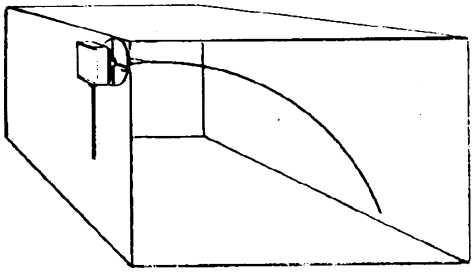

Bend 0.4m sensor by hand (never use tools) as illustrated .

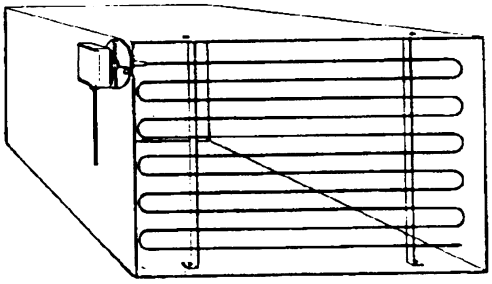

Use whole cross-section of duct, min. distance from walls 50 mm, radius of curvature 10 mm for 2m or 6m sensors

Installing combined humidity sensors

As max. humidity limit sensor on outlet (steam humidifiers) .

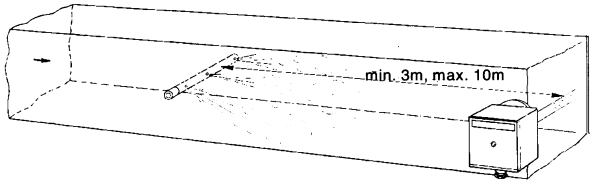

Installing pressure sensors

A - installation on ducts carrying fluids at max. temperature 80°C

B - installation on ducts at temperature over 80°C and for refrigerants

C - installation on ducts at high temperatures :

·"increase length of siphon

"place sensor at side to prevent it being hit by hot air coming from the pipe.

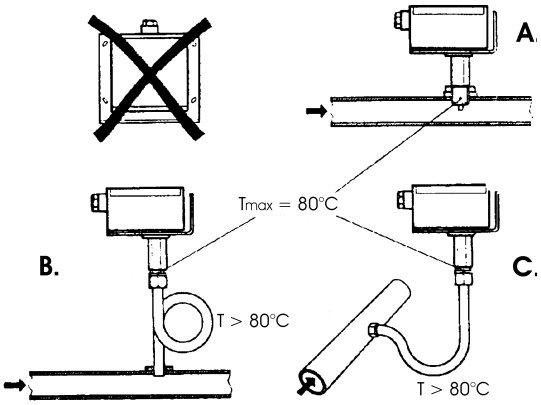

Installing differential pressure sensors for water

Installation with casing facing down not allowed.

With temperature over 80°C, siphons are needed.

To avoid damaging the sensor, you must comply with the following instructions :

when installing: make sure pressure difference is not greater than the value permitted by the sensor

when there are high static pressures, make sure you insert shutoff valves A-B-C.

Putting into operation

Start disable

1=open C1=open C

2=open A2=close B

3=open B3=close A

4= close C

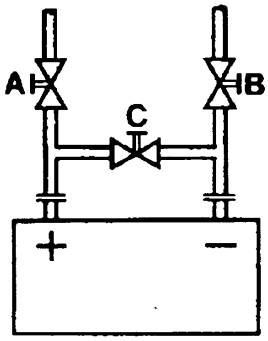

Immersion or strap-on sensors

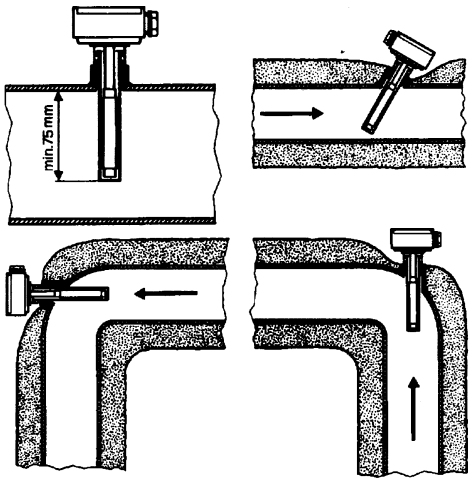

Immersion probes installation

Sensors must be installed on the stretch of pipe in which fluid circulates all the time.

The rigid stem (sensing element doing the measuring) must be inserted by at least 75mm and must face the direction of flow.

Recommended locations: on a bend or on a straight stretch of pipe but tilted by 45° and against the flow of fluid.

Protect them to prevent water from infiltrating (dripping gates, condensation from pipes etc.) .

Installing QAD2.. strap-on sensors

Make sure fluid is circulating in the chosen location.

Eliminate insulation and paintwork (including rust inhibitor) on a min. 100mm length of pipe.

Sensors come with straps for pipes up to 100 mm in diameter .

Placing the probes (QAD22.../QAE21.../QAP21.../RCA...)

With pumps on outlet

with 3 ways valves / with 4 ways valves

Panel system / burner control

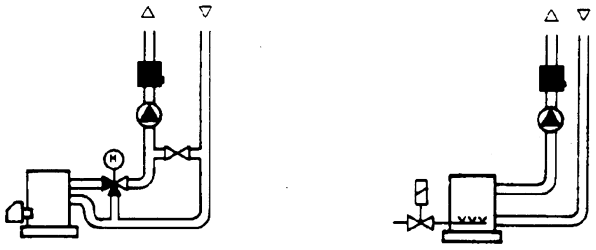

With pumps on return

with 3 ways valves / with 4 ways valves

Strap-on or immersion sensors?

QAD2.. strap-on sensors

Advantages :

- 10 sec. time constant
- Installed with system running (no plumbing work)
- Installation can be changed easily if it proves incorrect

ΠLimits:

- Suitable for pipe diameters max. 100 mm
- Can be affected by currents of air etc.

QAE2... immersion sensors

Advantages:

- Measure "mean" fluid temperature
- No external influence on measurement such as: currents of air, nearby pipes etc.

Limits:

- Time constant with sheath: 20 sec.
- Hard to change installation position if it proves incorrect

Installing differential pressure probes for air

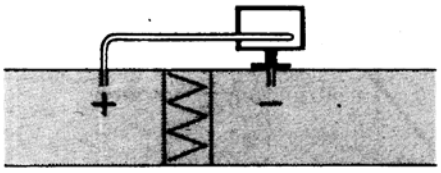

A - Control a filter (clogging)

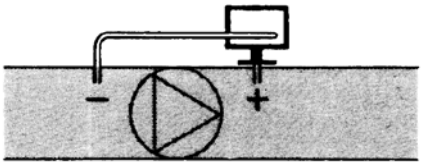

B - Control a fan (upstream/downstream)

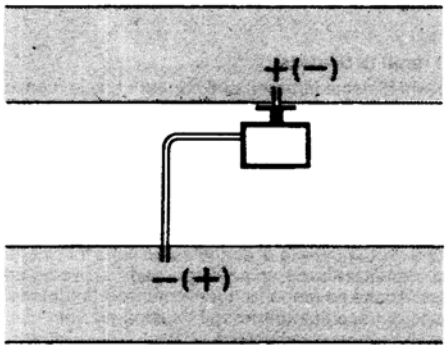

C - Measurement of difference in pressure between two ducts

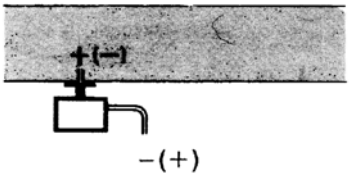

D - Measurement of difference in pressure between two rooms or of inside of duct and outside

Basic principles

Measuring static pressure(i.e. pressure exerted by air on pipe walls)

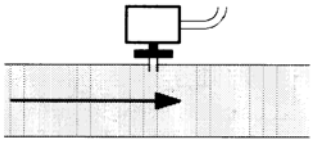

Measuring dinamic pressure

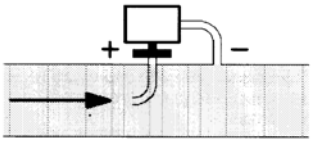

$$Pd = \frac{y\,\vartheta^2}{2g}$$

Legend

y	Kg/m3, specific weight of air
q	m/s, air speed
g	9.81 m/s2 gravity acceleration
Pd	mm C.A., dynamic pressure

Measuring total pressure

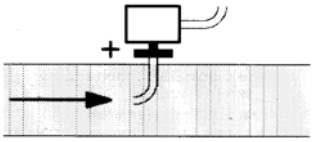

Note: Specifications and data subject to change. Errors and omissions excepted.

MANUALE USER SUPPORT

MULTI-THERMOSTAT

MCX06C

MCX06C is a multi-thermostat with four 100k NTC inputs. It can control up to 4 temperatures showing them (not more than 2 at the same time) on a couple of displays.
It is used to check and adjust oil heater temperatures. it works as follows:
as soon as the burner control gives the GO to the digital 1 input (terminals DI1-COM), the adjustment program runs (the relevant LED is ON). Reading the outlet temperature through the probe **Pb3** (terminals AI3-COM), a PID signal is produced. This signal becomes the set-point for the electric resistors. The electric resistors temperature is read through the probe **Pb1** (terminals AI1-COM) so that a second PID signal is produced. This second PID drives a couple of SCR by means of 0-10 V impulses in order to control the electric resistors temperature.
When the burner is in stand-by, resistor set-point is kept at the temperature set in parameter "**p30**" (see parameter group **REG**).
Probe **Pb4** (terminals AI4-COM) controls the inner heater temperature. As soon the relevant set-point is got, it drives the output number 4 (terminals C4-NO4) linked to the relais KTCN. This allows the oil pump to start and also the burner control proceeds with its cycle.
When set-point **trS** is got to, output number 5 is ON (terminals C5-NO5) linked to the relais KTRS. It switches the resistors off and activates an alarm on the device.
Probe **Pb2** (terminals AI2-COM), when fitted, drives output number 2 (terminals C2-NO2) linked to the relais KTCI. This allows the burner control to proceed with ignition.
See below the set-point recommended figures.

User interface:

Device:

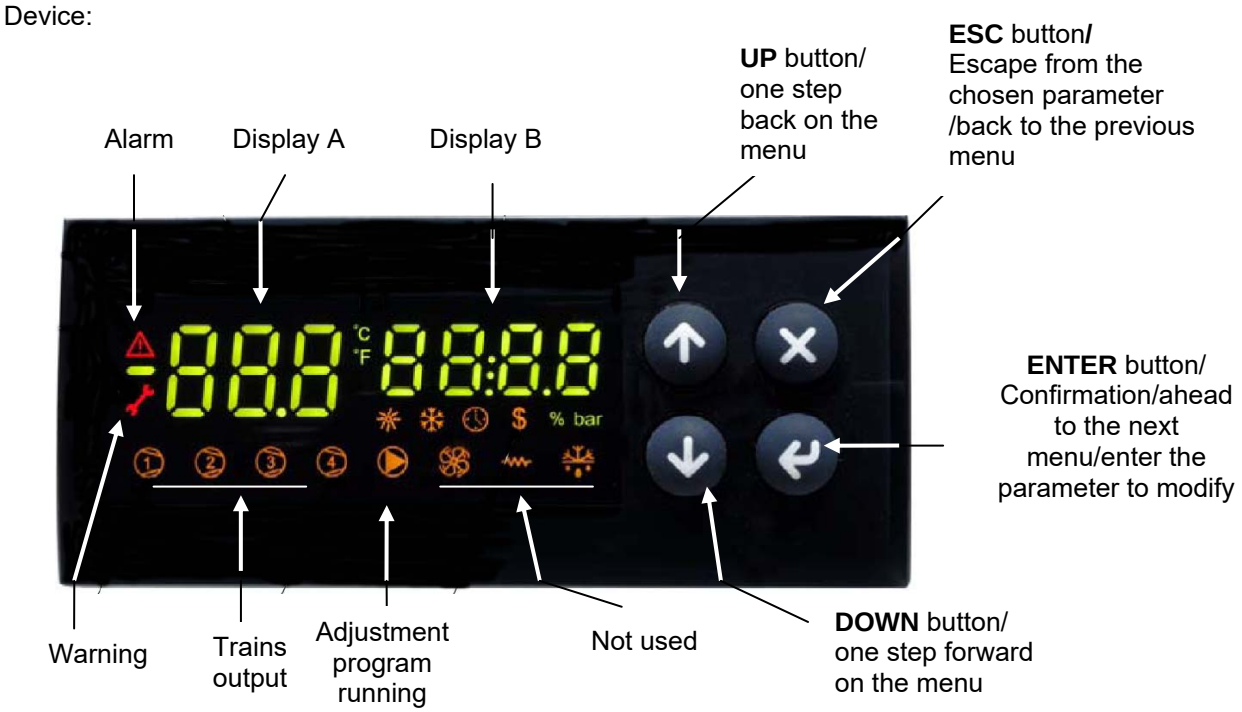

Note :
In normal operation, the display A shows the oil tank resistor temperature (probe Pb1).
In normal operation, the display B shows the oil output temperature (probe Pb3).

Connections from terminal side :

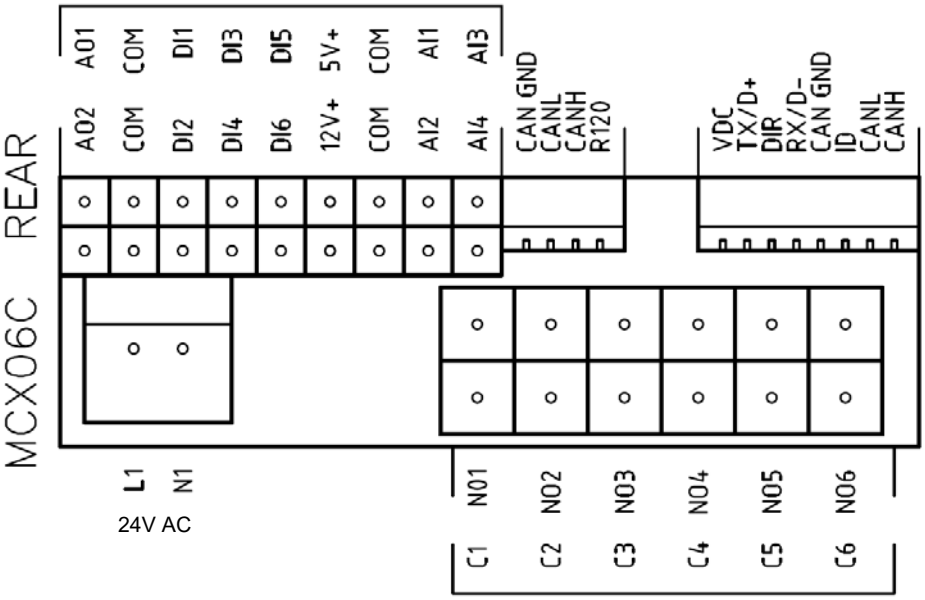

Probe connection:

input **AI1** = probe **Pb1** = set-point "**tr**" = oil heater temperature probe;
input **AI2** = probe **Pb2** = set-point "**tCI**" = plant consent temperature probe (when installed);
input **AI3** = probe **Pb3** = set-point "**OIL**" = oil heater output temperature probe (PID regulation);
input **AI4** = probe **Pb4** = set-point "**tcn**" = oil heater consent temperature probe.

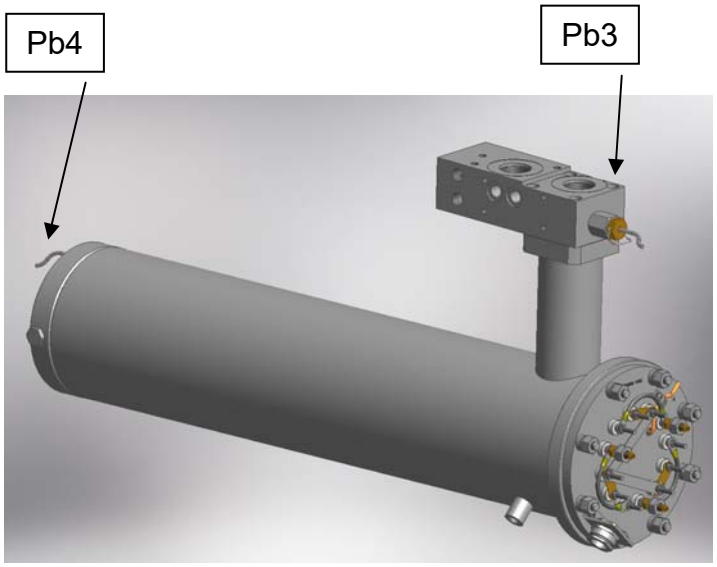

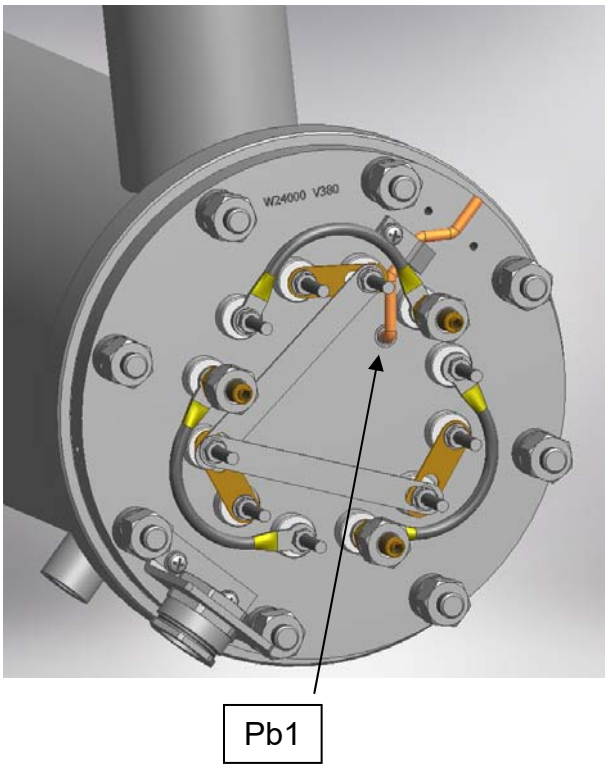

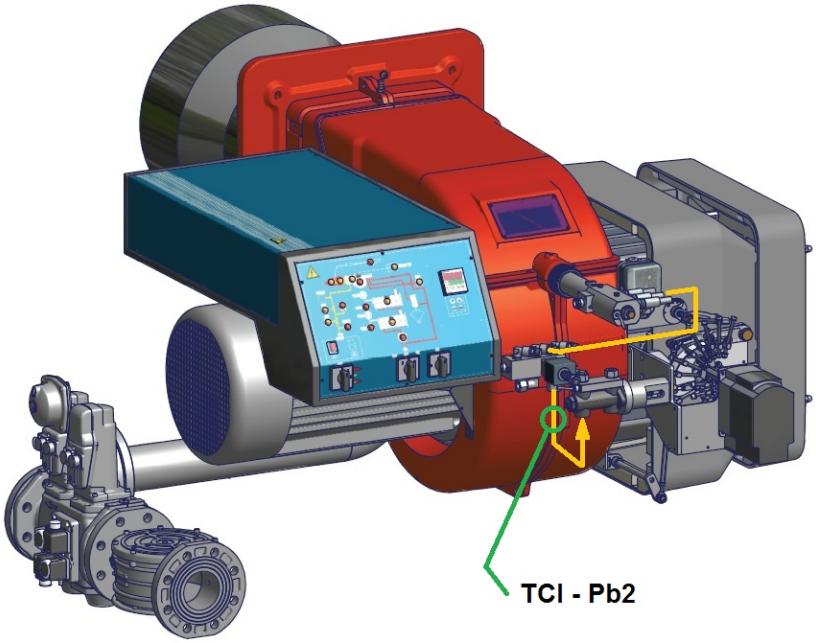

(**tCI - Pb2** probe only for mechanical atomizing burners)

Menu :
To enter the menu below, keep pushing **ENTER** for more than 3 s.

Menu code	Sub-menu code	Function	Notes
Prb		Probes values	You can see in sequence the 4 probe values (UP and DOWN keys): the probe code is on display A (Pb1,..., Pb4) and the probe value is on display B (not fitted or out of work probes show "----").
Log		Login	It defines the access level to menu and parameters (password)
	PAS	Password	Password input
Par		Parameters menu	Access to parameters (you have to login first)
	CnF	Configuration menu	Parameter configuration
	rEG	Regulation menu	Set to set-point, probe, thresholds etc.
ALA		Alarm menu	Access to alarm management
	Act	Active alarms	Show the active alarms
	rES	Reset alarms	Reset of the manual reset alarms
Loc		Lock/Unlock functions	Not used
InF	rEL	Software version	Installed software version
tUN		Autotuning	Activation On, deactivation ESC PID parameter autotuning

Login:
All the parameters inside the **Par** menu are locked by a password.
Without password, only set-points can be modified.
To login, on the log menu, press **ENTER** for more than 3 s. Input your password (level 2 or 3) inside **PAS**
With password for level 3 all the data can be set.

submenu **CnF - configuration parameters group :**

Menu	Parameter	Description	Additional description	Min	Max	Default	U.M.	Visibility condition	Password level	Modbus index
CnF		**CONFIGURATION**							0	
AI1		Analog Input 1							1	
	A1P	Probe 1 Presence	This parameter enables or disables the probe	0	1	1			2	1
	A1C	Calibration Probe 1	Don't modify it	-20,0	20,0	0,0	°C	A1P >0	3	2
AI2		Analog Input 2							1	
	A2P	Probe 2 Presence	This parameter enables or disables the probe	0	1	1			2	3
	A2C	Calibration Probe 2	Don't modify it	-20,0	20,0	0,0	°C	A2P >0	3	4
AI3		Analog Input 3							1	
	A3P	Probe 3 Presence	This parameter enables or disables the probe	0	4	1			2	5
	A3L	Min. Value conversion AI3	Don't modify it	-999,9	999,9	0,0		A3P >2	3	6
	A3H	Max. Value conversion AI3	Don't modify it	-999,9	999,9	30,0		A3P >2	3	7
	A3C	Calibration Probe 3	Don't modify it	-20,0	20,0	0,0	°C	A3P >0	3	8
AI4		Analog Input 4							1	
	A4P	Probe 4 Presence	This parameter enables or disables the probe	0	4	1			2	9
	A4L	Min. Value conversion AI4	Don't modify it	-999,9	999,9	0,0		A4P >2	3	10
	A4H	Max. Value conversion AI4	Don't modify it	-999,9	999,9	30,0		A4P >2	3	11
	A4C	Calibration Probe 4	Don't modify it	-20,0	20,0	0,0	°C	A4P >0	3	12
dI		Digital input							1	
	dI1	Input 1 polarity (Pump)	Change type of digital input (NC o NO)	0	1	1			3	13
	dI2	Alarm polarity from input 2	Change type of digital input (NC o NO)	0	2	2			2	14
	dI3	Alarm polarity from input 3	Change type of digital input (NC o NO)	0	2	2			2	15
	dI4	Alarm polarity from input 4	Change type of digital input (NC o NO)	0	2	2			2	16
	dI5	Alarm polarity from input 5	Change type of digital input (NC o NO)	0	2	2			2	17
	dI6	Alarm polarity from input 6	Change type of digital input (NC o NO)	0	2	2			2	18
dI		Digital output Alarm and Warning							1	
	dO5	Polarity output Warning	Change type of digital input (NC o NO)	0	1	0			3	19
	dO6	Polarity output Alarm	Change type of digital input (NC o NO)	0	1	0			3	20
SIC		Safety probe							1	
	SIp	Selection of safety probe	Probe which also activates the relay Warning (ns. KTRS)	0	4	4			3	21
SyS		Syistem							0	
	dSA	display A output	Probe temperature or set-point to be displayed in the left display	0	8	1			3	22
	dSb	display B output	Probe temperature or set-point to be displayed in the right display	0	8	3			3	23
PAS		Password							1	
	PL1	Password level 1		0	9999	0			1	32
	PL2	Password level 2		0	9999				2	33
	PL3	Password level 3		0	9999				3	34

Menu	Parameter	Description	Additional description	Min	Max	Default	U.M.	Visibility condition	Level	Modbus index
tUN		Autotuning							3	
	tU1	Output temperature hysteresis	Don't modify it	0	50,0	0,5	°C		3	35
	tU2	Startup number	Don't modify it	0	5	2			3	36
	tU3	Measurement cycles number	Don't modify it	1	4	2			3	37
	tU4	Max. differential command exit	Don't modify it	0,01	10,00	10,00	V		3	38
	tU5	Differential reduction exit command (%)	Don't modify it	0	100	15			3	39
	tU6	Calculating mode: 0= Symmetrical; 1=Asymmetrical; 2=Simple	Don't modify it	0	2	2			3	40
	tU7	Enabling	Don't modify it	0	1	1			3	41

Submenu **REG – regulation parameters group :**

Menu	Parameter	Description	Additional description	Min	Max	Default	U.M.	Visibility condition	Level	Modbus index
REG		**REGULATION**							0	
Pb1		Probe 1							0	
	rES	Set-point Probe 1 (Tank resistor)	Don't modify it	-50,0	200,0	0,0	°C		3	42
	AL1	Probe 1 - Low Temperature Alarm Threshold	Don't modify it	-50,0	200,0	-50,0	°C		3	43
	AH1	Probe 1 - High Temperature Alarm Threshold	Don't modify it	-50,0	200,0	200,0	°C		3	44
	d01	Probe 1 differential		0,0	20,0	3,0	°C		3	45
Pb2		Probe 2							0	
	tCI	Set-point Probe 2 (Plant Consent)	Plant consent according to table "**Set point adjustment**"	-50,0	200,0	120,0	°C		0	46
	AL2	Probe 2 - Low Temperature Alarm Threshold	Don't modify it	-50,0	200,0	-50,0	°C		2	47
	AH2	Probe 2 - High Temperature Alarm Threshold	Don't modify it	-50,0	200,0	200,0	°C		2	48
	d02	Probe 2 differential		0,0	20,0	3,0	°C		2	49
Pb3		Probe 3							0	
	rE3	Type of regulation of probe 3 (Oil tank exit)	Type of regulation 0= thermostat; 1= PID (don't modify)	0	1	1			3	50
	OIL	Set-point Probe 3 (Oil tank exit)	Nozzle oil temperature according to the table "**Set point adjustment**"	-50,0	200,0	130,0	°C		0	51
	AL3	Probe 3 - Low Temperature Alarm Threshold (Oil tank exit)	Don't modify it	-50,0	200,0	-50,0	°C		2	52
	AH3	Probe 3 - High Temperature Alarm Threshold (Oil tank exit)	Don't modify it	-50,0	200,0	200,0	°C		2	53
	Pb3	Proportional band for PID Probe 3 (Oil tank exit)	Proportional band for first PID regulation	0,0	200,0	60,0			3	54
	db3	Dead Zone for PID Probe 3 (Oil tank exit)	Dead zone for first PID regulation	0,0	20,0	0,0	°C	rE3 =1	3	55
	rt3	Integral Time (Ti) for PID Probe 3 (Oil tank exit)	Integral time for first PID regulation	0,0	1000,0	120,0	s	rE3 =1	3	56
	dt3	DerivativeTime (Td) for PID Probe 3 (Oil tank exit)	Derivative time for first PID regulation (~ ¼ di rt3)	0,0	300,0	30,0	s	rE3 =1	3	57
	db3	Dead Zone for PID Probe 3 (Oil tank exit)	Dead zone for first PID regulation	0,0	20,0	0,0	°C	rE3 =1	3	55

Menu	Parameter	Description	Additional description	Min	Max	Default	U.M.	Visibility condition	Level	Modbus index
	pi1	Overshooting for Integral action (Oil tank exit)	Don't modify it	100	1000	200		rE3 =1	3	58
	pi2	Derivative action enabling (Oil tank exit)	Don't modify it	0	1	1		rE3 =1	3	59
	pi3	Filtering factor for derivative action (Oil tank exit)	Don't modify it	1	100	20		rE3 =1	3	60
	pi4	Duty cicle PWM for output DO3 and/or AO1 (0-10V)	Don't modify it	1	300	5	s	rE3 =1	3	61
	SL3	Output selection DO3 and/or AO1 (0-10V)	Digital selection output for control thyristors; Don't modify it	0	2	AO1			3	62
	p21	Proportional band for PID Probe 1 (Tank resistor)	Proportional band for second PID regulation	0,0	200,0	50,0		rE3 =1	3	63
	p22	Dead Zone for PID Probe 1 (Tank resistor)	Dead zone for second PID regulation	0,0	20,0	0,0	°C	rE3 =1	3	64
	p23	Integral Time (Ti) for PID Probe 1 (Tank resistor)	Integral time for second PID regulation	0,0	1000,0	110,0	s	rE3 =1	3	65
	p24	DerivativeTime (Td) for PID Probe 1 (Tank resistor)	Derivative time for second PID regulation	0,0	300,0	23,0	s	rE3 =1	3	66
	p25	Overshooting for Integral action (Tank resistor)	Don't modify it	100	1000	200		rE3 =1	3	67
	p26	Derivative action enabling (Tank resistor)	Don't modify it	0	1	1		rE3 =1	3	68
	p27	Filtering factor for derivative action (Tank resistor)	Don't modify it	1	100	20		rE3 =1	3	69
	p28	Min Output PID Probe 3 (Oil tank exit)	Minimum value tank resistor set-point (delta of 100°C above p29)	0,0	1000,0	80,0	°C	rE3 =1	3	70
	p29	Max Output PID Probe 3 (Oil tank exit)	Maximum valuetank resistor set-point	0,0	1000,0	180,0	°C	rE3 =1	3	71
	SP0	Set-point Tank Resistor with oil pump stops (stand by)	Set-point of maintaining resistance during stand by "**Set point adjustment**"	-50,0	200,0	140,0	°C	rE3 =1	0	72
Pb4		Probe 4							0	
	tcn	Setpoint Probe 4 (Oil consent)	Oil consent according table "**Set point adjustment**"	-50,0	200,0	110,0	°C		0	73
	AL4	Low Threshold Probe 4		-50,0	200,0	-50,0	°C		2	74
	trS	Probe 4 - High Temperature Alarm Threshold (Safety Thermostat)	Tank resistor safety temperature according table "**Set point adjustment**"	-50,0	200,0	190,0	°C		0	75
	d04	Probe 4 differential		0,0	20,0	3,0	°C		2	76

Alarms & Warning:
When the red triangle on the top left lights, one or more alarms are activated.
When the red key on the left lights, the output N05-C5 is active and the relay **KTRS** switches the resistors OFF.
Check the reason, correct the failure and, as soon as the temperature is lower than **trS**, reset it through **ALA**/**rES .**
In order to show active alarms and warnings, select the relevant menu through **ALA**/**Act**.and, using the **UP** and **DOWN** buttons, scroll the lines.
In order to perform the manual reset, select **ALA**/**rES**.

Code	Description	Sourse	Active simbol	Reset type
trS	High temperature resistors alarm	probe Pb4 > value trS	red key	Manual
EP1	Probe Pb1 fault	Probe Pb1 fault	red triangle	Automatic
EP2	Probe Pb2 fault	Probe Pb2 fault	red triangle	Automatic
EP3	Probe Pb3 fault	Probe Pb3 fault	red triangle	Automatic
EP4	Probe Pb4 fault	Probe Pb4 fault	red triangle	Automatic

Set point adjustment:

All the parameters inside the **Par** menu are locked by a password. The user can modify only set points, without using any passwords.
The oil viscosity at the nozzle, should be about 1,5°E, which guarantees correct and safe functioning of the burner.
The temperature values in the table, guarantee the respect of that parameter and are valid when the pre heating tank is installed on the burner. For different configurations , please refer to the chapter "Recommendations to design heavy oil feeding plants" on the burner manual
Here below recommended set points:

Menu path				Oil viscosity at 50 °C according to the letter shown in the burner model				
				P	**N**	**E**	**D**	**H**
				89 cSt	< 50 cSt	> 50 cSt < 110 cSt	> 110 cSt < 400 cSt	> 400 cSt < 4000 cSt
				12 °E	< 7°E	> 7 °E < 15 °E	> 15 °E < 50 °E	> 50 °E < 530 °E
Par								
rEG	Pb1	tr	Oil heater temperature probe	parameter not visible				
	Pb2	tCI	Plant consent temperature probe (when installed)	20 °C	70 °C	70 °C	70 °C	---
	Pb3	Oil	oil heater output temperature probe (PID regulation);	60-70 °C	110-120 °C	120-130 °C	130-140 °C	140-150 °C
		SP0	Set-point oil heater with oil pump stopped (stand-by)	45 °C	120 °C	130 °C	140 °C	150 °C
	Pb4	tcn	Oil heater consent temperature probe	40 °C	100 °C	100 °C	110 °C	120 °C
		trS	Safety temperature tank resistors (manual reset)	120 °C	190-200 °C	190-200 °C	190-200 °C	190-200 °C

The above temperature values are suggested and refer to a plant designed according to the prescriptions in the burner user manual.
The suggested values can change in reference to the fuel oil specifications.

USER MANUAL OF MULTI-THERMOSTAT

MCX06C

MCX06C is a multi-thermostat with four 100k NTC inputs. It can control up to 4 temperatures showing them (not more than 2 at the same time) on a couple of displays.
It is used to check and adjust oil heater temperatures.

User interface:
Device:

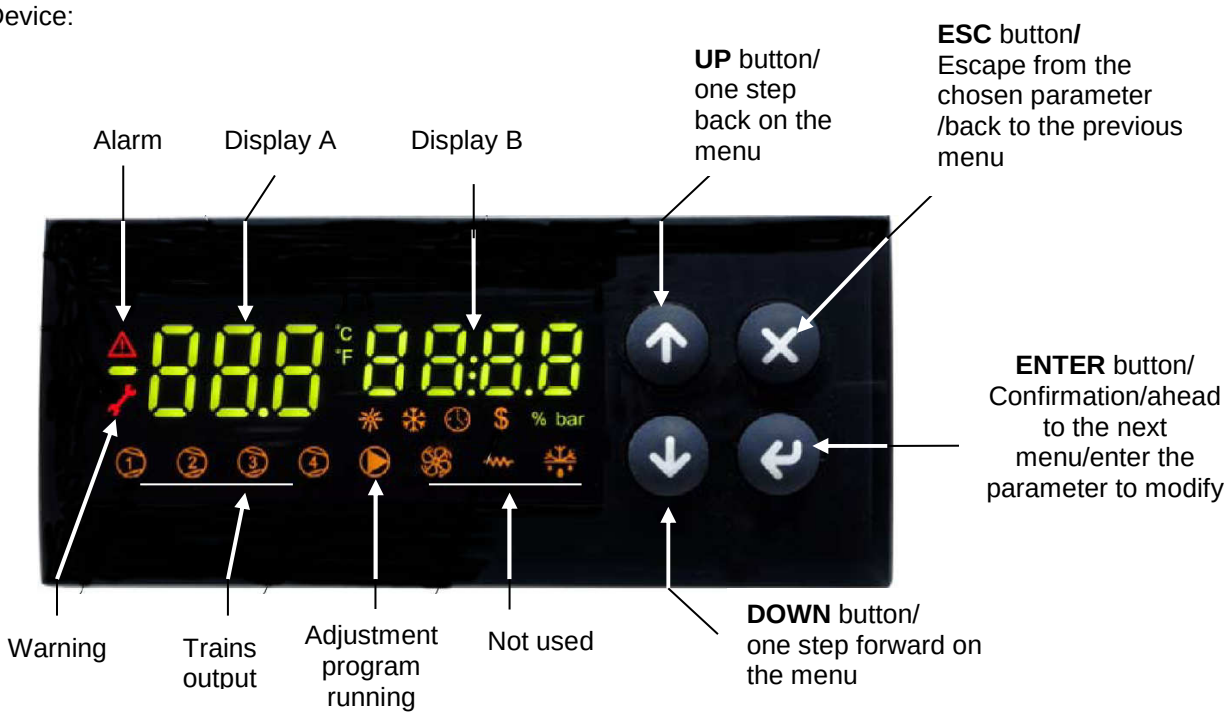

Note :
In normal operation, the display A shows the oil tank resistor temperature (probe Pb1).
In normal operation, the display B shows the oil output temperature (probe Pb3).

Connections from terminal side:

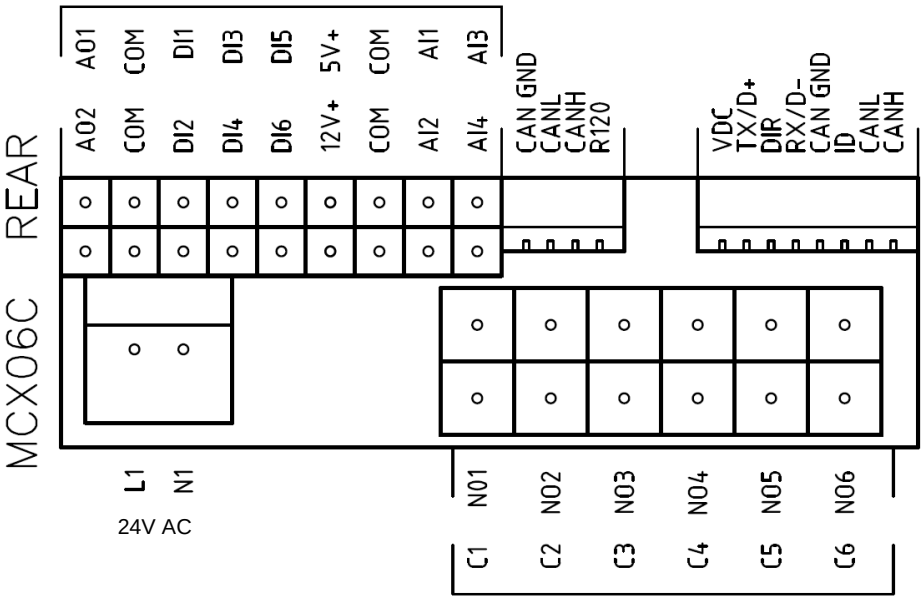

Probe connection:
input **AI1** = probe **Pb1** = set-point "**tr**" = oil heater temperature probe;
input **AI2** = probe **Pb2** = set-point "**tCI**" = plant consent temperature probe (when installed);
input **AI3** = probe **Pb3** = set-point "**OIL**" = oil heater output temperature probe (PID regulation);
input **AI4** = probe **Pb4** = set-point "**tcn**" = oil heater consent temperature probe.

Menu:
To enter the menu below, keep pushing **ENTER** for more than 3 s.

Menu code	Sub-menu code	Function	Notes
Prb		Probes values	You can see in sequence the 4 probe values (UP and DOWN keys): the probe code is on display A (Pb1,..., Pb4) and the probe value is on display B (not fitted or out of work probes show "----").
Log		Login	It defines the access level to menu and parameters (password)
	PAS	Password	Password input
Par		Parameters menu	Access to parameters (you have to login first)
	CnF	Configuration menu	Parameter configuration
	rEG	Regulation menu	Set to set-point, probe, thresholds etc.
ALA		Alarm menu	Access to alarm management
	Act	Active alarms	Show the active alarms
	rES	Reset alarms & Warning	Reset of the manual reset alarms and warning
Loc		Lock/Unlock functions	Not used
InF	rEL	Software version	Installed software version
tUN		Autotuning	Activation On, deactivation ESC PID parameter autotuning

Alarms & Warning:
When the red triangle on the top left lights, one or more alarms are activated.
When the red key on the left lights, the output N05-C5 is active and the relay **KTRS** switches the resistors OFF.
Check the reason, correct the failure and, as soon as the temperature is lower than **trS**, reset it through **ALA/rES .**
In order to show active alarms and warnings, select the relevant menu through **ALA/Act**.and, using the **UP** and **DOWN** buttons, scroll the lines.
In order to perform the manual reset, select **ALA/rES**.

Code	Description	Sourse	Active simbol	Reset type
trS	High temperature resistors alarm	probe Pb4 > value trS	red key	Manual
EP1	Probe Pb1 fault	Probe Pb1 fault	red triangle	Automatic
EP2	Probe Pb2 fault	Probe Pb2 fault	red triangle	Automatic
EP3	Probe Pb3 fault	Probe Pb3 fault	red triangle	Automatic
EP4	Probe Pb4 fault	Probe Pb4 fault	red triangle	Automatic

Set point adjustment:
All the parameters inside the **Par** menu are locked by a password.
The user can modify only set points (menu **rEG**), without using any passwords.
The oil viscosity at the nozzle, should be about 1,5°E, which guarantees correct and safe functioning of the burner.
The temperature values in the table, guarantee the respect of that parameter and are valid when the pre heating tank is installed on the burner. For different configurations , please refer to the chapter "Recommendations to design heavy oil feeding plants" in the burner manual.
Here below recommended set points:

Menu path				Oil viscosity at 50 °C according to the letter show n in the burner model				
				P	**N**	**E**	**D**	**H**
				89 cSt	< 50 cSt	> 50 cSt < 110 cSt	> 110 cSt < 400 cSt	> 400 cSt < 4000 cSt
				12 °E	< 7°E	> 7 °E < 15 °E	> 15 °E < 50 °E	> 50 °E < 530 °E
Par								
rEG	Pb1	tr	Oil heater temperature probe	parameter not visible				
	Pb2	tCI	Plant consent temperature probe (when installed)	20 °C	70 °C	70 °C	70 °C	---
	Pb3	Oil	oil heater output temperature probe (PID regulation);	60-70 °C	110-120 °C	120-130 °C	130-140 °C	140-150 ° C
		SP0	Set-point oil heater with oil pump stopped (stand-by)	45 °C	120 °C	130 °C	140 °C	150 °C
	Pb4	tcn	Oil heater consent temperature probe	40 °C	100 °C	100 °C	110 °C	120 °C
		trS	Safety temperature tank resistors (manual reset)	120 °C	190-200 °C	190-200 °C	190-200 °C	190-200 °C

The above temperature values are suggested and refer to a plant designed according to the prescriptions in the burner user manual. The suggested values can change in reference to the fuel oil specifications.

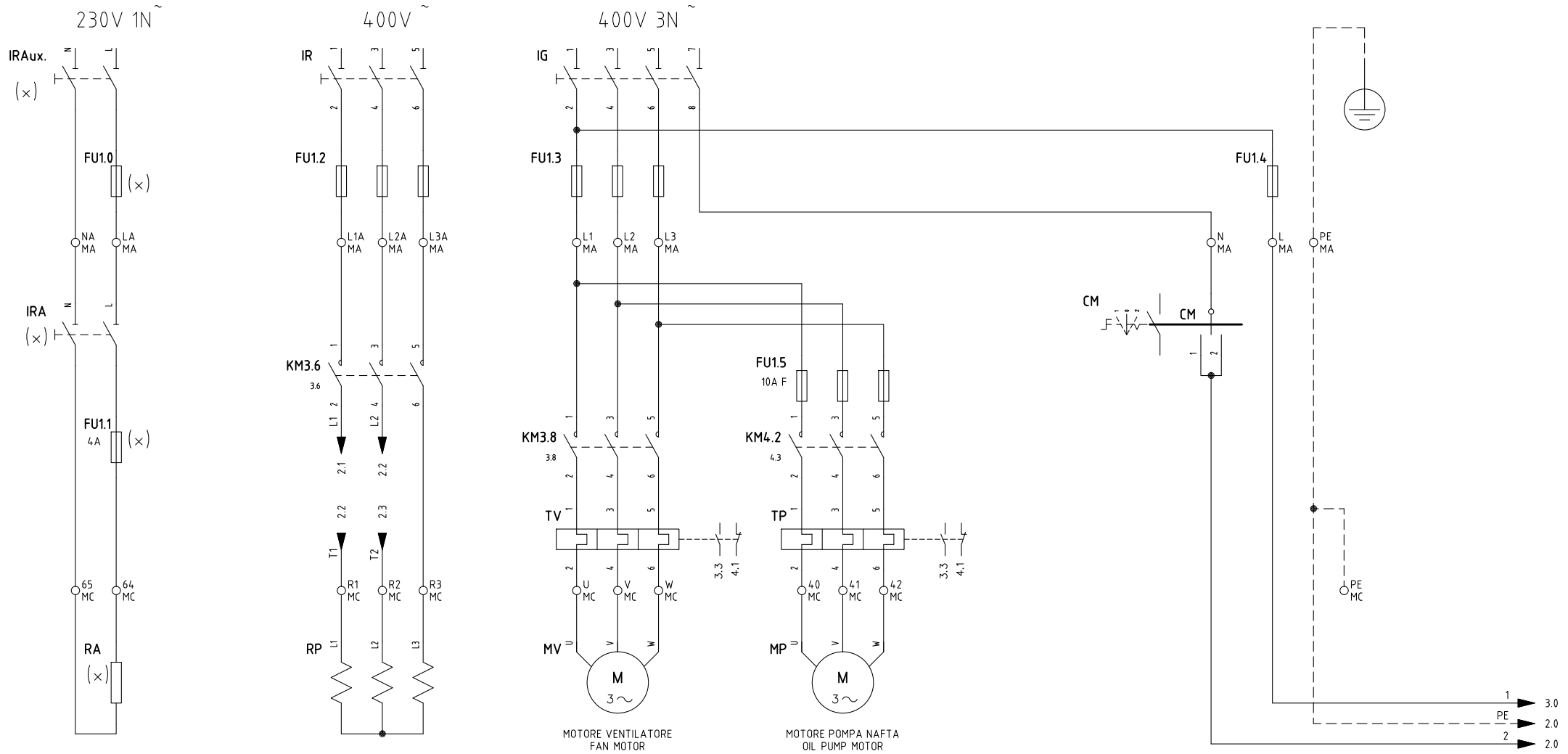

(×)
INSTALLATO SOLO SU ALCUNE VERSIONI
INSTALLED ON ANY VERSIONS ONLY

REV.	MODIFICA	DATA	FIRME
01	MODIFIED MCX06C CONNECTIONS	04/02/13	U. PINTON

UNIGAS

Impianto: *TIPO/TYPE KP60/.../KP93A – KR512A*
MODELLO Mx.PR.x.xx.A.x.xx

Descrizione: *CON MULTI–TERMOSTATO MCX06C*
WITH MCX06C MULTI–THERMOSTAT

Ordine:
Commessa:
Esecutore: U. PINTON
Data Controllato: 04/02/2012
Controllato: S. MARCHETTI

Data: 19/11/2012
Revisione: 01
Dis. N. 05 – 972

PREC.: /
FOGLIO: 1
SEGUE: 2
TOTALE: 9

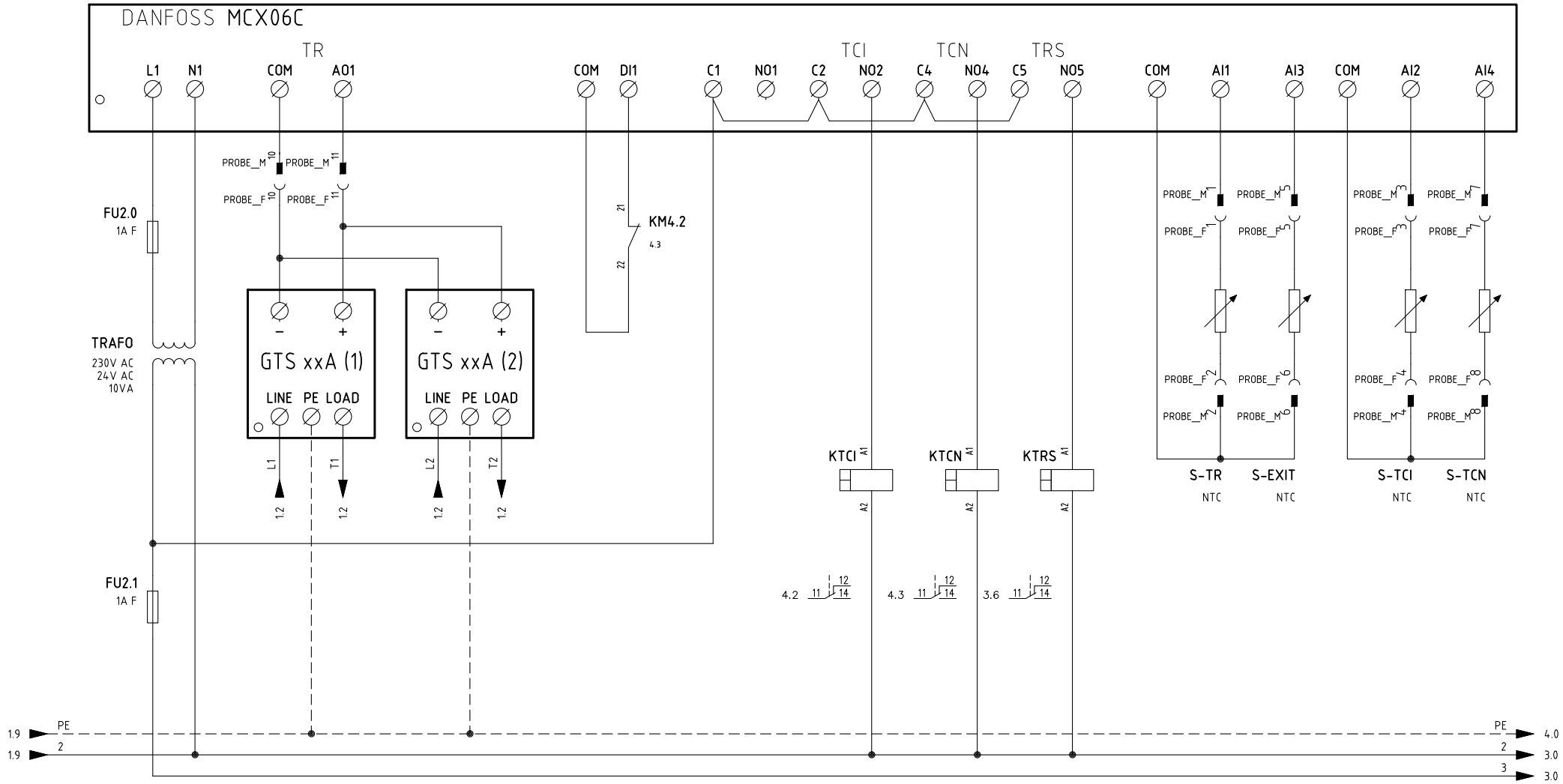

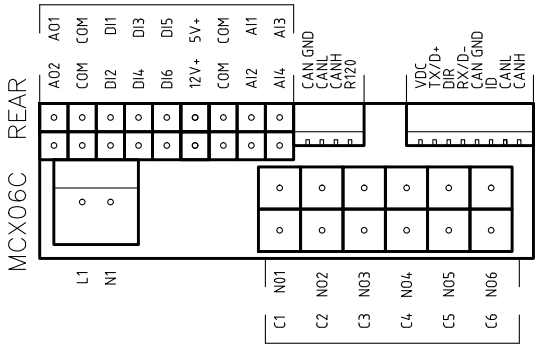

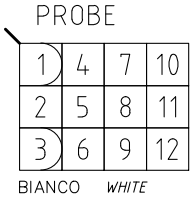

VISTA LATO COMPONENTI (SONDE)
COMPONENTS SIDE VIEW (PROBE)

Data 19/11/2012		PREC. 1	FOGLIO 2
Revisione 01			
Dis. N. 05 – 972		SEGUE 3	TOTALE 9

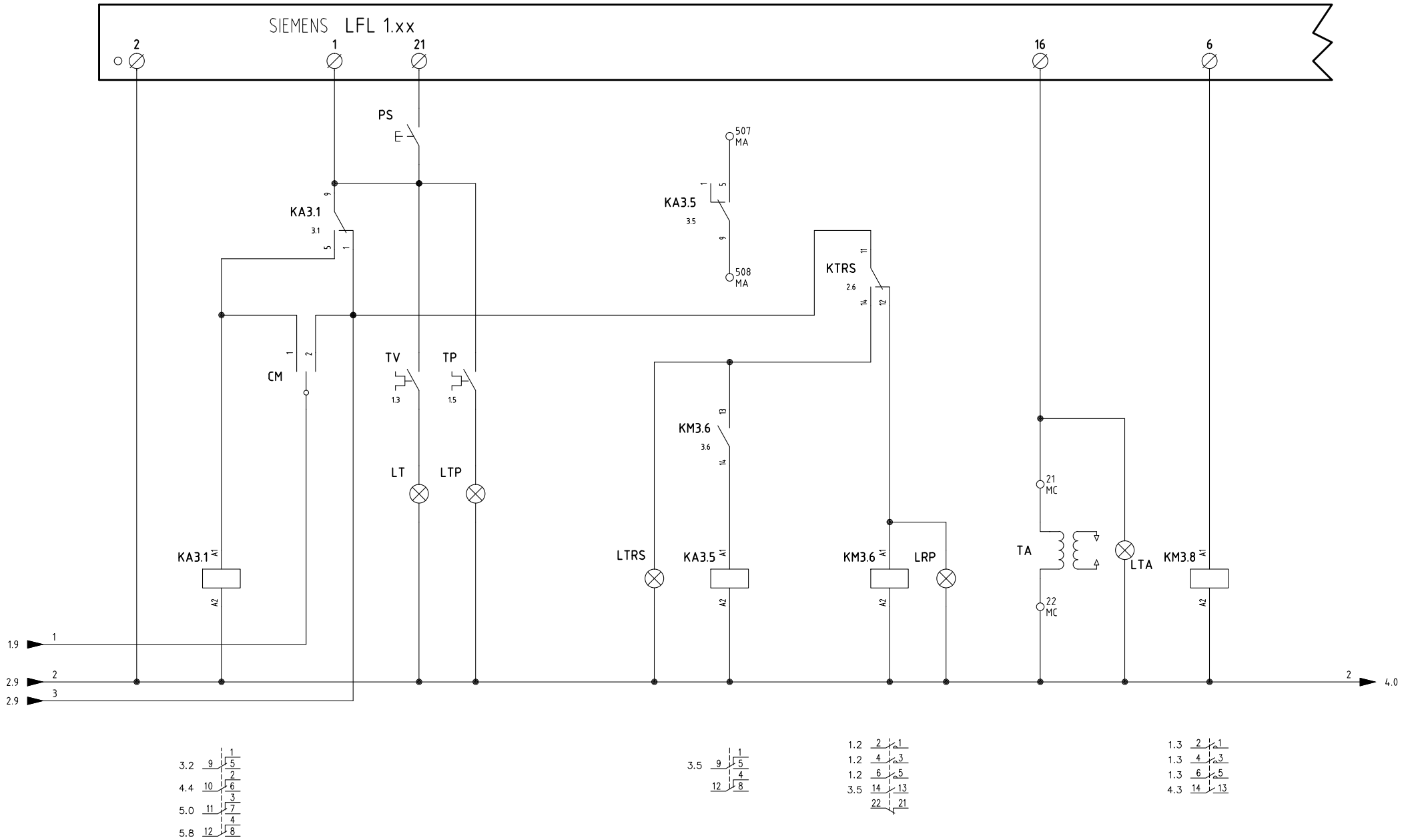

Data	19/11/2012	PREC.	FOGLIO
Revisione	01	2	3
Dis. N.	05 – 972	SEGUE	TOTALE
		4	9

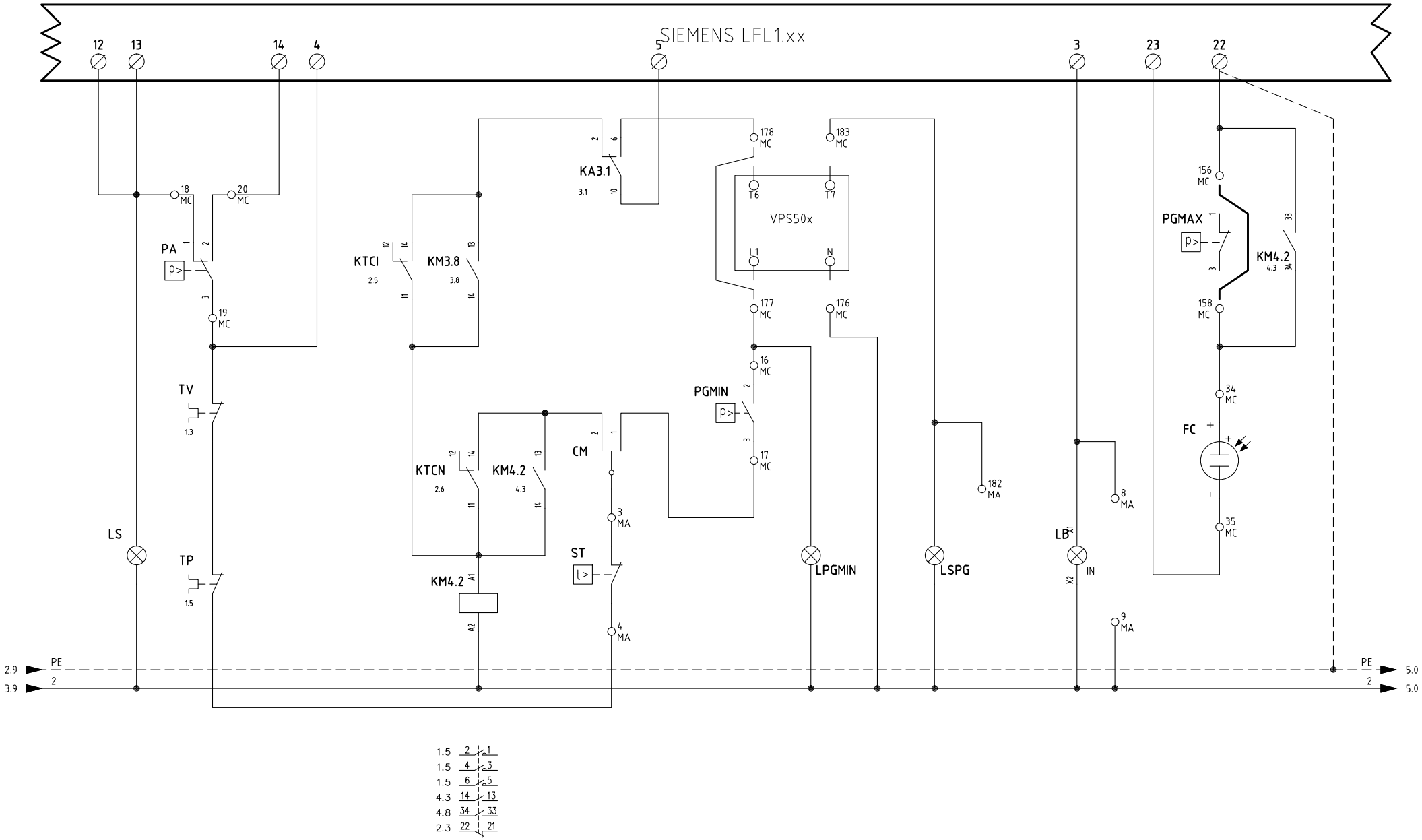

1.5	2	1
1.5	4	3
1.5	6	5
4.3	14	13
4.8	34	33
2.3	22	21

Data 19/11/2012		PREC.	FOGLIO
Revisione 01		3	4
Dis. N. 05 – 972		SEGUE	TOTALE
		5	9

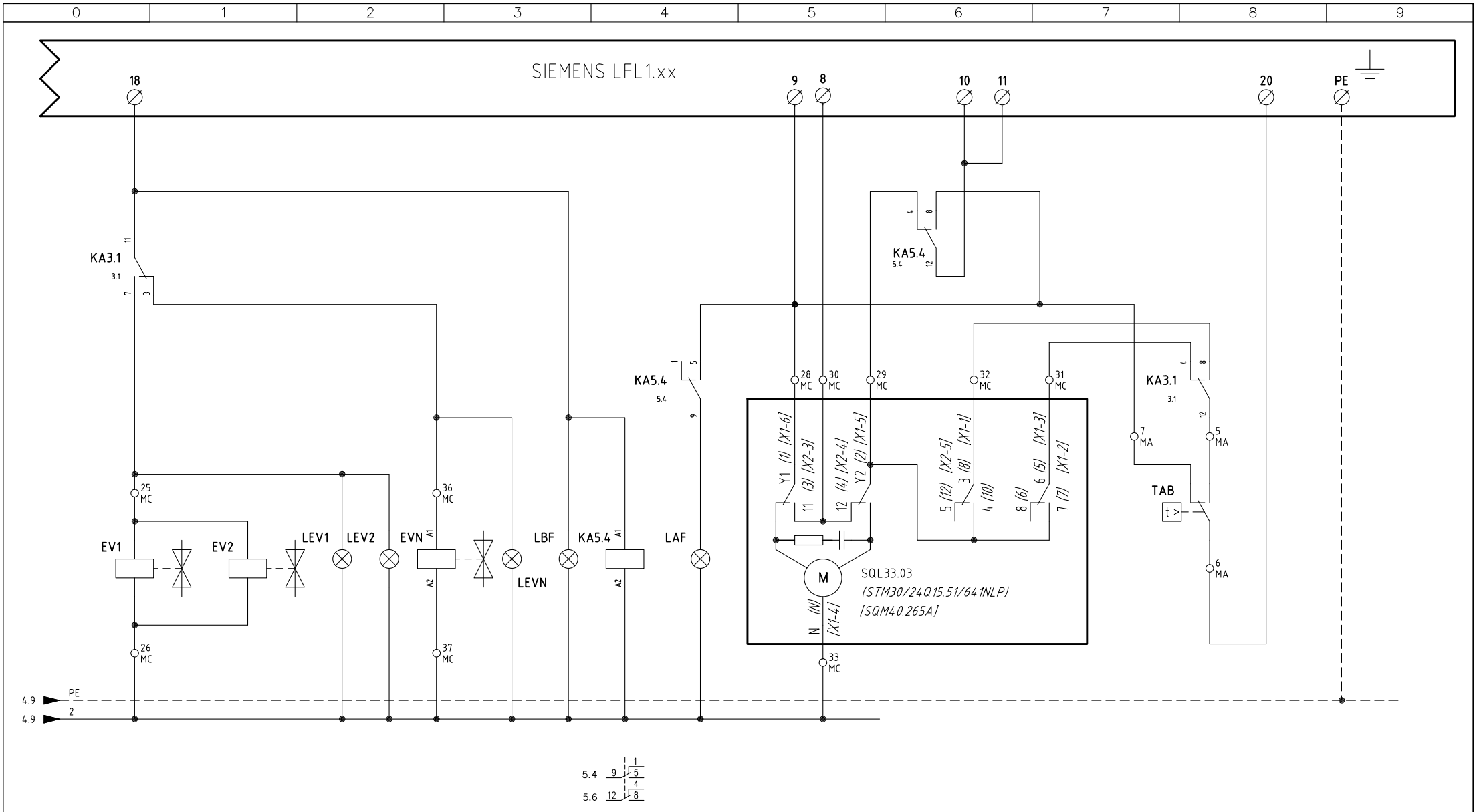

Data	19/11/2012	PREC.	FOGLIO
Revisione	01	4	5
Dis. N.	05 – 972	SEGUE	TOTALE
		6	9

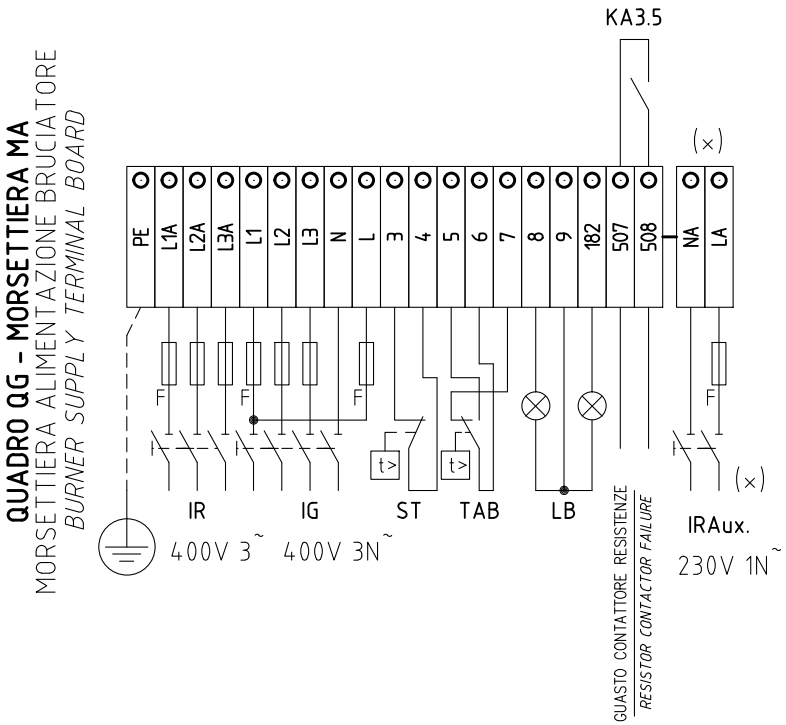

(x)
INSTALLATO SOLO SU ALCUNE VERSIONI
INSTALLED ON ANY VERSIONS ONLY

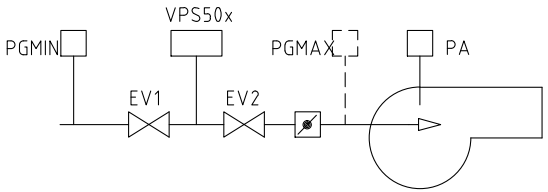

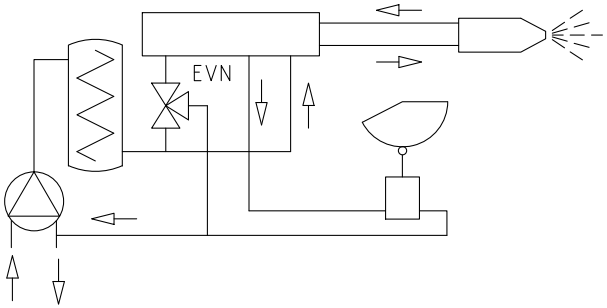

Data 19/11/2012		PREC.	FOGLIO
Revisione 01		5	6
Dis. N. 05 – 972		SEGUE	TOTALE
		7	9

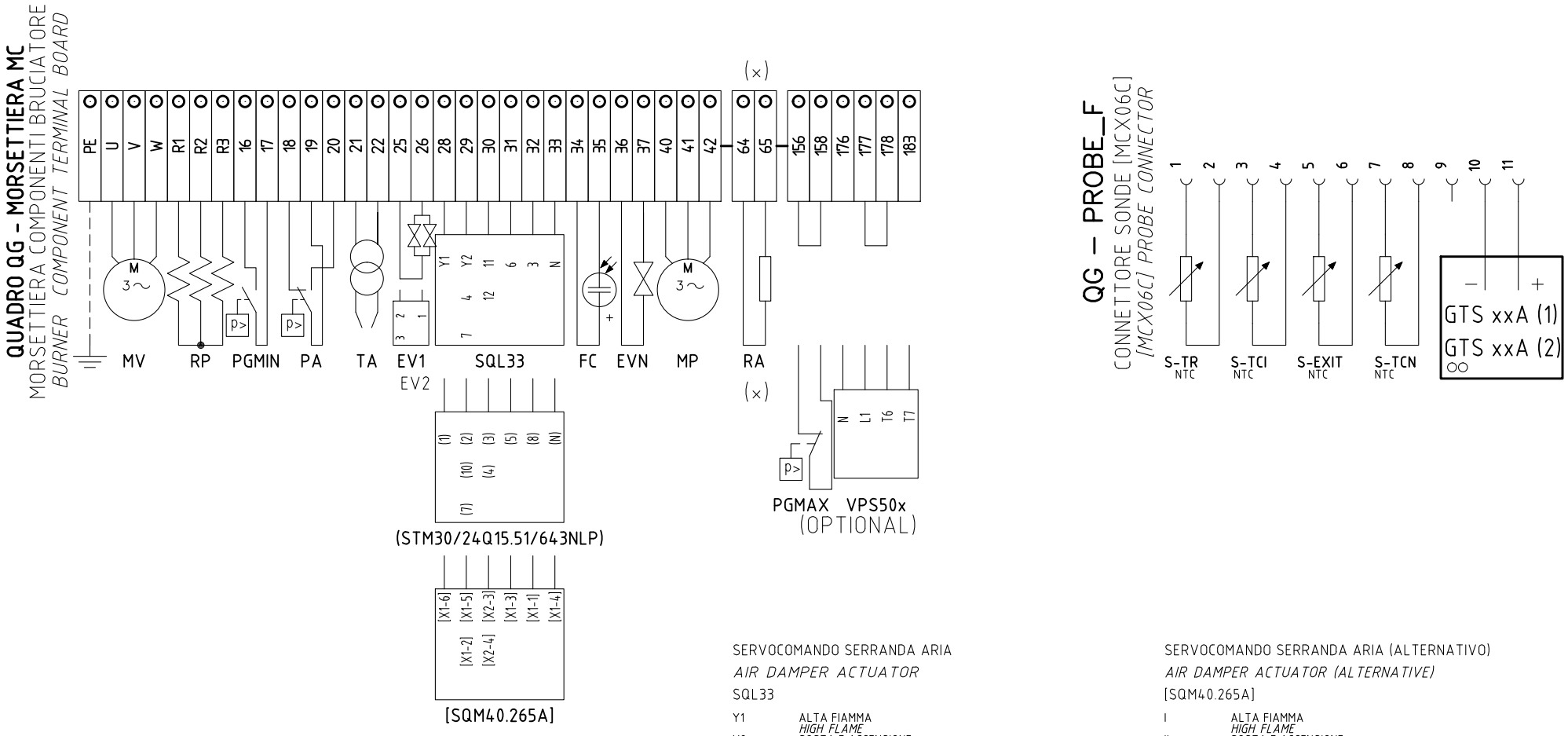

SERVOCOMANDO SERRANDA ARIA
AIR DAMPER ACTUATOR
SQL33

Y1	ALTA FIAMMA *HIGH FLAME*
Y2	SOSTA E ACCENSIONE *STAND-BY AND IGNITION*
3	BASSA FIAMMA GAS *GAS LOW FLAME*
6	BASSA FIAMMA NAFTA *OIL LOW FLAME*

SERVOCOMANDO SERRANDA ARIA (ALTERNATIVO)
AIR DAMPER ACTUATOR (ALTERNATIVE)
[SQM40.265A]

I	ALTA FIAMMA *HIGH FLAME*
II	SOSTA E ACCENSIONE *STAND-BY AND IGNITION*
III	BASSA FIAMMA GAS *GAS LOW FLAME*
IV	BASSA FIAMMA NAFTA *OIL LOW FLAME*

SERVOCOMANDO SERRANDA ARIA (ALTERNATIVO)
AIR DAMPER ACTUATOR (ALTERNATIVE)
(STM30/24Q15.51/641NLP)

I	ALTA FIAMMA *HIGH FLAME*
II	SOSTA E ACCENSIONE *STAND-BY AND IGNITION*
III	BASSA FIAMMA GAS *GAS LOW FLAME*
V	BASSA FIAMMA NAFTA *OIL LOW FLAME*

(x)
INSTALLATO SOLO SU ALCUNE VERSIONI
INSTALLED ON ANY VERSIONS ONLY

Data 19/11/2012	PREC.	FOGLIO
Revisione 01	6	7
Dis. N. 05 – 972	SEGUE	TOTALE
	8	9

	SIGLA/ITEM	FOGLIO/SHEET	DESCRIZIONE	DESCRIPTION
	(STM30/24Q15.51/641NLP)	5	SERVOCOMANDO SERRANDA ARIA (ALTERNATIVO)	AIR DAMPER ACTUATOR (ALTERNATIVE)
	CM	1	COMMUTATORE FUNZIONAMENTO 1)METANO 0)SPENTO 2)BIOGAS	MANUAL OPERATION SWITCH 1)NATURAL GAS 0)OFF 2)BIOGAS
	EV1	5	ELETTROVALVOLA GAS LATO RETE (O GRUPPO VALVOLE)	UPSTREAM GAS SOLENOID VALVE (OR VALVES GROUP)
	EV2	5	ELETTROVALVOLA GAS LATO BRUCIATORE (O GRUPPO VALVOLE)	DOWNSTREAM GAS SOLENOID VALVE (OR VALVES GROUP)
	EVN	5	ELETTROVALVOLA NAFTA	OIL SOLENOID VALVE
	FC	4	SONDA UV RILEVAZIONE FIAMMA	UV FLAME DETECTOR
(x)	FU1.0	1	FUSIBILE LINEA RESISTENZE AUSILIARIE	LINE AUXILIARY HEATERS FUSE
(x)	FU1.1	1	FUSIBILE RESISTENZE AUSILIARIE	AUXILIARY HEATERS FUSE
	FU1.2	1	FUSIBILI DI LINEA	LINE FUSES
	FU1.3	1	FUSIBILI DI LINEA	LINE FUSES
	FU1.4	1	FUSIBILE DI LINEA	LINE FUSE
	FU1.5	1	FUSIBILI LINEA POMPA	PUMP LINE FUSES
	FU2.0	2	FUSIBILE AUSILIARIO	AUXILIARY FUSE
	FU2.1	2	FUSIBILE AUSILIARIO	AUXILIARY FUSE
	GTS xxA (1)	2	TIRISTORE	THYRISTOR
	GTS xxA (2)	2	TIRISTORE	THYRISTOR
	IG	1	INTERRUTTORE GENERALE	MAINS SWITCH
	IR	1	INTERRUTTORE LINEA RESISTENZE PRERISCALDATORE	PRE-HEATING RESISTOR LINE SWITCH
(x)	IRA	1	INTERRUTTORE RESISTENZE AUSILIARIE	AUXILIARY HEATERS SWITCH
(x)	IRAux.	1	INTERRUTTORE RESISTENZE AUSILIARIE	AUXILIARY HEATERS SWITCH
	KA3.1	3	RELE' AUSILIARIO	AUXILIARY RELAY
	KA3.5	3	RELE' AUSILIARIO SEGNALAZIONE GUASTO CONTATTORE RESISTENZE	AUXILIARY RELAY FOR RESISTOR CONTACTOR FAILURE
	KA5.4	5	RELE' AUSILIARIO	AUXILIARY RELAY
	KM3.6	3	CONTATTORE RESISTENZE PRERISCALDATORE [RP]	PRE-HEATING RESISTOR [RP] CONTACTOR
	KM3.8	3	CONTATTORE MOTORE VENTILATORE	FAN MOTOR CONTACTOR
	KM4.2	4	CONTATTORE MOTORE POMPA NAFTA	OIL PUMP MOTOR CONTACTOR
	KTCI	2	RELE' AUSILIARIO	AUXILIARY RELAY
	KTCN	2	RELE' AUSILIARIO	AUXILIARY RELAY
	KTRS	2	RELE' AUSILIARIO	AUXILIARY RELAY
	LAF	5	LAMPADA SEGNALAZIONE ALTA FIAMMA BRUCIATORE	BURNER IN HIGH FLAME INDICATOR LIGHT
	LB	4	LAMPADA SEGNALAZIONE BLOCCO BRUCIATORE	INDICATOR LIGHT FOR BURNER LOCK-OUT
	LBF	5	LAMPADA SEGNALAZIONE BASSA FIAMMA BRUCIATORE	BURNER IN LOW FLAME INDICATOR LIGHT
	LEV1	5	LAMPADA SEGNALAZIONE APERTURA [EV1]	INDICATOR LIGHT FOR OPENING OF ELECTRO-VALVE [EV1]

(x)
INSTALLATO SOLO SU ALCUNE VERSIONI
INSTALLED ON ANY VERSIONS ONLY

	SIGLA/ITEM	FOGLIO/SHEET	DESCRIZIONE	DESCRIPTION
	LEV2	5	LAMPADA SEGNALAZIONE APERTURA [EV2]	INDICATOR LIGHT FOR OPENING OF ELECTRO-VALVE [EV2]
	LEVN	5	LAMPADA SEGNALAZIONE APERTURA [EVN]	INDICATOR LIGHT FOR OPENING OF ELECTRO-VALVE [EVN]
	LFL 1.xx	3	APPARECCHIATURA CONTROLLO FIAMMA	CONTROL BOX
	LPGMIN	4	LAMPADA SEGNALAZIONE PRESENZA GAS IN RETE	INDICATOR LIGHT FOR PRESENCE OF GAS IN THE NETWORK
	LRP	3	LAMPADA SEGNALAZIONE FUNZIONAMENTO PRERISCALDATORE [RP]	INDICATOR LIGHT FOR PRE-HEATING RESISTOR [RP] OPERATION
	LS	4	LAMPADA SEGNALAZIONE SOSTA BRUCIATORE	INDICATOR LIGHT FOR BURNER STAND-BY
	LSPG	4	LAMPADA SEGNALAZIONE BLOCCO CONTROLLO TENUTA VALVOLE	INDICATOR LIGHT FOR LEAKAGE OF VALVES
	LT	3	LAMPADA SEGNALAZIONE BLOCCO TERMICO MOTORE VENTILATORE	INDICATOR LIGHT FOR FAN MOTOR OVERLOAD THERMAL CUTOUT
	LTA	3	LAMPADA SEGNALAZIONE TRASFORMATORE DI ACCENSIONE	IGNITION TRANSFORMER INDICATOR LIGHT
	LTP	3	LAMPADA SEGNALAZIONE BLOCCO TERMICO MOTORE POMPA	INDICATOR LIGHT FOR PUMP MOTOR OVERLOAD THERMAL CUTOUT
	LTRS	3	LAMPADA SEGNALAZIONE BLOCCO TERMOSTATO DI SICUREZZA [TRS]	INDICATOR LIGHT FOR [TRS] SAFETY THERMOSTAT
	MCX06C	2	REGOLATORE TEMPERATURE NAFTA	OIL TEMPERATURE REGULATOR
	MP	1	MOTORE POMPA NAFTA	OIL PUMP MOTOR
	MV	1	MOTORE VENTILATORE	FAN MOTOR
	PA	4	PRESSOSTATO ARIA	AIR PRESSURE SWITCH
	PGMAX	4	PRESSOSTATO GAS DI MASSIMA PRESSIONE (OPTIONAL)	MAXIMUM PRESSURE GAS SWITCH (OPTIONAL)
	PGMIN	4	PRESSOSTATO GAS DI MINIMA PRESSIONE	MINIMUM GAS PRESSURE SWITCH
	PS	3	PULSANTE SBLOCCO FIAMMA	FLAME UNLOCK BUTTON
(x)	RA	1	RESISTENZE AUSILIARIE	AUXILIARY HEATERS
	RP	1	RESISTENZE PRERISCALDATORE NAFTA	PRE-HEATING TANK RESISTORS
	S-EXIT	2	SONDA TEMPERATURA USCITA BARILOTTO	TANK OUTLET OIL TEMPERATURE PROBE
	S-TCI	2	SONDA TEMPERATURA CONSENSO IMPIANTO	PLANT CONSENT TEMPERATURE PROBE
	S-TCN	2	SONDA TEMPERATURA CONSENSO NAFTA	OIL CONSENT TEMPERATURE PROBE
	S-TR	2	SONDA TEMPERATURA RESISTENZE	RESISTOR TEMPERATURE PROBE
	SQL33.03	5	SERVOCOMANDO SERRANDA ARIA	AIR DAMPER ACTUATOR
	ST	4	SERIE TERMOSTATI/PRESSOSTATI	SERIES OF THERMOSTATS OR PRESSURE SWITCHES
	TA	3	TRASFORMATORE DI ACCENSIONE	IGNITION TRANSFORMER
	TAB	5	TERMOSTATO/PRESSOSTATO ALTA-BASSA FIAMMA	HIGH-LOW THERMOSTAT/PRESSURE SWITCHES
	TP	1	TERMICO MOTORE POMPA	PUMP MOTOR THERMAL
	TRAFO	2	TRASFORMATORE AUSILIARIO	AUXILIARY TRANSFORMER
	TV	1	TERMICO MOTORE VENTILATORE	FAN MOTOR THERMAL
	VPS50x	4	CONTROLLO DI TENUTA VALVOLE GAS (OPTIONAL)	GAS PROVING SYSTEM (OPTIONAL)
	[SQM40.265A]	5	SERVOCOMANDO SERRANDA ARIA (ALTERNATIVO)	AIR DAMPER ACTUATOR (ALTERNATIVE)

(x)
INSTALLATO SOLO SU ALCUNE VERSIONI
INSTALLED ON ANY VERSIONS ONLY

Data 19/11/2012		PREC.	FOGLIO
Revisione 01		8	9
Dis. N. 05 – 972		SEGUE	TOTALE
		/	9