HP20 - HP30

Double stage Gas - light oil dual fuel burners

MANUAL OF INSTALLATION - USE - MAINTENANCE

CIB UNIGAS

BURNERS - BRUCIATORI - BRULERS - BRENNER - QUEMADORES - ГОРЕЛКИ

M03936CC Rel 2.4 12/2024

DANGERS, WARNINGS AND NOTES OF CAUTION

THIS MANUAL IS SUPPLIED AS AN INTEGRAL AND ESSENTIAL PART OF THE PRODUCT AND MUST BE DELIVERED TO THE USER.

INFORMATION INCLUDED IN THIS SECTION ARE DEDICATED BOTH TO THE USER AND TO PERSONNEL FOLLOWING PRODUCT INSTALLATION AND MAINTENANCE.

THE USER WILL FIND FURTHER INFORMATION ABOUT OPERATING AND USE RESTRICTIONS, IN THE SECOND SECTION OF THIS MANUAL. WE HIGHLY RECOMMEND TO READ IT.

CAREFULLY KEEP THIS MANUAL FOR FUTURE REFERENCE.

1) GENERAL INTRODUCTION

- The equipment must be installed in compliance with the regulations in force, following the manufacturer's instructions, by qualified personnel.
- Qualified personnel means those having technical knowledge in the field of components for civil or industrial heating systems, sanitary hot water generation and particularly service centres authorised by the manufacturer.
- Improper installation may cause injury to people and animals, or damage to property, for which the manufacturer cannot be held liable.
- Remove all packaging material and inspect the equipment for integrity.

In case of any doubt, do not use the unit - contact the supplier.

The packaging materials (wooden crate, nails, fastening devices, plastic bags, foamed polystyrene, etc), should not be left within the reach of children, as they may prove harmful.

- Before any cleaning or servicing operation, disconnect the unit from the mains by turning the master switch OFF, and/or through the cut-out devices that are provided.
- Make sure that inlet or exhaust grilles are unobstructed.
- In case of breakdown and/or defective unit operation, disconnect the unit. Make no attempt to repair the unit or take any direct action.

Contact qualified personnel only.

Units shall be repaired exclusively by a servicing centre, duly authorised by the manufacturer, with original spare parts and accessories.

Failure to comply with the above instructions is likely to impair the unit's safety.

To ensure equipment efficiency and proper operation, it is essential that maintenance operations are performed by qualified personnel at regular intervals, following the manufacturer's instructions.

- When a decision is made to discontinue the use of the equipment, those parts likely to constitute sources of danger shall be made harmless.
- In case the equipment is to be sold or transferred to another user, or in case the original user should move and leave the unit behind, make sure that these instructions accompany the equipment at all times so that they can be consulted by the new owner and/or the installer.
- This unit shall be employed exclusively for the use for which it is meant. Any other use shall be considered as improper and, therefore, dangerous.

The manufacturer shall not be held liable, by agreement or otherwise, for damages resulting from improper installation, use and failure to comply with the instructions supplied by the manufacturer.The occurrence of any of the following circustances may cause explosions, polluting unburnt gases (example: carbon monoxide CO), burns, serious harm to people, animals and things:

- Failure to comply with one of the WARNINGS in this chapter
- Incorrect handling, installation, adjustment or maintenance of the burner
- Incorrect use of the burner or incorrect use of its parts or optional supply

2) SPECIAL INSTRUCTIONS FOR BURNERS

- The burner should be installed in a suitable room, with ventilation openings complying with the requirements of the regulations in force, and sufficient for good combustion.
- Only burners designed according to the regulations in force should be used.
- This burner should be employed exclusively for the use for which it was designed.
- Before connecting the burner, make sure that the unit rating is the same as delivery mains (electricity, gas oil, or other fuel).
- Observe caution with hot burner components. These are, usually, near to the flame and the fuel pre-heating system, they become hot during the unit operation and will remain hot for some time after the burner has stopped.

When the decision is made to discontinue the use of the burner, the user shall have qualified personnel carry out the following operations:

a Remove the power supply by disconnecting the power cord from the mains.

b Disconnect the fuel supply by means of the hand-operated shut-off valve and remove the control handwheels from their spindles.

Special warnings

- Make sure that the burner has, on installation, been firmly secured to the appliance, so that the flame is generated inside the appliance fire-box.
- Before the burner is started and, thereafter, at least once a year, have qualified personnel perform the following operations:

a set the burner fuel flow rate depending on the heat input of the appliance;

b set the flow rate of the combustion-supporting air to obtain a combustion efficiency level at least equal to the lower level required by the regulations in force;

c check the unit operation for proper combustion, to avoid any harmful or polluting unburnt gases in excess of the limits permitted by the regulations in force;

d make sure that control and safety devices are operating properly;

e make sure that exhaust ducts intended to discharge the products of combustion are operating properly;

f on completion of setting and adjustment operations, make sure that all mechanical locking devices of controls have been duly tightened;

g make sure that a copy of the burner use and maintenance instructions is available in the boiler room.

- In case of a burner shut-down, reser the control box by means of the RESET pushbutton. If a second shut-down takes place, call the Technical Service, **without trying to RESET further**.
- The unit shall be operated and serviced by qualified personnel only, in compliance with the regulations in force.

3) GENERAL INSTRUCTIONS DEPENDING ON FUEL USED

3a) ELECTRICAL CONNECTION

- For safety reasons the unit must be efficiently earthed and installed as required by current safety regulations.
- It is vital that all saftey requirements are met. In case of any doubt, ask for an accurate inspection of electrics by qualified personnel, since the manufacturer cannot be held liable for damages that may be caused by failure to correctly earth the equipment.
- Qualified personnel must inspect the system to make sure that it is adequate to take the maximum power used by the equipment shown on the equipment rating plate. In particular, make sure that the system cable cross section is adequate for the power absorbed by the unit.
- No adaptors, multiple outlet sockets and/or extension cables are permitted to connect the unit to the electric mains.
- An omnipolar switch shall be provided for connection to mains, as required by the current safety regulations.
- The use of any power-operated component implies observance of a few basic rules, for example:
  - do not touch the unit with wet or damp parts of the body and/or with bare feet;
  - do not pull electric cables;
  - do not leave the equipment exposed to weather (rain, sun, etc.) unless expressly required to do so;
  - do not allow children or inexperienced persons to use equipment;
- The unit input cable shall not be replaced by the user.
  In case of damage to the cable, switch off the unit and contact qualified personnel to replace.
  When the unit is out of use for some time the electric switch supplying all the power-driven components in the system (i.e. pumps, burner, etc.) should be switched off.

3b) FIRING WITH GAS, LIGHT OIL OR OTHER FUELS

GENERAL

- The burner shall be installed by qualified personnel and in compliance with regulations and provisions in force; wrong installation can cause injuries to people and animals, or damage to property, for which the manufacturer cannot be held liable.
- Before installation, it is recommended that all the fuel supply system pipes be carefully cleaned inside, to remove foreign matter that might impair the burner operation.
- Before the burner is commissioned, qualified personnel should inspect the following:

a the fuel supply system, for proper sealing;
b the fuel flow rate, to make sure that it has been set based on the firing rate required of the burner;
c the burner firing system, to make sure that it is supplied for the designed fuel type;
d the fuel supply pressure, to make sure that it is included in the range shown on the rating plate;
e the fuel supply system, to make sure that the system dimensions are adequate to the burner firing rate, and that the system is equipped with all the safety and control devices required by the regulations in force.

- When the burner is to remain idle for some time, the fuel supply tap or taps should be closed.

SPECIAL INSTRUCTIONS FOR USING GAS

Have qualified personnel inspect the installation to ensure that:

a the gas delivery line and train are in compliance with the regulations and provisions in force;
b all gas connections are tight;
c the boiler room ventilation openings are such that they ensure the air supply flow required by the current regulations, and in any case are sufficient for proper combustion.

- Do not use gas pipes to earth electrical equipment.
- Never leave the burner connected when not in use. Always shut the gas valve off.
- In case of prolonged absence of the user, the main gas delivery valve to the burner should be shut off.

Precautions if you can smell gas

a do not operate electric switches, the telephone, or any other item likely to generate sparks;
b immediately open doors and windows to create an air flow to purge the room;
c close the gas valves;
d contact qualified personnel.

- Do not obstruct the ventilation openings of the room where gas appliances are installed, to avoid dangerous conditions such as the development of toxic or explosive mixtures.

DIRECTIVES AND STANDARDS

Gas burners

European directives

-Regulation 2016/426/UE (appliances burning gaseous fuels)
-2014/35/UE (Low Tension Directive)
-2014/30/UE (Electromagnetic compatibility Directive)
-2006/42/EC (Machinery Directive)

Harmonized standards

-UNI EN 676 (Automatic forced draught burners for gaseous fuels)
-EN 55014-1 (Electromagnetic compatibility- Requirements for house hold appliances, electric tools and similar apparatus)
-EN 60204-1:2006 (Safety of machinery – Electrical equipment of machines.)
-CEI EN 60335-1 (Specification for safety of household and similar electrical appliances);
-CEI EN 60335-2-102 (Household and similar electrical appliances. Safety. Particular requirements for gas, oil and solid-fuel burning appliances having electrical connections).
-UNI EN ISO 12100:2010 (Safety of machinery - General principles for design - Risk assessment and risk reduction);

Light oil burners

European directives

-2014/35/UE (Low Tension Directive)
-2014/30/UE (Electromagnetic compatibility Directive)
-2006/42/EC (Machinery Directive)

Harmonized standards

-UNI EN 267-2011(Automatic forced draught burners for liquid fuels)
-EN 55014-1 (Electromagnetic compatibility- Requirements for house hold appliances, electric tools and similar apparatus)
-EN 60204-1:2006 (Safety of machinery – Electrical equipment of machines.)
-CEI EN 60335-1 (Specification for safety of household and similar electrical appliances);
-CEI EN 60335-2-102 (Household and similar electrical appliances. Safety. Particular requirements for gas, oil and solid-fuel burning appliances having electrical connections).
-UNI EN ISO 12100:2010 (Safety of machinery - General principles for design - Risk assessment and risk reduction);

Heavy oil burners

European Directives

-2014/35/UE (Low Tension Directive)
-2014/30/UE (Electromagnetic compatibility Directive)
-2006/42/EC (Machinery Directive)

Harmonized standards

-UNI EN 267(Automatic forced draught burners for liquid fuels)
-EN 55014-1 (Electromagnetic compatibility- Requirements for house hold appliances, electric tools and similar apparatus)
-EN 60204-1:2006 (Safety of machinery – Electrical equipment of machines.)
-CEI EN 60335-1 (Specification for safety of household and similar electrical appliances);
-CEI EN 60335-2-102 (Household and similar electrical appliances. Safety. Particular requirements for gas, oil and solid-fuel burning appliances having electrical connections).
-UNI EN ISO 12100:2010 (Safety of machinery - General principles for design - Risk assessment and risk reduction);

Gas - Light oil burners

European Directives

-Regulation 2016/426/UE (appliances burning gaseous fuels)
-2014/35/UE (Low Tension Directive)
-2014/30/UE (Electromagnetic compatibility Directive)
-2006/42/EC (Machinery Directive)

Harmonized standards

-UNI EN 676 (Automatic forced draught burners for gaseous fuels)
-UNI EN 267(Automatic forced draught burners for liquid fuels)
-EN 55014-1 (Electromagnetic compatibility- Requirements for house hold appliances, electric tools and similar apparatus)
-EN 60204-1:2006 (Safety of machinery – Electrical equipment of machines.)
-CEI EN 60335-1 (Specification for safety of household and similar electrical appliances);
-CEI EN 60335-2-102 (Household and similar electrical appliances. Safety. Particular requirements for gas, oil and solid-fuel burning appliances having electrical connections).
-UNI EN ISO 12100:2010 (Safety of machinery - General principles for design - Risk assessment and risk reduction);

Gas - Heavy oil burners

European directives:

-Regulation 2016/426/UE (appliances burning gaseous fuels)
-2014/35/UE (Low Tension Directive)
-2014/30/UE (Electromagnetic compatibility Directive)
-2006/42/EC (Machinery Directive)

Harmonized standards

-UNI EN 676 (Automatic forced draught burners for gaseous fuels)
-EN 55014-1 (Electromagnetic compatibility- Requirements for house hold appliances, electric tools and similar apparatus)
-EN 60204-1:2006 (Safety of machinery – Electrical equipment of machines.)
-CEI EN 60335-1 (Specification for safety of household and similar electrical appliances);
-CEI EN 60335-2-102 (Household and similar electrical appliances. Safety. Particular requirements for gas, oil and solid-fuel burning appliances having electrical connections).
-UNI EN ISO 12100:2010 (Safety of machinery - General principles for design - Risk assessment and risk reduction);

Industrial burners

European directives

-Regulation 2016/426/UE (appliances burning gaseous fuels)
-2014/35/UE (Low Tension Directive)
-2014/30/UE (Electromagnetic compatibility Directive)
-2006/42/EC (Machinery Directive)

Harmonized standards

-EN 55014-1 (Electromagnetic compatibility- Requirements for house hold appliances, electric tools and similar apparatus)
-EN 746-2 (Industrial thermoprocessing equipment - Part 2: Safety requirements for combustion and fuel handling systems)
-UNI EN ISO 12100:2010 (Safety of machinery - General principles for design - Risk assessment and risk reduction);
-EN 60204-1:2006 (Safety of machinery – Electrical equipment of machines.)
-EN 60335-2 (Electrical equipment of non-electric appliances for household and similar purposes. Safety requirements)

Burner data plate

For the following information, please refer to the data plate:

- burner type and burner model: must be reported in any communication with the supplier
- burner ID (serial number): must be reported in any communication with the supplier
- date of production (year and month)
- information about fuel type and network pressure

Type	--
Model	--
Year	--
S.Number	--
Output	--
Oil Flow	--
Fuel	--
Category	--
Gas Pressure	--
Viscosity	--
El.Supply	--
El.Consump.	--
Fan Motor	--
Protection	--
Drwaing n°	--
P.I.N.	--

SYMBOLS USED

WARNING! Failure to observe the warning may result in irreparable damage to the unit or damage to the environment

DANGER! Failure to observe the warning may result in serious injuries or death.

WARNING! Failure to observe the warning may result in electric shock with lethal consequences

Figures, illustrations and images used in this manual may differ in appearance from the actual product.

BURNER SAFETY

The burners - and the configurations described below - comply with the regulations in force regarding health, safety and the environment. For more in-depth information, refer to the declarations of conformity that are an integral part of this Manual.

DANGER! Incorrect motor rotation can seriously damage property and injure people.

Residual risks deriving from misuse and prohibitions

The burner has been built in order to make its operation safe; there are, however, residual risks.

Do not touch any mechanical moving parts with your hands or any other part of your body. Injury hazard
Do not touch any parts containing fuel (i.e. tank and pipes). Scalding hazard
Do not use the burner in situations other than the ones provided for in the data plate.
Do not use fuels other than the ones stated.
Do not use the burner in potentially explosive environments.
Do not remove or by-pass any machine safety devices.
Do not remove any protection devices or open the burner or any other component while the burner is running.
Do not disconnect any part of the burner or its components while the burner is running.
Untrained staff must not modify any linkages.

After any maintenance, it is important to restore the protection devices before restarting the machine.
All safety devices must be kept in perfect working order.
Personnel authorized to maintain the machine must always be provided with suitable protections.

ATTENTION: while running, the parts of the burner near the generator (coupling flange) are subject to overheating. Where necessary, avoid any contact risks by wearing suitable PPE.

PART I: INSTALLATION

GENERAL FEATURES

This series represents monobloc gas burners made in die-cast aluminium housing, that can burn either gas or light oil, thanks to the adjustable combustion head which allows a good performance with both fuels. They can be provided in progressive or fully-modulating version.

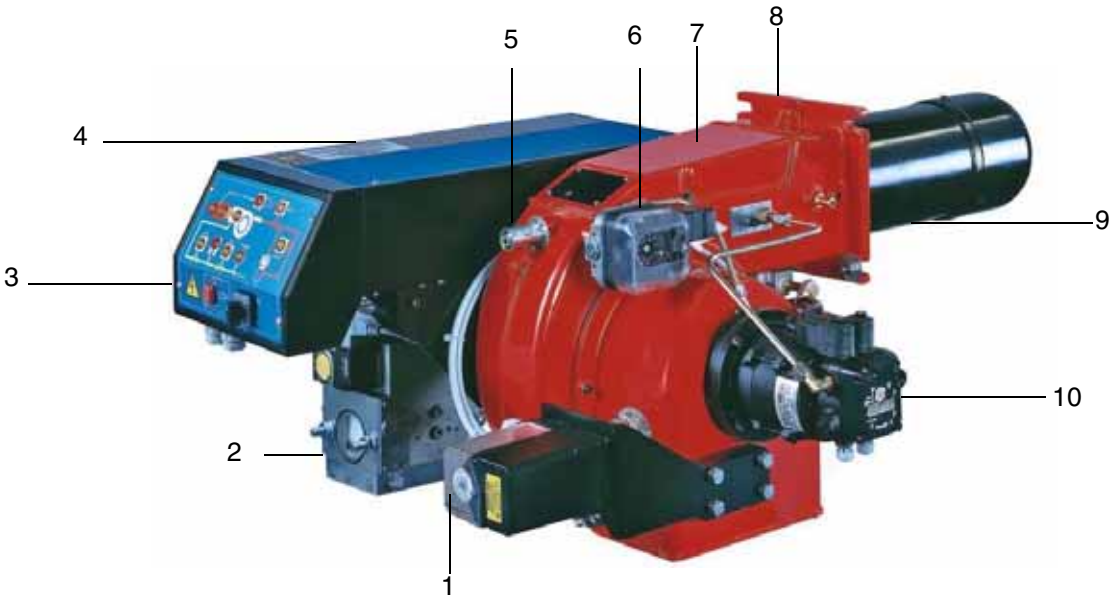

Fig. 1

1 Actuator
2 Gas valve group
3 Control panel with startup switch
4 Electrical panel cover
5 Combustion head adjusting screw
6 Air pressure switch
7 Burner coverBlast tube-Combustion head group
8 Flange
9 Blast tube-Combustion head ass.y
10 Light oil pump

Gas operation: the gas coming from the supply line, passes through the valves group provided with filter and stabiliser. This one forces the pressure in the utilisation limits. The actuator (1) moves the air damper and the gas butterfly valve to allow the optimisation of the gas flue values, as to get an efficient combustion.

Light oil operation:the fuel coming from the supply line, is pushed by the pump (10) to the nozzle and then into the combustion chamber, where the mixture between fuel and air takes place and consequently the flame.

In the burners, the mixture bertween fuel and air, to perform clean and efficient combustion, is activated by atomisation of oil into very small particles. This process is achieved making pressurised oil passing through the nozzle.

The pump (10) main function is to transfer oil from the tank to the nozzle in the desired quantity and pressure. To adjust this pressure, pumps are provided with a pressure regulator (except for some models for which a separate regulating valve is provided). Other pumps are provided with two pressure regulators: one for the high and one for low pressure (in double-stage systems with one nozzle).

The adjustable combustion head can improve the burner performance. The combustion head (9) determines the energetic quality and the geometry of the flame. Fuel and comburent are routed into separated ways as far as the zone of flame generation (combustion chamber). The control panel (3), placed on the burner front side, shows each operating stage.

How to interpret the burner "Performance curve"

To check if the burner is suitable for the boiler to which it must be installled, the following parameters are needed:

- furnace input, in kW or kcal/h (kW = kcal/h / 860);
- backpressure (data are available on the boiler's ID plate or in the user's manual).

Example:

Furnace input: 600kW

Backpressure: 4mbar

In the "Performance curve" diagram (Fig. 2), draw a vertical line matching the furnace input value and an horizontal line matching the backpressure value. The burner is suitable if the intersection point A is inside the performance curve.

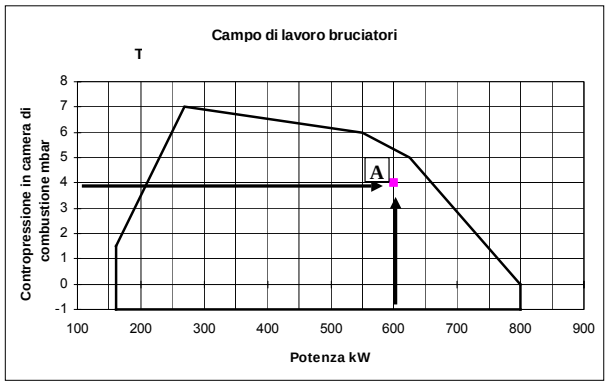

Fig. 2

Data are referred to standard conditions: atmospheric pressure at 1013mbar, ambient temperature at 15°C

Checking the proper gas train size To check the proper gas train size, it is necessary to know the available gas pressure value upstream the burner's gas valve. Then subtract the backpressure. The result is called **p_{gas}.** Draw a vertical line matching the furnace input value (600kW, in the example), quoted on the x-axis, as far as intercepitng the network pressure curve, according to the installed gas train (DN65, in the example). From the interception point, draw an horizontal line as far as matching, on the y-axis, the value of pressure necessary to get the requested furnace input. This value must be lower or equal to the **p_{gas}** value, calculated before.

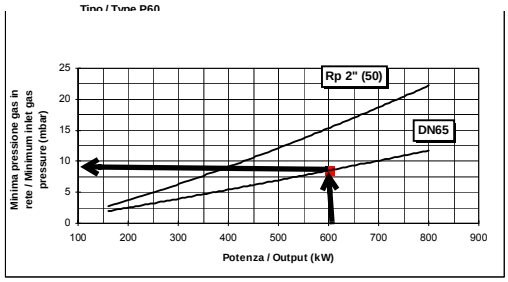

Fig. 3

Matching the burner to the boiler

The burners described in this manual have been tested with combustion chambers that comply with EN676 regulation and whose dimensions are described in the diagram . In case the burner must be coupled with boilers with a combustion chamber smaller in diameter or shorter than those described in the diagram, please contact the supplier, to verify that a correct matching is possible, with respect of the application involved. To correctly match the burner to the boiler verify the necessary input and the pressure in combustion chamber are included in the burner performance curve; otherwise the choice of the burner must be revised consulting the burner manufacturer. To choose the blast tube lenght follow the instructions of the boiler manufacturer. In absence of these consider the following:

- Cast-iron boilers, three pass flue boilers (with the first pass in the rear part): the blast tube must protrude no more than 100 mm into the combustion chamber.
- Pressurised boilers with flame reversal: in this case the blast tube must penetrate at least 50 - 100 mm into combustion chamber in respect to the tube bundle plate.
- The length of the blast tubes does not always allow this requirement to be met, and thus it may be necessary to use a suitably-sized spacer to move the burner backwards or to design a blast tube tha suites the utilisation (please, contact the manifacturer).

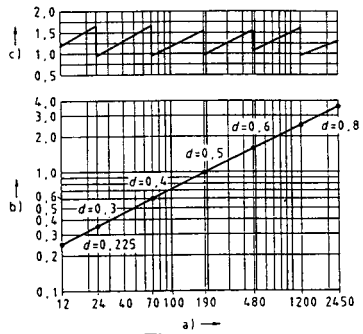

Fig. 4

Key

a) Heat output in kW

b) Lenght of the flame tube in meters

c) Flame tube firing intensity in MW/m^3

d) Combustion chamber diameter (m)

Fig. 4 - Firing intensity, diameter and lenght of the test flame tube as a function of the heat input in kW.

Burner model identification

Burners are identified by burner type and model. Burner model identification is described as follows.

Type	**HP20**	Model	**MG.**	**AB.**	**S.**	***.**	**A.**	**0.**	**25**
	(1)		(2)	(3)	(4)	(5)	(6)	(7)	(8)

(1) BURNER TYPE	**HP20 - HP30**
(2) FUEL	MG = Natural gas-Light LG = LPGLight oil BG = Biogas-Light oil
(3) OPERATION (Available versions)	AB = Double stage
(4) BLAST TUBE	S- = Standard L - Extended
(5) DESTINATION COUNTRY	* = see data plate
(6) BURNER VERSION	A- = Standard
(7) EQUIPMENT	0 = 2 gas valves 1 = 2 gas valves + gas proving system
(8) GAS CONNECTION	25 = Rp1 32 = Rp1$_{1/4}$

Specifications

BURNER TYPE		HP20	HP30	HP20	HP30	HP20	HP30
Output	min. - max. kW	85 - 230	65 - 350	85 - 230	65 - 350	85 - 230	65 - 350
Fuel		MG - Natural gas-Light oil		LG - LPG Light oil		BG = Biogas-Light oil	
Gas category		(see next paragraph)		$I_{3B/P}$		(see next paragraph)	
Gas rate	min.-max. min. - max. Stm³/h)	9 - 24,3	7 - 37	-	-	-	-
LPG rate	min.-max. min. - max. Stm³/h)	-	-	3,2 - 8,6	2,4 - 13,1	-	-
Biogas rate	min.-max. min. - max. Stm³/h)	-	-	-	-	13,3 - 36	10,2- 55
Gas pressure	min.- max. mbar	(see Note 2)					
Light oil rate	min.- max. kg/h	7,2 - 19,4	5,5 - 29,5	7,2 - 19,4	5,5 - 29,5	7,2 - 19,4	5,5 - 29,5
Oil viscosity		1,3 °E @20°C					
Power supply		230V 1N a.c. 50Hz					
Total power consumption	kW	0,83	0,83	0,83	0,83	0,83	0,83
Electric motor	kW	0,37	0,37	0,37	0,37	0,37	0,37
Pump motor	kW	0,18	0,18	0,18	0,18	0,18	0,18
Protection		IP40	IP40	IP40	IP40	IP40	IP40
Operation		Double stage					
Gas Train Rp1	Valves size / Gas connection	1” / Rp 1	-	1” / Rp 1	-	1” / Rp 1	-
Gas Train Rp1$_{1/4}$	Valves size / Gas connection	-	1”$_{1/4}$ / Rp 1$_{1/4}$	-	1”$_{1/4}$ / Rp 1$_{1/4}$	-	1”$_{1/4}$ / Rp 1$_{1/4}$
Operating temperature	°C	-10 ÷ +50					
Storage Temperature	°C	-20 ÷ +60					
Working service**		Internittent					

*** NOTE ON THE WORKING SERVICE: the control box automatically stops after 24h of continuous working. The control box immediately starts up, automatically.**

Note1:	**All gas flow rates are referred to Stm³/h (1013 mbar absolute pressure, 15 °C temperature) and are valid for G20 gas (net calorific value H_i = 34.02 MJ/Stm³).**
Note2:	**Maximum gas pressure = 360mbar (with Dungs MBDLE valves)** **Minimum gas pressure = see gas curves.**

Gas categories and countries of application

GAS CATEGORY	COUNTRY
I_{2H}	AT, ES, GR, SE, FI, IE, HU, IS, NO, CZ, DK, GB, IT, PT, CY, EE, LV, SI, MT, SK, BG, LT, RO, TR, CH
I_{2E}	LU, PL
$I_{2E(R)B}$	BE
I_{2EK}	NL
I_{2ELL}	DE
I_{2Er}	FR

Overall dimensions (mm)

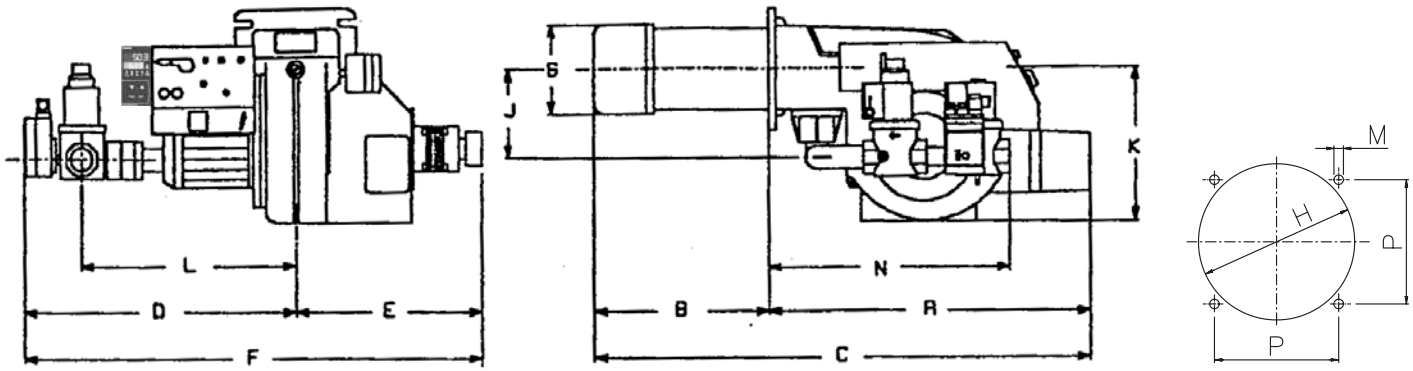

	A	B	BL	C	CL	D	E	F	G	K	J	L	N	H	P	M
HP20	555	173	258	728	813	510	320	830	126	290	178	360	370	151	155	M10
HP30	555	300	-	855	-	510	320	830	150	290	178	360	490	162	155	M10

Performance Curves

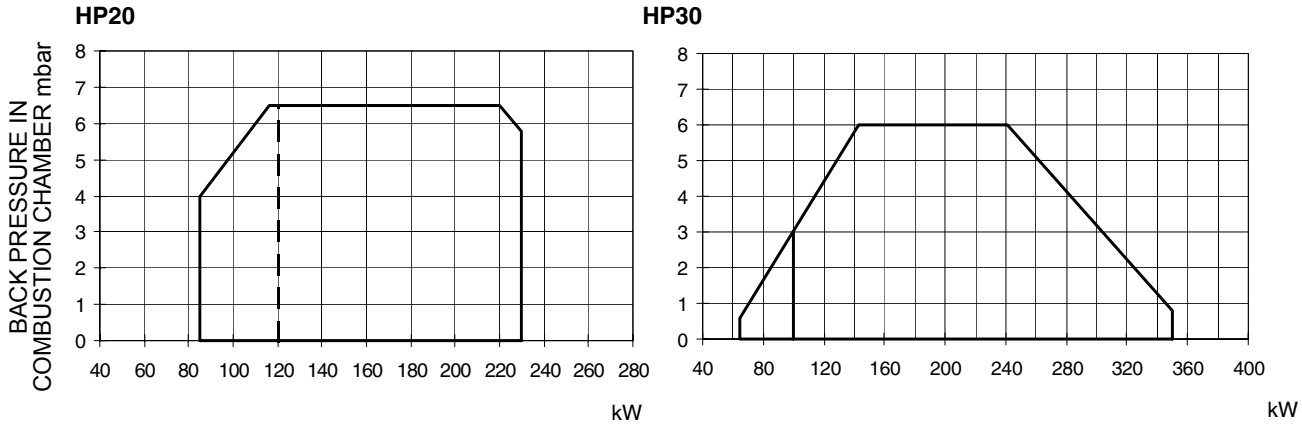

To get the input in kcal/h, multiply value in kW by 860.
Data are referred to standard conditions: atmospheric pressure at 1013mbar, ambient temperature at 15°C

Pressure in the network - gas rate curves

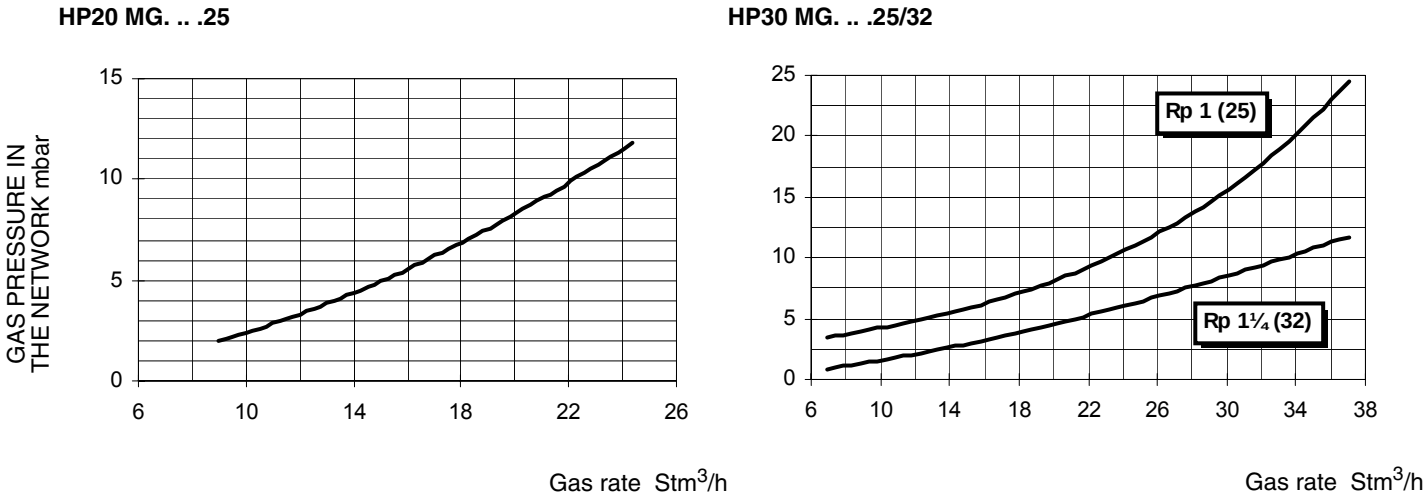

MOUNTINGS AND CONNECTIONS

Packing

Burners are despatched in cardboard packages whose dimensions **980mm x 820mm x 580mm (L x P x H)**

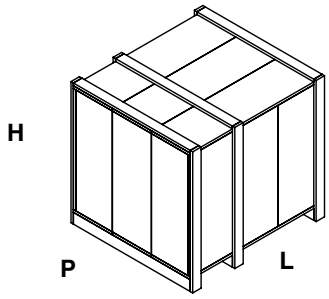

Packing cases of this kind are affected by humidity and are not suitable for stacking. The following are placed in each packing case:

1 burner with gas train detached;
1 gasket to be inserted between the burner and the boiler;
2 flexible oil pipes;
1 oil filter;
1 envelope containing this manual

To get rid of the burner's packing, follow the procedures laid down by current laws on disposal of materials

Fitting the burner to the boiler

To install the burner into the boiler, proceed as follows:

1 make a hole on the closing door of the combustion chamber as described on paragraph "Overall dimensions")
2 place the burner to the boiler: lift it up and handle it according to the procedure described on paragraph "Handling the burner";
3 place the 4 stud bolts (5) on the hole of the boiler's door, according to the burner's drilling plate described on paragraph "Overall dimensions";
4 fasten the 4 stud bolts;
5 place the gasket on the burner flange;
6 install the burner into the boiler;
7 fix the burner to the stud bolts, by means of the fixing nuts, according to the next picture.
8 After fitting the burner to the boiler, ensure that the gap between the blast tube and the refractory lining is sealed with appropriate insulating material (ceramic fibre cord or refractory cement).

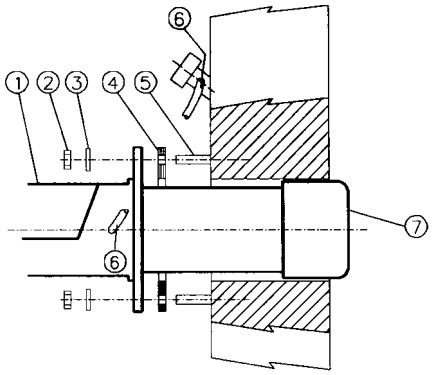

Keys

1 Burner
2 Fixing nut
3 Washer
4 Sealing gasket
5 Stud bolt
7 Blast tube

Gas train connections

The next diagrams show the components of the gas train included in the delivery and which must be fitted by the installer.The diagrams are in compliance with the current laws.

⚠	**ATTENTION:** BEFORE EXECUTING THE CONNECTIONS TO THE GAS PIPE NETWORK, BE SURE THAT THE MANUAL CUTOFF VALVES ARE CLOSED. READ CAREFULLY THE “WARNINGS” CHAPTER AT THE BEGINNING OF THIS MANUAL.

Gas train - 1 Gas train with valves group MB-DLE with built-in gas pressure governor + VPS504 gas proving system

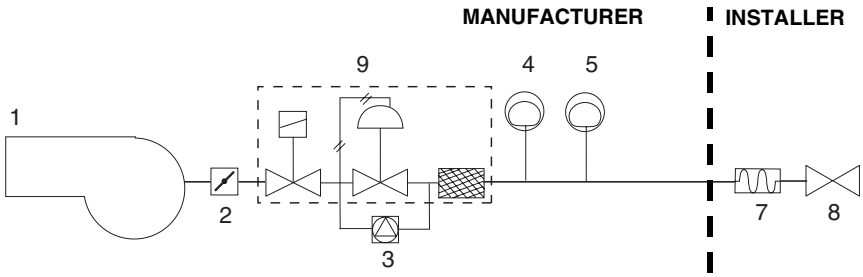

Key

1 Burner
2 Butterfly valve
3 Gas proving system (optional if output < 1200 kW)
4 Maximum gas pressure switch (optional)
5 Minimum gas pressure switch
6 Gas filter
7 Bellow joint
8 Manual cutoff valve
9 MB-DLE Valves group

Assembling the gas grain

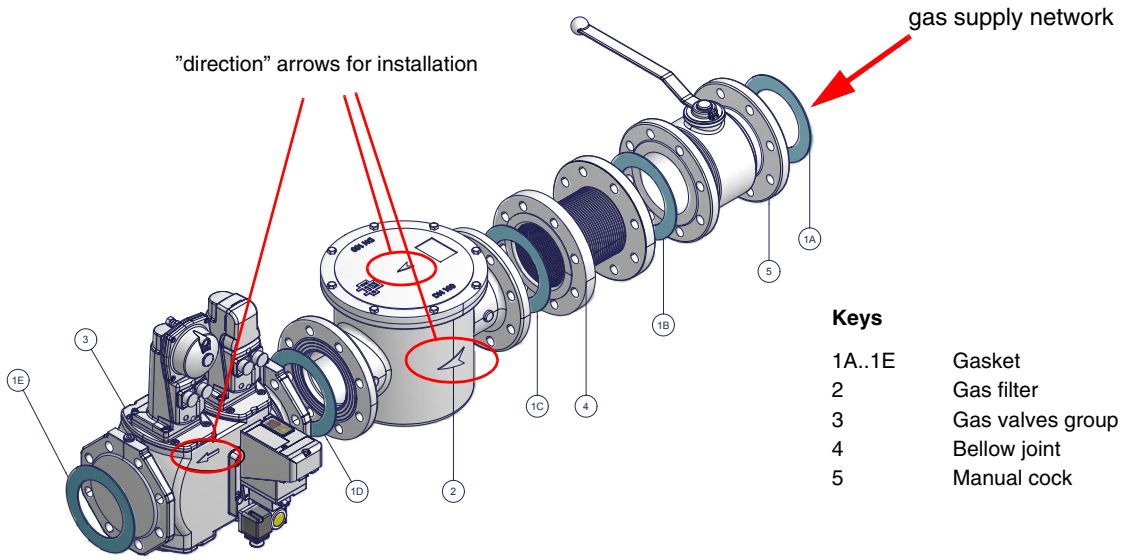

Keys

1A..1E	Gasket
2	Gas filter
3	Gas valves group
4	Bellow joint
5	Manual cock

Fig. 5 - Example of gas train

To mount the gas train, proceed as follows:

1-a) in case of threaded joints: use proper seals according to the gas used;

1-b) in case of flanged joints: place a gasket (no. 1A..1E - Fig. 5) between the elements

NOTE: the bellow joint, the manual cock and the gaskets are not part of the standard supply.

⚠	**ATTENTION:** once the gas train is mounted according to the diagram on Fig. 5, the gas proving test mus be performed, according to the procedure set by the laws in force.

The procedure of installation of the gas valves is showed in the next paragraph:

- threaded gas trains with Multibloc Dungs MB-DLE

MULTIBLOC DUNGS MB-DLE 405..412

Mounting

1. Mount flange onto tube lines: use appropriate sealing agent (see Fig. 8);
2. insert MB-DLE: note position of O rings (see Fig. 8);
3. tighten screws A, B, C and D (Fig. 6 - Fig. 7), accordind to the mounting positions (Fig. 9);
4. after installation, perform leakage and functional test;
5. disassembly in reverse order.

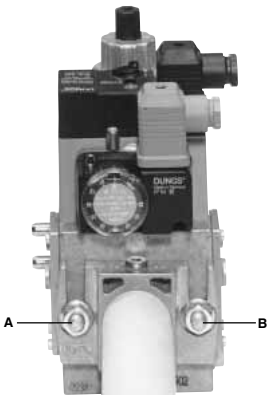

Fig. 6

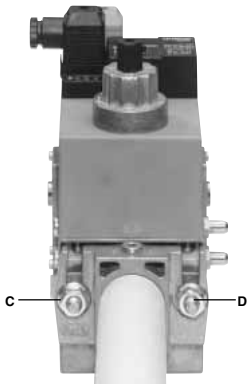

Fig. 7

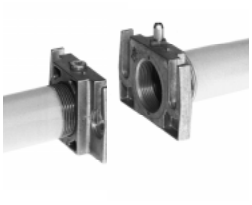

Fig. 8

MOUNTING POSITIONS

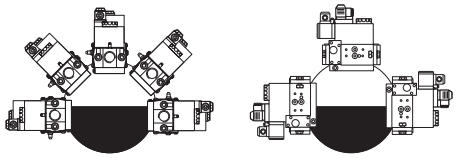

Fig. 9

Once the train is installed, connect electrically all its elements: gas valves group, pressure switches, gas proving system (option).

⚠	**ATTENTION:** once the gas train is mounted according to the diagram on Fig. 5, the gas proving test mus be performed, according to the procedure set by the laws in force.

Hydraulic diagrams for light oil supplying circuits

Fig. 10 - Gravity circuit

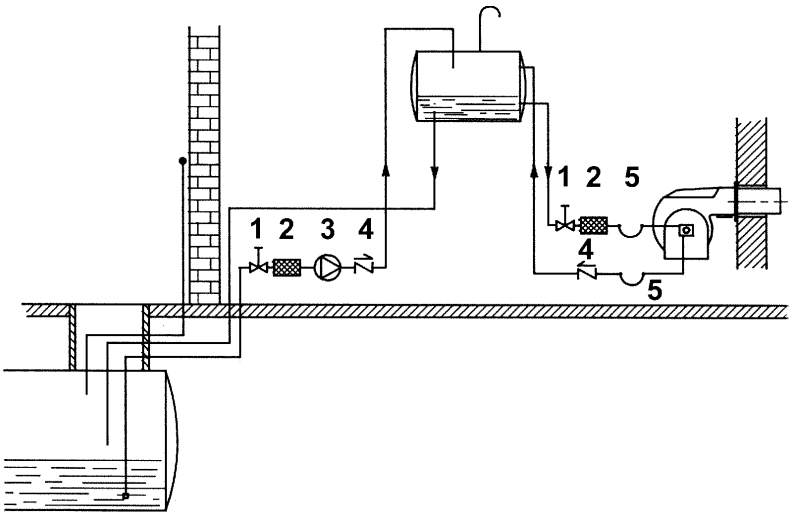

Fig. 11 - Ring circuit

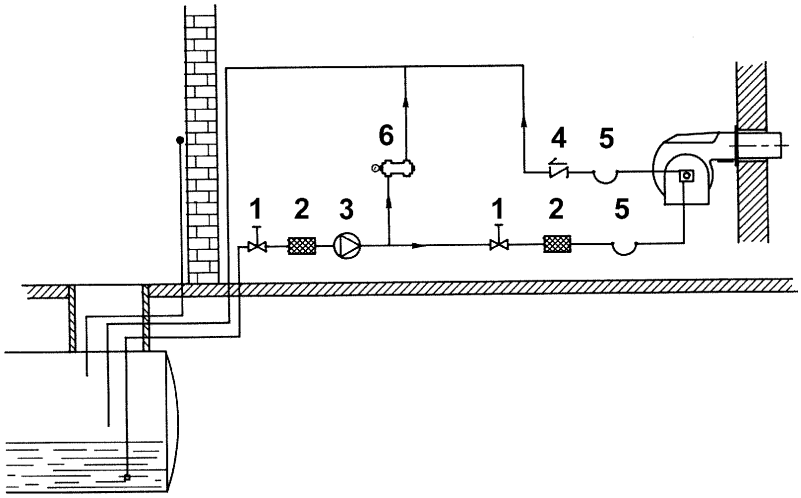

Fig. 12 - Suction circuit

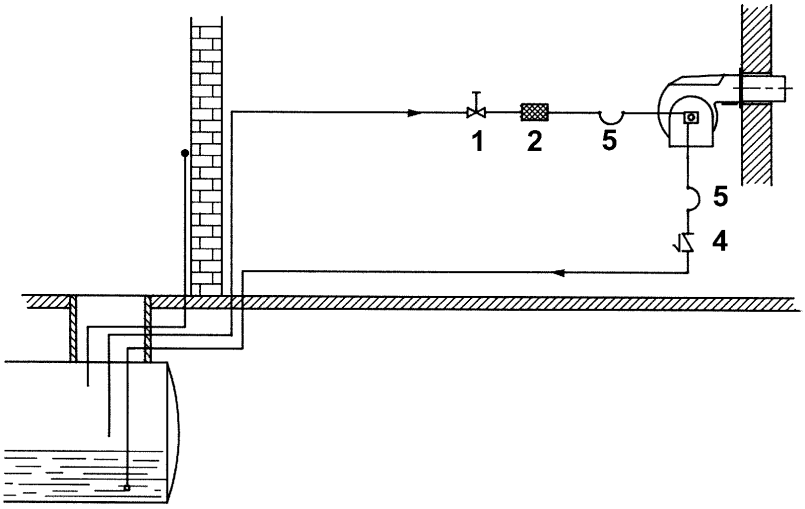

Key

1 Manual valve
2 Light oil filter
3 Light oil feeding pump
4 One way valve
5 Flexible hoses
6 Relief valve

NOTE: in plants where gravity or ring feed systems are provided, install an automatic interception device (see n. 4 - Fig.13).

Installation diagram of light oil pipes

⚠ **PLEASE READ CAREFULLY THE "WARNINGS" CHAPTER AT THE BEGINNING OF THIS MANUAL.**

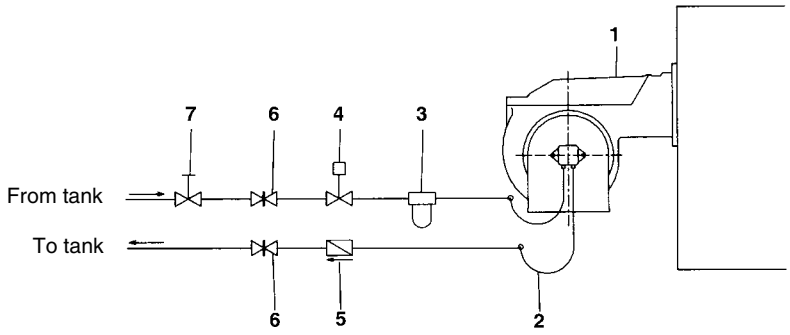

Fig. 13 - Double-pipe system

The burner is supplied with filter and flexible hoses, all the parts upstream the filter and downstream the return flexible hose, must be installed by the customer. As far as the hoses connection, see the related paragraph.

Key

1 Burner
2 Flexible hoses (fitted)
3 Light oil filter (fitted)
4 Automatic interceptor (*)
5 One-way valve (*)
6 Gate valve
7 Quick-closing gate-valve (outside the tank or boiler rooms)

(*) Only for installations with gravity, siphon or forced circulation feed systems. If the device installed is a solenoid valve, a timer must be installed to delay the valve closing.
The direct connection of the device without a timer may cause pump breaks.

The pumps that are used can be installed both into single-pipe and double-pipe systems.

Single-pipe system: a single pipe drives the oil from the tank to the pump's inlet. Then, from the pump, the pressurised oil is driven to the nozzle: a part comes out from the nozzle while the othe part goes back to the pump. In this system, the by-pass pulg, if provided, must be removed and the optional return port, on the pump's body, must be sealed by steel plug and washer.

Double-pipe system: as for the single pipe system, a pipe that connects the tank to the pump's inlet is used besides another pipe that connects the pum's return port to the tank, as well. The excess of oil goes back to the tank: this installation can be considered self-bleeding. If provided, the inside by-pass plug must be installed to avoid air and fuel passing through the pump.

Burners come out from the factory provided for double-stage systems. They can be suited for single-pipe system (recommended in the case of gravity feed) as decribed before.To change from a 1-pipe system to a 2-pipe-system, insert the by-pass plug **G** (as for ccw-rotation- referring to the pump shaft).

Caution: Changing the direction of rotation, all connections on top and side are reversed.

Bleed

Bleeding in two-pipe operation is automatic : it is assured by a bleed flat on the piston. In one-pipe operation, the plug of a pressure gauge port must be loosened until the air is evacuated from the system.

About the use of fuel pumps

- Make sure that the by-pass plug is not used in a single pipe installation, because the fuel unit will not function properly and damage to the pump and burner motor could result.
- Do not use fuel with additives to avoid the possible formation over time of compounds which may deposit between the gear teeth, thus obstructing them.
- After filling the tank, wait before starting the burner. This will give any suspended impurities time to deposit on the bottom of the tank, thus avoiding the possibility that they might be sucked into the pump.
- On initial commissioning a "dry" operation is foreseen for a considerable length of time (for example, when there is a long suction line to bleed). To avoid damages inject some lubrication oil into the vacuum inlet.
- Care must be taken when installing the pump not to force the pump shaft along its axis or laterally to avoid excessive wear on the joint, noise and overloading the gears.
- Pipes should not contain air pockets. Rapid attachment joint should therefore be avoided and threaded or mechanical seal junctions preferred. Junction threads, elbow joints and couplings should be sealed with removable sg component. The number of junctions should be kept to a minimum as they are a possible source of leakage.
- Do not use PTFE tape on the suction and return line pipes to avoid the possibility that particles enter circulation. These could deposit on the pump filter or the nozzle, reducing efficiency. Always use O-Rings or mechanical seal (copper or aluminium gaskets) junctions if possible.

- An external filter should always be installed in the suction line upstream of the fuel unit.

Light oil pumps

Pump Suntec AS47 A

Viscosity	2 ÷ 12 mm²/s (cSt)
Fuel temperature	0 ÷ 60 °C
Maximum inlet pressure	2 bar
Minimum inlet pressure	- 0.45 bar to avoid gasing
Maximum Return pressure	2 bar
Maximum speed	3600 rpm

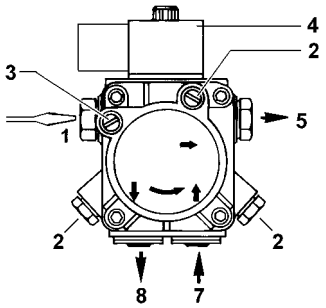

Suntec AT2 65A

Viscosity	2 ÷ 12 cSt
Oil temperature	60 °C max
Inlet maximum pressure	2 bar
Return maximum pressure	2 bar
Inlet minimum pressure	- 0.45 bar to avoid gasing
Rated speed	3600 rpm max.

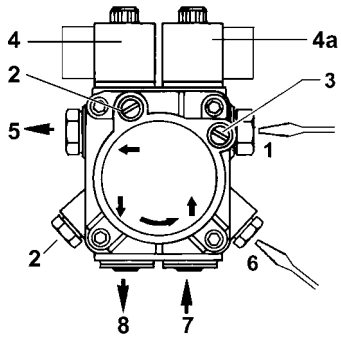

Key

1 Low pressure setting (I° stage)
2 Pressure gauge
3 Vacuum gauge
4 Lockout solenoid valve
4a High-low pressure solenoid valve
5 Nozzle
6 High pressure setting (II° stage)
7 Suction
8 Return (with inserted by-pass plug)

Connecting the light oil flexible hoses

To connect the flexible light oil hoses to the pump, proceed as follows, according to the pump provided:

1 remove the closing nuts **A** and **R** on the inlet and return connections of the pump;

2 screw the rotating nut of the two flexible hoses on the pump **being careful to avoid exchanging the inlet and return lines**: see the arrows marked on the pump that show the inlet and the return (see prevoius paragraph).

Suntec AT2 65

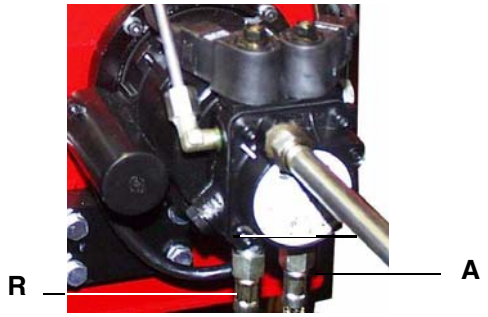

Electrical connections

⚠	**Respect the basic safety rules. make sure of the connection to the earthing system. do not reverse the phase and neutral connections. fit a differential thermal magnet switch adequate for connection to the mains.**
	ATTENTION: before executing the electrical connections, pay attention to turn the plant's switch to OFF and be sure that the burner's main switch is in 0 position (OFF) too. Read carefully the chapter "WARNINGS", and the "Electrical connections" section.

⚠	**WARNING: The burner is provided with a jumper between terminals 6 and 7; in the event of connecting the high/low flame thermostat remove this jumper before connecting the thermostat.**
	IMPORTANT: while connecting electric supply wires to burner's teminal block be sure that ground wire should be longer than phase and neutral ones.

⚠	**WARNING: if the cable that connects the thermostats and the control box should be longer than 3 meters, insert a sectioning relay following the attached electrical wiring diagram.**

To execute the electrical connections, proceed as follows:

1 remove the cover from the electrical board, unscrewing the fixing screws;
2 execute the electrical connections to the supply terminal board as shown in the following diagrams,
3 check the direction of the motor (see next pargraph)
4 refit the panel cover

As far as connections refer to the terminal block, showed below:

1 Connect the signal conductors from the boiler to the burner, as for the next elements (see pictures):
ST: thermostat/pressure switch series
TAB: High/low flame thermostat
2 Connect the signal conductors from the burner to the boiler, as for the next elements (see pictures)
LB: Burner's lockout signalling LED
LSPG: Gas proving system' lockout signalling LED

Burners with no printed circuit board

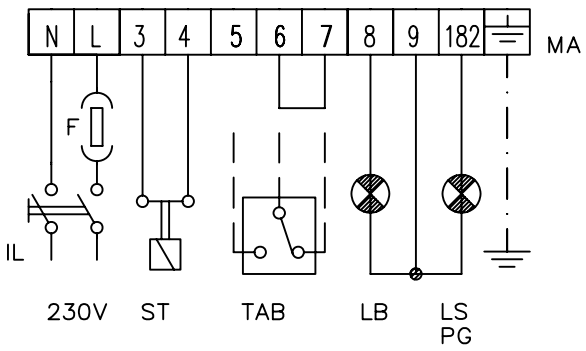

Burners with printed circuit board

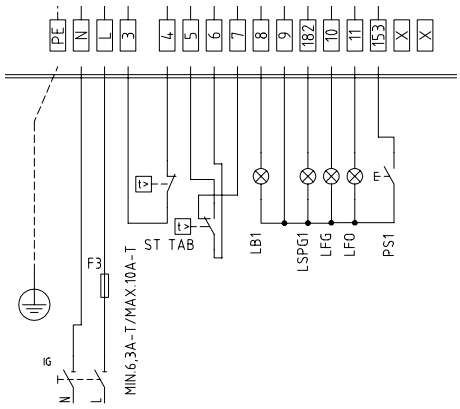

Fig. 14

Key

IL	Mains switch
LB/LB1	Burner lockout signalling lamp
LFG	Burner gas operation signalling lamp
LFO	Burner oil operation signalling lamp
LSPG/LSPG1	Gas leak on valves signalling lamp
MA	Burner power supply terminal board
PS1	Lock-out reset button
ST	Thermostats or pressure switches serie
TAB	High-Low flame thermostat

Power supply without neutral

If the power supply to the burner is 230V phase-phase (without the neutral wire), with the Siemens LGB2..., LMG2... or LME.. flame control device, between the terminal 2 on the board and the earth terminal, an RC Siemens RC466890660 filter must be inserted.

Key
C - Capacitor (22nF/250V)
R - Resistor (1Mohm)
(***) RC466890660 - RC Siemens filter
(Code: 2531003)

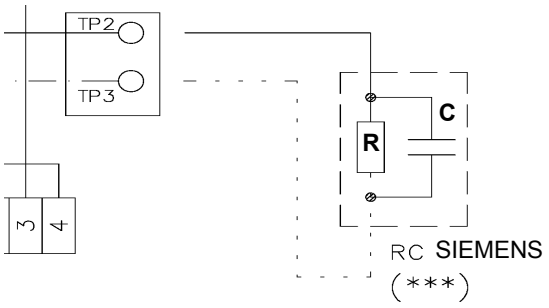

ADJUSTMENTS

Combustion head gas pressure curves depending on the flow rate

Curves are referred to pressure= 0mbar in the combustion head!

The curves referred to the gas pressure in the combustion head, depending on the gas flow rate, are referred to the burner properly adjusted (3% of residual O_2 in the flues and CO in the standard limits). During this stage, the combustion head, the gas butterfly valve and the servocontrol are at the maximum opening. Refer to Fig. 15, showing the correct way to measure the gas pressure, considering the values of pressure in combustion chamber, surveyed by means of the pressure gauge or taken from the boiler's Technical specifications.

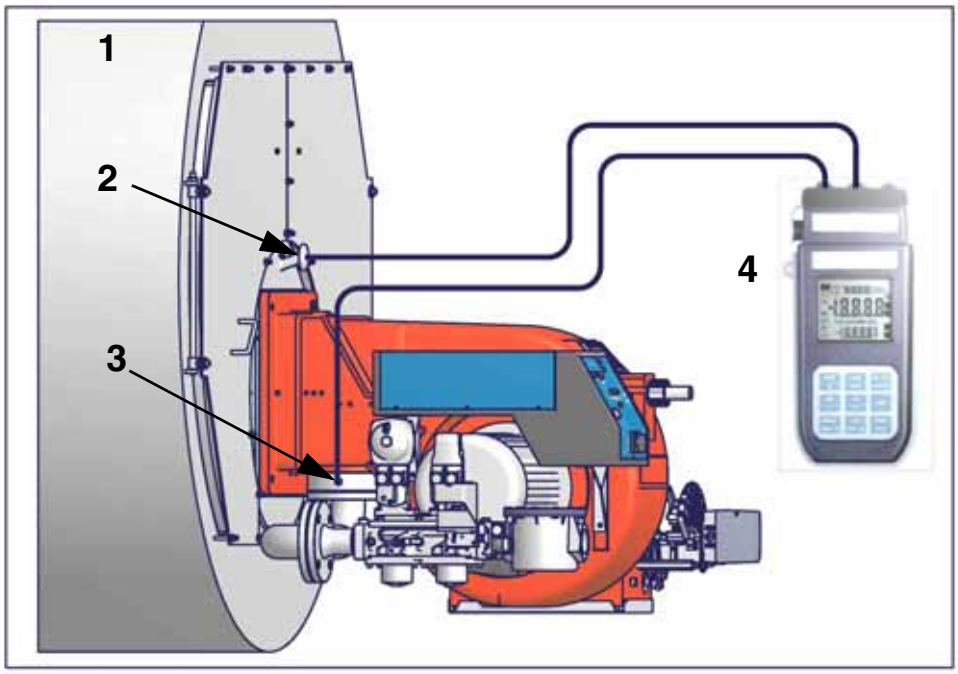

Fig. 14

Key
1 Boiler
2 Gas pressure outlet on the boiler
3 Gas pressure outlet on the butterfly valve
4 Differential pressure gauge

Measuring the gas pressure in the combustion head

In order to measure the pressure in the combustion head, insert the pressure gauge probes: one into the boiler's pressure outlet (Fig. 15-2) to get the pressure in the combustion chamber and the other one into the butterfly valve's pressure outlet of the burner (Fig. 15-3). On the basis of the measured differential pressure, it is possible to get the maximum flow rate: in the pressure - rate curves (showed on the next paragraph), it is easy to find out the burner's output in Stm3/h (quoted on the x axis) from the pressure measured in the combustion head (quoted on the y axis). The data obtained must be considered when adjusting the gas flow rate.

NOTE: THE PRESSURE-RATE CURVES ARE GIVEN AS INFORMATION ONLY; FOR A PROPER SETTING OF THE GAS RATE, PLEASE REFER TO THE GAS METER READING.

Pressure in combustion head - gas rate curves

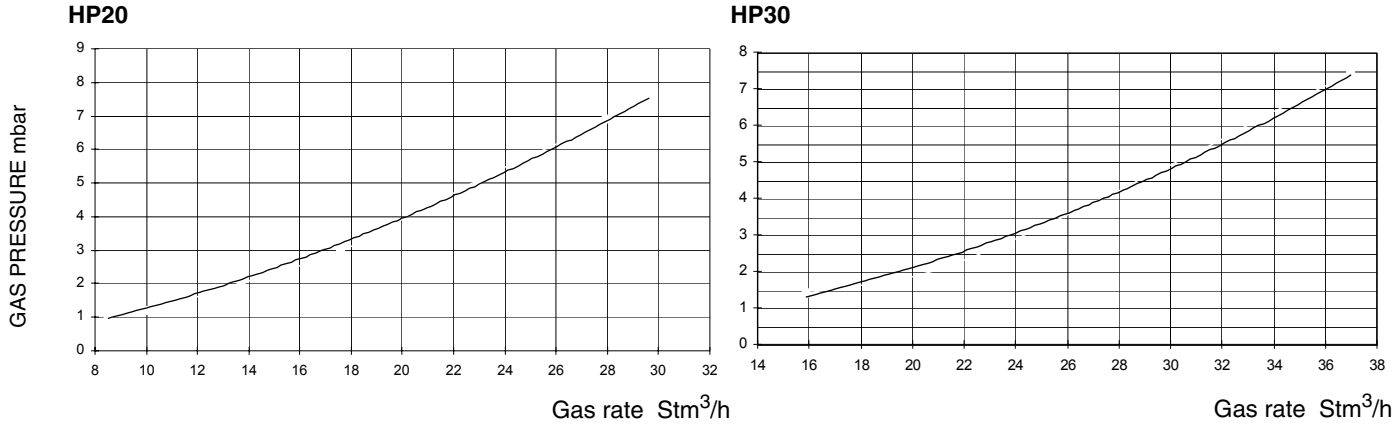

⚠	***ATTENTION:* before starting the burner up, be sure that the manual cutoff valves are open and check that the pressure upstream the gas train complies the value quoted on paragraph "Technical specifications". Be sure that the mains switch is closed.**
	.***ATTENTION:*** During commissioning operations, do not let the burner operate with insufficient air flow (danger of formation of carbon monoxide); if this should happen, make the gas decrease slowly until the normal combustion values are achieved.
	WARNING: NEVER LOOSE THE SEALED SCREWS! OTHERWISE, THE DEVICE WARRANTY WILL BE IMMEDIATELY INVALIDATE!

Gas Filter

The gas filters remove the dust particles that are present in the gas, and prevent the elements at risk (e.g.: burners, counters and regulators) from becoming rapidly blocked. The filter is normally installed upstream from all the control and on-off devices.

VPS504 Gas proving system

The VPS504 check the operation of the seal of the gas shut off valves. This check is carried out as soon as the boiler thermostat gives a start signal to the burner, creating, by means of the diaphragm pump inside it, a pressure in the test space of 20 mbar higher than the supply pressure.

When wishing to monitor the test, install a pressure gauge ranged to that of the pressure supply point PA.

If the test cycle is satisfactory, after a few seconds the consent light LC (yellow) comes on. In the opposite case the lockout light LB (red) comes on.

To restart it is necessary to reset the appliance by pressing the illuminated pushbutton LB.

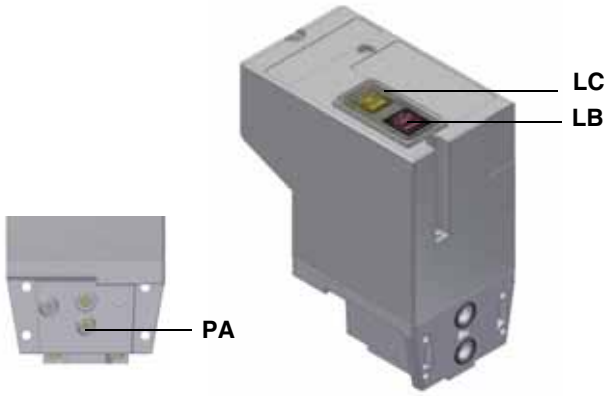

Fig. 15

⚠	**IMPORTANT! the combustion air excess must be adjusted according to the in the following chart:**

Recommended combustion parameters		
Fuel	Recommended (%) CO_2	Recommended (%) O_2
Natural gas	9 ÷ 10	3 ÷ 4.8
Light oil	11.5 ÷ 13	2.9 ÷ 4.9

Adjustments - brief description

- Check that the combustion parameters are in the suggested limits.
- Check the flow rate measuring it on the counter or, if it was not possible, verifying the combustion head pressure by means of a differential pressure gauge, as described on par. see "Measuring the gas pressure in the combustion head" on page 26.
- Adjust the combustion values in the high-flame stage.
- Set, now, the low flame output, acting on the low flame microswitch of the actuator in order to avoid the low flame output increasing too much or that the flues temperature gets too low to cause condensation in the chimney.

Start with the adjustment in the light oil operation and then proceed with the gas flow rate adjustment.

Adjustment procedure for light oil operation

The light oil flow rate is set by choosing a nozzle that suits the boiler/utilisation output and setting the delivery and return pressure values according to the ones quoted on the table below (as far as reading the pressure values, see next paragraphs).

Choice of the oil nozzle Single stage burners

nozzle Size	PUMP PRESSURE bar																	
	8	**9**	**10**	**11**	**12**	**13**	**14**	**15**	**16**	**17**	**18**	**19**	**20**	**21**	**22**	**23**	**24**	**25**
GPH	**kg/h**																	
2.00	**6.80**	7.21	7.60	7.97	8.32	8.66	8.99	9.30	9.61	9.91	10.19	10.47	10.74	11.01	11.27	11.52	**11.77**	12.01
2.25	**7.64**	8.11	8.55	8.96	9.36	9.74	10.11	10.47	10.81	11.14	11.47	11.78	12.09	12.39	12.68	12.96	**13.24**	13.51
2.50	**8.49**	9.01	9.50	9.96	10.40	10.83	11.24	11.63	12.01	12.38	12.74	13.09	13.43	13.76	14.09	14.40	**14.71**	15.02
2.75	**9.34**	9.91	10.45	10.96	11.44	11.91	12.36	12.79	13.21	13.62	14.01	14.40	14.77	15.14	15.49	15.84	**16.18**	16.52
3.00	**10.19**	10.81	11.40	11.95	12.48	12.99	13.48	13.96	14.41	14.86	15.29	15.71	16.12	16.51	16.90	17.28	**17.65**	18.02
3.50	**11.90**	12.62	13.30	13.95	14.57	15.17	15.74	16.29	16.83	17.84	17.85	18.34	18.81	19.28	19.73	20.17	**20.61**	21.03
4.00	**13.60**	14.42	15.20	15.94	16.65	17.33	17.99	18.62	19.23	19.82	20.40	20.95	21.50	22.03	22.55	23.06	**23.55**	24.04
4.50	**15.30**	16.22	17.10	17.94	18.73	19.50	20.24	20.95	21.63	22.30	22.95	23.57	24.19	24.78	25.37	25.94	**26.49**	27.04
5.00	**17.00**	18.03	19.00	19.93	20.82	21.67	22.48	23.27	24.04	24.78	25.49	26.19	26.87	27.54	28.19	28.82	**29.44**	30.05
5.50	**18.70**	19.83	20.90	21.92	22.90	23.83	24.73	25.60	26.44	27.25	28.04	28.81	29.56	30.29	31.00	31.70	**32.38**	33.05
6.00	**20.40**	21.63	22.80	23.92	24.98	26.00	26.98	27.93	28.84	29.73	30.59	31.43	32.25	33.04	33.82	34.58	**35.33**	36.05
6.50	**22.10**	23.44	23.70	25.91	27.06	28.17	29.23	30.26	31.25	32.21	33.14	34.05	34.94	35.80	36.64	37.46	**38.27**	39.06

Tab. 1 - Danfoss/Delavan nozzles

1 Once the air and gas flow rates are adjusted, turn the burner off, switch the **CM** switch to the heavy oil operation (OIL, on the burner control panel (see page 22).

2 start the burner up by means of the thermostat series;

3 bleed the air from the **M** pressure gauge port (Fig. 16) by loosing the cap without removing it, then release the contactor.

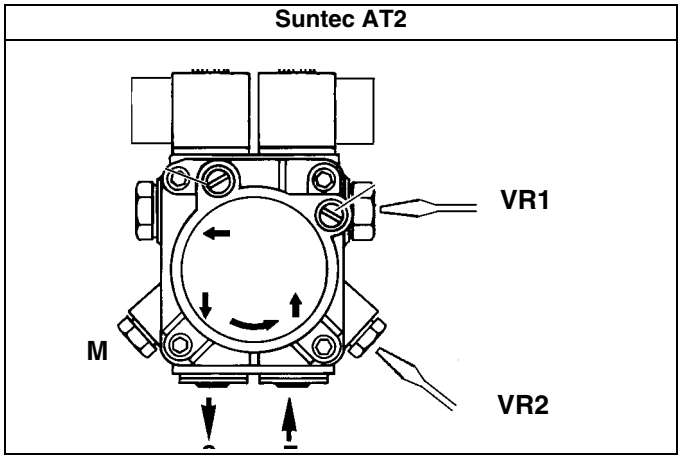

Fig. 16

4 always in the prepuring phase, adjust the pump pressure value by means of the VR1 screw (see picutre above), according to the low flame rate requested (i.e. 9-10bar); do not set the pressure lower than 8bar.

Caution: The nozzle flow rate at 8bar must be higher than the flow rate referred to the burner minimum output.

5 after the ignition phase, drive the burner to the high flame stage by means of the **TAB** thermostat; the second stage si achieved (high flame): by means of the **VR2** screw, adjust the pump pressure according to the flow rate required in the high flame stage (for example 24-25bar), without exceeding 25bar.

6 The MV cam nust set at least 5° higher than the low flame cam (ST1).

Berger STA12 B 3.41	Siemens SQN72
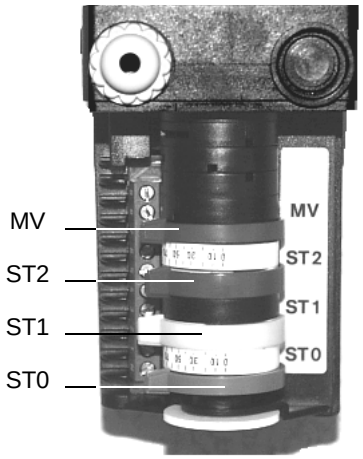	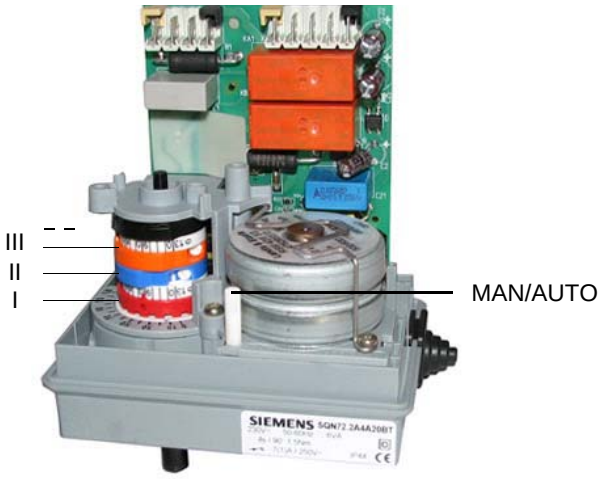
ST2 = High flame cam ST0 = Ignition position ST1 = Low flame	I = High flame cam II = Ignition position III = Low flame

ATTENTION! Berger actuator: cams can be moved manually. Siemens actuator: set the MAN/AUTO lever to MAN to move the cams, rememeber to set it to AUTO once the adjustment is accomplished.

7 To adjust the **air flow rate in the high flame stage**, loose the **RA** nut and screw **VRA** as to get the desired air flow rate: moving the rod **TR** towards the air damper shaft, the air damper opens and consequently the air flow rate increases, moving it far from the shaft the air damper closes and the air flow rate decreases.

Caution: once the procedure is perfomed, be sure that the blocking nut **RA** is fasten. Do not change the position of the air damper rods.

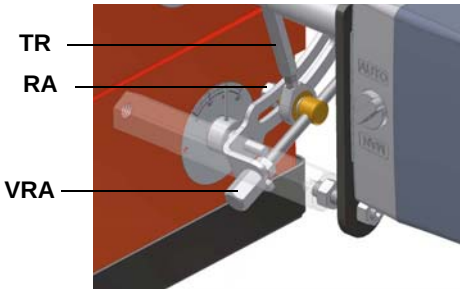

8 drive the burner to low flame by means of the **TAB** thermostat;

9 always checking the combustion values, adjust the low flame air flow rate by means of the actuator ST1 cam;

10 Turn the burner off and go on with the gas operation adjustment.

Adjustment procedure for gas operation

1 Set GAS fuel by means of the burner **CM** switch (it is placed on the burner control panel - see page 22)

Before starting the burner up, set the slow opening. To set the slow opening, remove cover **T**, reverse it upside down and use it as a tool to rotate screw **VR**. Clockwise rotation reduces start flow rate, anticlockwise rotation increases it. Do not use a screwdriver on the screw **VR**!**Note:** the screw **VSB** must be removed only in case of replacemente of the coil.

2 start the burner up by means of the thermostat series;

3 do not change the air flow rate adjustment set in the light oil operaion (see previous paragraph);

4 drive the burner to high flame by means fo the **TAB** thermostat;

5 acting on the pressure stabiliser of the valves group, adjust the **gas flow rate in the high flame stage** as to meet the values requested by the boiler/utilisation: the pressure governor is adjusted by operating the screw **VS** located under the cover **C**. By screwing down the pressure is increased and by unscrewing it is reduced. The valve is adjusted by means of the **RP** regulator after

slackening the locking screw **VB** by a number of turns. By unscrewing the regulator **RP** the valve opens, screwing the valve closes.

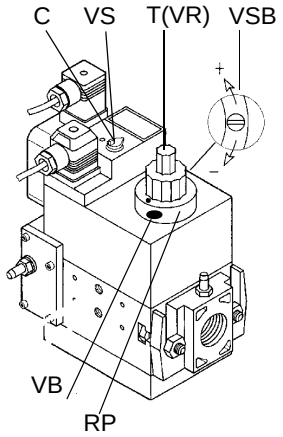

Fig. 18

Dungs Multibloc MB-DLE

6 Once the gas rate is adjusted at the maximum output stage, adjust the minimum output point (low flame).

7 drive the burner to low flame by means fo the **TAB** thermostat.

8 In order to adjust the gas flow rate slacken the nuts DB (see picture below) and adjust the opening angle of the gas throttle valve by rotating the rod TG (clockwise rotation increases gas flow, anticlockwise rotation decreases it). The slot on the throttle valve shaft shows the opening degree of the valve with respect of the horizontal axis (see picture below).

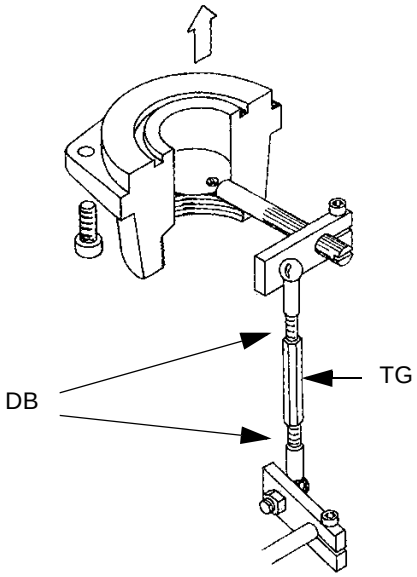

Gas throttle valve open

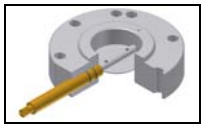

Gas throttle valve closed

N.B. At the end of settings, make sure the fastening nuts DB are fully tightened.

9 In the case that the flue gas temperature is not the one required, go back to the light oil operation and adjust the oil flow rate as to meet the flue gas temperature values reqested. Consequently adjust the air always observing the combustion analysis. Then go back to the gas operation and repeat only the gas adjustments (because the air rate has already been set in the light oil operation); always check the combustion values.In the case that the flue gas temperature is not the one required, go back to the light oil operation and adjust the oil flow rate as to meet the flue gas temperature values reqested. Consequently adjust the air always observing the combustion analysis. Then go back to the gas operation and repeat only the gas adjustments (because the air rate has already been set in the light oil operation); always check the combustion values.

10 Now adjust the pressure switches (see next par.).

Adjusting the combsution head

The burner is factory-set with the head in its MAX position (maximum output). To let the burner operate at a lower output, turn clockwise the **VRT** screw and move progressively the combustion head back towards the MIN position.

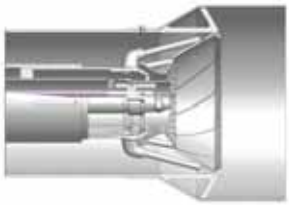

"MAX" head position

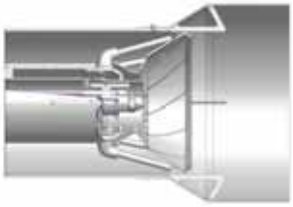

"MIN" head position

Attention! if it is necessary to change the head position, repeat the air and gas adjustments described above.

Calibration of air and gas pressure switches

The **air pressure switch** locks the control box if the air pressure is not the one requested. If it happens, unlock the burner by means of the control box unlock pushbutton, placed on the burner control panel.

The **gas pressure switches** check the pressure to avoid the burner operate when the pressure value is not in the requested pressure range.

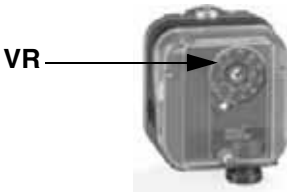

Calibration of air pressure switch

To calibrate the air pressure switch, proceed as follows:

- Remove the transparent plastic cap.
- Once air and fuel setting have been accomplished, startup the burner.
- During the pre-purge phase o the operation, turn slowly the adjusting ring nut **VR** in the clockwise direction (to increase the adjusting pressure) until the burner lockout, then read the value on the pressure switch scale and set it to a value reduced by 15%.
- Repeat the ignition cycle of the burner and check it runs properly.
- Refit the transparent plastic cover on the pressure switch.

Calibration of minimum gas pressure switch

As for the gas pressure switch calibration, proceed as follows:

- Be sure that the filter is clean.
- Remove the transparent plastic cap.
- While the burner is operating at the maximum output, test the gas pressure on the pressure port of the minimum gas pressure switch.
- Slowly close the manual cutoff valve (placed upstream the pressure switch, see gas train installation diagram), until the detected pressure is reduced by 50%. Pay attention that the CO value in the flue gas does not increase: if the CO values are higher than the limits laid down by law, slowly open the cutoff valve as to get values lower than these limits.
- Check that the burner is operating correctly.
- Clockwise turn the pressure switch adjusting ring nut (as to increase the pressure value) until the burner stops.
- Slowly fully open the manual cutoff valve.
- Refit the transparent plastic cover on the pressure switch.

Adjusting the high gas pressure switch (when provided)

To calibrate the high pressure switch, proceed as follows:

1 remove the plastic cover;
2 measure the gas pressure in the network, when flame is off;
3 by means of the adjusting ring nut **VR**, set the value read on step 2, increased by the 30%;
4 replace the plastic cover.

PART II: OPERATION

LIMITATIONS OF USE

THE BURNER IS AN APPLIANCE DESIGNED AND CONSTRUCTED TO OPERATE ONLY AFTER BEING CORRECTLY CONNECTED TO A HEAT GENERATOR (E.G. BOILER, HOT AIR GENERATOR, FURNACE, ETC.), ANY OTHER USE IS TO BE CONSIDERED IMPROPER AND THEREFORE DANGEROUS.

THE USER MUST GUARANTEE THE CORRECT FITTING OF THE APPLIANCE, ENTRUSTING THE INSTALLATION OF IT TO QUALIFIED PERSONNEL AND HAVING THE FIRST COMMISSIONING OF IT CARRIED OUT BY A SERVICE CENTRE AUTHORISED BY THE COMPANY MANUFACTURING THE BURNER.

A FUNDAMENTAL FACTOR IN THIS RESPECT IS THE ELECTRICAL CONNECTION TO THE GENERATOR'S CONTROL AND SAFETY UNITS (CONTROL THERMOSTAT, SAFETY, ETC.) WHICH GUARANTEES CORRECT AND SAFE FUNCTIONING OF THE BURNER.

THEREFORE, ANY OPERATION OF THE APPLIANCE MUST BE PREVENTED WHICH DEPARTS FROM THE INSTALLATION OPERATIONS OR WHICH HAPPENS AFTER TOTAL OR PARTIAL TAMPERING WITH THESE (E.G. DISCONNECTION, EVEN PARTIAL, OF THE ELECTRICAL LEADS, OPENING THE GENERATOR DOOR, DISMANTLING OF PART OF THE BURNER).

NEVER OPEN OR DISMANTLE ANY COMPONENT OF THE MACHINE.

OPERATE ONLY THE MAIN SWITCH, WHICH THROUGH ITS EASY ACCESSIBILITY AND RAPIDITY OF OPERATION ALSO FUNCTIONS AS AN EMERGENCY SWITCH, AND ON THE RESET BUTTON.

IN THE EVENT OF REPEATED LOCKOUTS, DO NOT PERSIST WITH THE RESET BUTTON AND CONTACT QUALIFIED PERSONNEL WHO WILL PROCEED TO ELIMINATE THE MALFUNCTION.

WARNING: DURING NORMAL OPERATION THE PARTS OF THE BURNER NEAREST TO THE GENERATOR (COUPLING FLANGE) CAN BECOME VERY HOT, AVOID TOUCHING THEM SO AS NOT TO GET BURNT.

OPERATION

⚠	***ATTENTION:*** **before starting the burner up, be sure that the manual cutoff valves are open and check that the pressure upstream the gas train complies the value quoted on paragraph "Technical specifications".**

- Choose the typer of fuel by turning the **A** switch, on the burner control panel.
  CAUTION: if the fuel chosen is light oil, be sure the cutoff valves on the feed and return pipes are open.
- Check the control box is not locked (signalling light **O**, on); if so, reset it by means of the pushbutton **C**.
- Check the series of thermostats and pressure switches turn the burner to on.

Gas operation

- Check the gas feeding pressure is sufficient (signalling lamp **G** on).

Burners provided with gas proving system: the gas proving system test begins; when the test is performed the proving system LED turns on. At the end of the test, the burner staring cycle begins: in case of leakage in a valve, the gas proving system stops the burner and the lamp **E** turns on. Reset it, by means of the reset pushbutton on the device, in burners with VPS504 (pushbutton **LB** in picture), or by the **D** pushbutton on the burner panel if this one is fitted with LDU11 proving system.

- Check the gas feeding pressure is sufficient (signalling lamp **G** on).

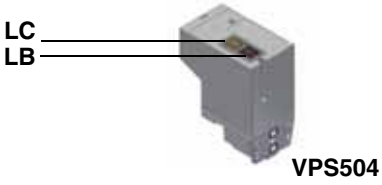

NOTE: if the burner is fitted with Dungs VPS504, the pre-purgue phase starts once the gas proving system is successfully performed. Since the pre-purgue phase must be carried out with the maximum air rate, the control box drives the actuator opening and when the maximum opening position is achieved, the pre-purge time counting starts.

- At the end of the pre-purge time, the actuator drives the complete closing (ignition with gas position) and, as this is achieved the

ignition transformer is energised (LED **L** is on).

Few seconds after the gas valves opening, the transformer is de-energised and lamp **L** turns off.

- The burner is now operating, meanwhile the actuator goes to the high flame position and, after some seconds, the two-stage operation begins; the burner is driven automatically to high flame or low flame, according to the plant requirements.

Operation in high or low flame is signalled by lamp **N** on the frontal panel.

Light oil operation

- Be sure the manual fuel selector is in the OIL position.
- The fan motor and the pump motor start and the pre-purge phase begins. The pre-purge phase must take place with the maximum air flow rate, that is why the control box enables the actuator opening; the pre-purge time counting starts when the maximum opening is reached.
- At the end of pre-purge time, the actuator moves to the ignition position for light oil and when the position is reache the ignition trasformer is energised (light C on - see control panel below). Few seconds after the oil valves opening, the ignition transformer is de-energised and light C turns to off.
- The burner lights and contemporarly the actuator drives to the high flame position; few seconds later the double-stage operation starts and the burner automatically sets to the high or low flame stage according to the plant reqests. The high/low flame stage is signalled by the A/B lights turning on/off on the control panel.

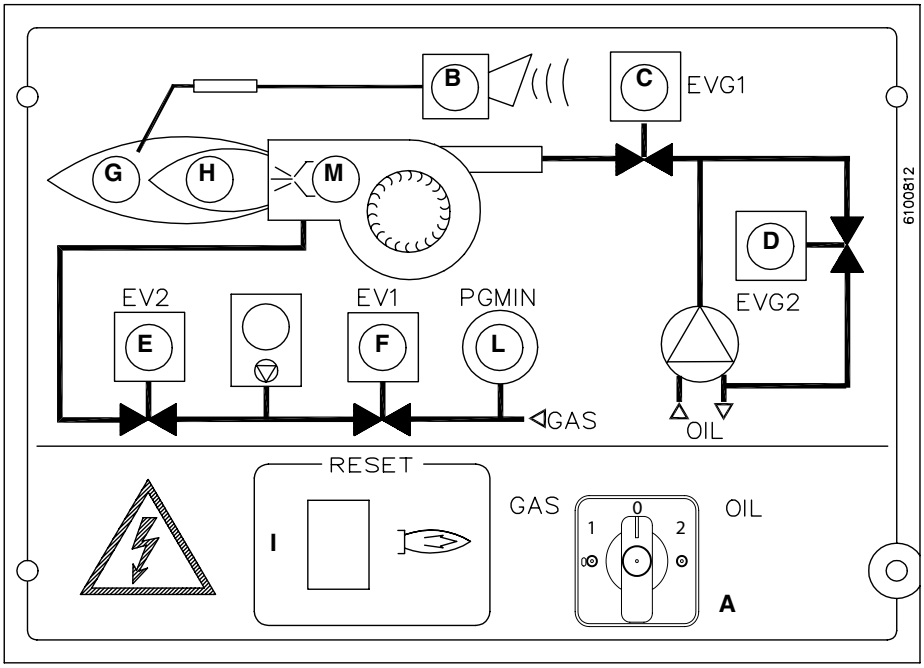

Fig. 18 - Burner control panel

Key

A	High flame mode indicating light
B	Low flame mode indicating light
C	Ignition transformer operation
CM	Main switch/operation mode Gas / Oil
D	Fan motor therma cutout intervention
E	Burner lockout indicating light
F	Stand-by mode indicating light
G	Gas valve EV1 operation
H	Gas valve EV2 operation
I	Gas pressure switch enabling signal
L	Oil solenoid valve operation
M	Gas proving system intervention
N	Control box reset pushbutton
O	Gas proving system reset pushbutton
P	Modulator

PART III: MAINTENANCE

At least once a year carry out the maintenance operations listed below. In the case of seasonal servicing, it is recommended to carry out the maintenance at the end of each heating season; in the case of continuous operation the maintenance is carried out every 6 months.

⚠	**WARNING: ALL OPERATIONS ON THE BURNER MUST BE CARRIED OUT WITH THE MAINS DISCONNECTED AND THE FUEL MANAUL CUTOFF VALVES CLOSED!**
	ATTENTION: READ CAREFULLY THE "WARNINGS" CHAPTER AT THE BEGINNIG OF THIS MANUAL.

ROUTINE MAINTENANCE

- Check and clean the gas filter cartridge, if necessary replace it (see next paragraghs);
- Check and clean the fuel filter cartdrige, replace if necessary.
- Check and clean the filter inside the light oil pump: filter must be thoroughly cleaned at least once in a season to ensure correct working of the fuel unit. To remove the filter, unscrew the four screws on the cover. When reassemble, make sure that the filter is mounted with the feet toward the pump body. If the gasket between cover and pump housing should be damaged, it must be replaced. An external filter should always be installed in the suction line upstream of the fuel unit.
- Check the fuel hoses for possible leaks.
- Remove, check and clean the combustion head (see page 25);
- Check ignition electrodes, clean, adjust and, if necessary, replace them (see page 26);
- Check and carefully clean the **UV** detector, replace it if necessary; if in doubt, check the detection current, once the burner starts up (see on page 27).
- Remove and clean the fuel nozzle ⚠ ***(Important:* cleaning must be performed using solvent, not metal tools!*).*** At the end of maintenance operations after the burner reassembly, light the flame and check its shape, replacing the nozzle whenever a questionable flame shape appears. Whenever the burner is used intensely, we recommend preventively replacing the nozzle at the start of each heating season.
- Clean and grease sliding and rotating parts.

⚠	**ATTENTION:** when servicing, if it was necessary to disassemble the gas train parts, remember to execute the gas proving test, once the gas train is reassembled, according to the procedure imposed by the law in force.

Light oil filter maintenance

For correct and proper servicing, proceed as follows:

1 cutoff the required pipe section;
2 unscrew the filter cup;
3 remove the filtering cartridge, wash it with gasoline; if necessary, replace it; check the tightening O-rings and replace them if necessary;
4 replace the cup and restore the pipe line.

Removing the filter in the MULTIBLOC DUNGS MB-DLE 405..412

- Check the filter at least once a year!
- Change the filter if the pressure difference between pressure connection 1 and 3 (Fig. 19-Fig. 20)is $\Delta p > 10$ mbar.
- Change the filter if the pressure difference between pressure connection 1 and 3 (Fig. 19-Fig. 20) is twice as high compared to the last check.

You can change the filter without removing the fitting.

1 Interrupt the gas supply closing the on-off valve.
2 Remove screws 1 ÷ 4 using the Allen key n. 3 and remove filter cover 5 in Fig. 21.
3 Remove the filter 6 and replace with a new one.
4 Replace filter cover 5 and tighten screws 1 ÷ 4 without using any force and fasten.
5 Perform leakage and functional test, $p_{max.}$ = 360 mbar.

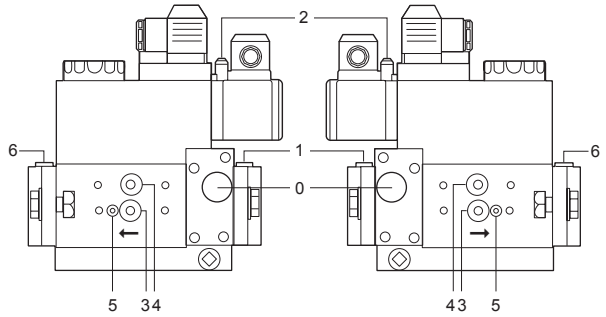

Fig. 19

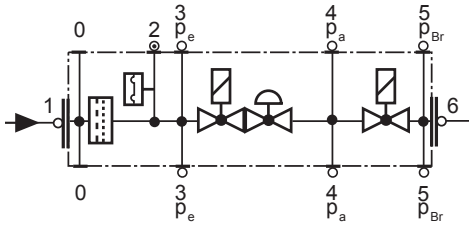

Fig. 20

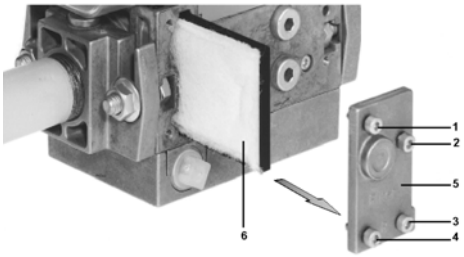

Fig. 21

Gas filter maintenance

⚠	**ATTENTION:** Before opening the filter, close the manual cutoff valve downstream the filter and bleed the gas; check that inside the filter there is no pressurised gas.

To clean or remove the filter, proceed as follows:

1 remove the cap unscrewing the fixing screws (A);
2 remove the filtering cartridge (B), clean it using water and soap, blow it with compressed air(or replace it, if necessary)
3 replace the cartridge in its proper position taking care to place it inbetween the guides as not to hamper the cap replacement;
4 be sure to replace the Or ring into its place (C) and replace the cover fastening by the proper screws (A).

A

B

C

Removing the combustion head

1 Remove the top **H**.
2 Disconnect the electrode cables **CE**.
3 Remove the **UV** detector out of its housing: disconnect electrode cables and the light oil flexible hoses.
4 Loosen the screws **V** holding the gas manifold **G**, loosen the two connectors **E** and remove the assembly as shown.

Note: to replace the combustion head, reverse the operations described above.

5 Clean the combustion head by means of a vacuum cleaner; scrape off the scale by means of a metallic brush.

Removing the combustion head

1 Remove the top **H**.
2 Disconnect the electrode cables **CE**.
3 Remove the **UV** detector out of its housing: disconnect electrode cables and the light oil flexible hoses.
4 Loosen the screws **V** holding the gas manifold **G**, loosen the two connectors **E** and remove the assembly as shown.

Note: to replace the combustion head, reverse the operations described above.

5 Clean the combustion head by means of a vacuum cleaner; scrape off the scale by means of a metallic brush.

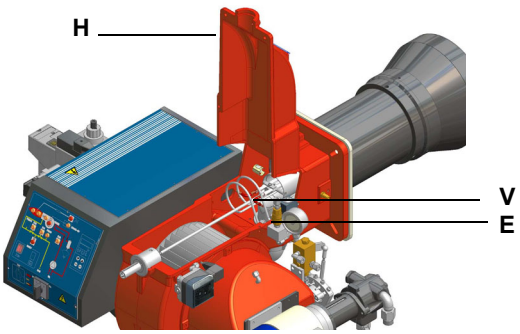

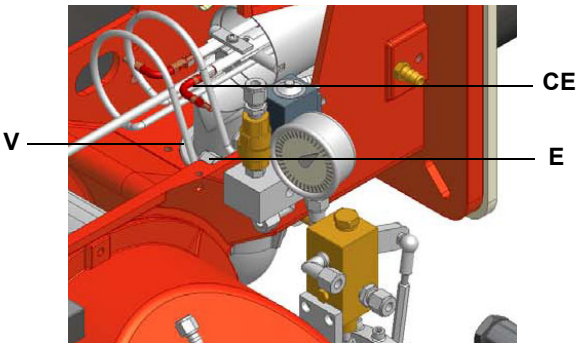

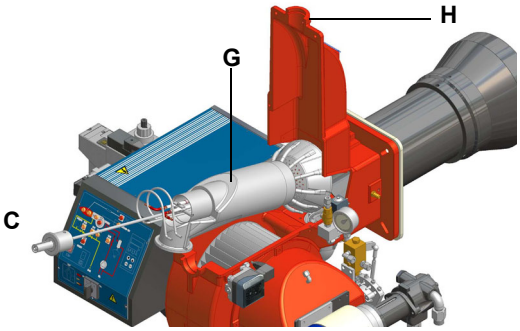

Adjusting the electrodes position
HP20

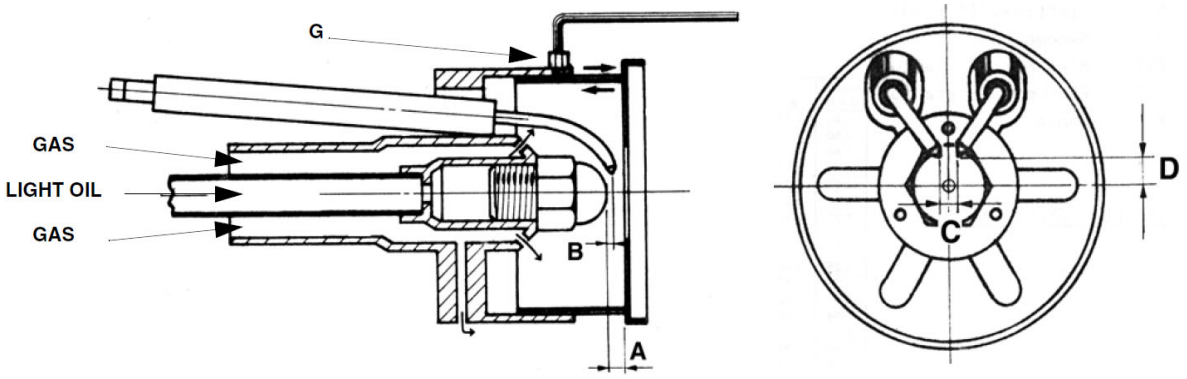

	NOZZLE	A	B	C	D
HP20	45°	7 ÷ 8	3 ÷ 4	3 ÷ 4	8 ÷ 9

Adjusting the electrodes position
HP30

Adjust the electrodes position, according to the measures (in mm) shown on the next picture.

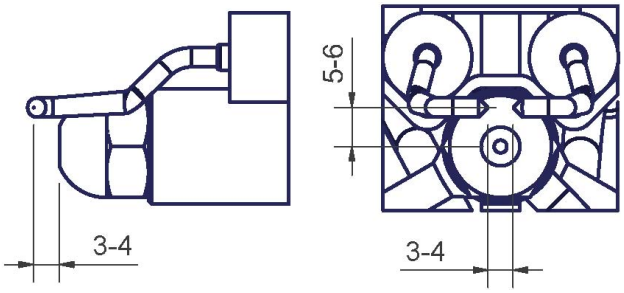

Fig. 20

Cleaning/replacing the electrodes

⚠	**ATTENTION:** avoid the electrodes to get in touch with metallic parts (blast tube, head, etc.), otherwise the boiler operation would be compromised. Check the electrodes position after any intervention on the combustion head.

To clean/replace the electrodes, proceed as follows:

1 remove the combustion head as described in the previous paragraph;
2 remove the electrodes ass.y and clean them;
3 in order to replace the electrodes, unscrew the **VE** fixing screws and remove them: place the new electrodes being careful to observe the measures in the previous paragraph; reassemble the electrodes and the combustion head following the reversed procedure.

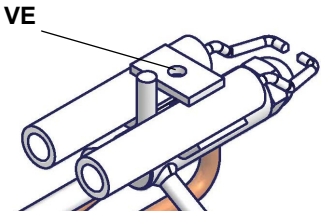

Cleaning and replacing the detection photocell

The photocell working life is about 10000 working hours (about 1 year), at max 50°C after which it must be replaced.

To clean/replace the detection photocell, proceed as follows:

1 Disconnect the system from the electrical power supply.
2 Shut off the fuel supply
3 remove the photocell from its slot (see next figure);
4 clean the bulbe if dirty, taking care not to touch it with bare hands;
5 if necessary, replace the bulb;
6 replace the photocell into its slot.

Checking the detection current

To check the detection current follow the diagram on Đèñ. 46. If the signal is less than the value indicated, check the position of the detection electrode or detector, the electrical contacts and, if necessary, replace the electrode or the detector.

Control box	Minimum detection signal
Siemens LME..	200µA (with UV detector)200

Keys

C	Electrolytic capacitor 100...470 µF; DC 10...25 V
M	Microammeter Ri max. 5000 ohm
QRA.	UV detector
rt	Red
sw	Black
br	Brown
gr	Grey
bl	Blue

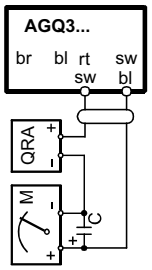

Seasonal stop

To stop the burner in the seasonal stop, proceed as follows:

1 turn the burner's main switch to 0 (Off position)
2 disconnect the power mains
3 close the fuel valve in the supply line.

Burner disposal

In case of disposal, follow the instructions according to the laws in force in your country about the "Disposal of materials".

TROUBLESHOOTING

CAUSE / FAULT	BURNER DOESN'T START	CONTINUE PRE-PURGUE	BURNER DOESN'T START AND LOCKS	BURNER DOESN'T START AND REPEATS THE CYCLE	BURNER STARTS AND REPEATS THE CYCLE	BURNER DOESN'T SWITCH TO HIGH FLAME	BURNER'S LOCKOUT DURING OPERATION	BURNER STOPS AND REPEATS CYCLE DURING OPERATION	BURNER'S LOCKOUT AFTER START	THE FLAME CONTROL DEV. REPEATS THE CYCLE WITHOUT GIVE CONSENT
MAIN SWITCH OPEN	●									
ABSENCE OF GAS	●									
MINIMUM GAS PRESSURE SWITCH FAULT OR BAD SETTING	●			●	●			●		
BOILER THERMOSTATS OPEN	●									
OVERLOAD TRIPPED INTERVENTION	●									
FUSES INTERVENTION	●									
AIR PRESSURE SWITCH FAULT OR BAD SETTING	●		●				●			●
DEFECTIVE CONTROL BOX	●	●	●				●			
DEFECTIVE AIR DAMPER ACTUATOR		●								
DEFECTIVE IGNITION TRANSFORMER			●							
IGNITION ELECTRODE WRONG POSITION			●							
THROTTLE VALVE BAD SETTING			●							
DEFECTIVE GAS GOVERNOR				●	●			●		
DEFECTIVE HI-LO FLAME THERMOSTAT						●				
ACTUATOR CAM BAD SETTING						●				
DETECTION ELECTRODE BAD POSITION OR DEFECTIVE DETECTION CIRCUIT							●		●	
REVERSED PHASE AND NEUTRAL CONNECTION									●	

SPARE PARTS

Desription	Code	
	HP20	HP30
CONTROL BOX	2020468	2020468
IGNITION ELECTRODE	2080212	2080219
OIL FILTER	2090025	2090025
GASKET	2110004	2110004
FAN WHEEL	2150006	2150006
AIR PRESSURE SWITCH	2160065	2160065
MINIMUM GAS PRESSURE SWITCH	2160076	2160076
IGNITION TRANSFORMER	2170106	2170106
FAN MOTOR	2180704	2180704
PUMPMOTOR	2180715	2180715
GAS VALVE GROUP - Rp1 - Dungs MB-DLE410	2190341	-
GAS VALVE GROUP - Rp1 1/4 - Dungs MB-DLE412	-	2190342
GAS PROVING SYSTEM	2191604	2191604
FLEXIBLE HOSE L=1000	2340001	2340001
ACTUATOR BERGER STA4.5	2480057	2480057
ACTUATOR BERGER STA6	2480042	2480042
UV PROBE	2510001	2510001
SIEMENS AGQ.. UV PROBE ADAPTER	2510114	2510114
MOTOR-PUMP COUPLING	2540055	-
PUMP SUNTEC AT2 65A	2590153	2590153
NOZZLE	2610002	2610002
STANDARD COMBUSTION HEAD	3060260	3090204
EXTENDED COMBUSTION HEAD	3060261	-
STANDARD BLAST TUBE	3090040	3091004
EXTENDED BLAST TUBE	3090041	-
STANDARD IGNITION CABLE	6050010	6050010
EXTENDED IGNITION CABLE	6050109	-
PRINTED CIRCUIT BOARD	6100551	6100551

WIRING DIAGRAMS

Complete key

AGQx.1A27-	UV probe adapter
CM	Operation selector 0) Off - 1) Gas - 2) Light oil
EV1	Gas solenoid valve, network side (or valves group)
EV2	Gas solenoid valve, burner side (or valves group)
EVG1	Light oil solenoid valve (1st stage)
EVG2	Light oil solenoid valve (2nd stage)
F	Fuses
F3/FU1	Line fuses
FC	UV probe
IG	Main switch
IL	Auxiliaries main switch
L	Phase
LAF	High flame operation signaling lamp
LB/LB1	Burner lockout signaling lamp
LBF	Low flame operation signaling lamp
LEV1	Opening of EV1 signaling lamp
LEV2	Opening of EV2 signaling lamp
LEVG	Opening of EVG signaling lamp
LFG	Gas operation signaling lamp
LFO	Light oil operation signaling lamp
LGB//LMG/LME 22.33-	SIEMENS control box
LPGMIN	Low gas pressure in the network signaling lamp
LS	Burner in stop position (STAND-BY) signaling lamp
LSPG/LSPG1	Gas valves leakage signaling lamp
LTA	Ignition transformer in operation signaling lamp
MA	Burner power supply terminal board
MC	Burner components terminal board
MP	Pump motor
MV	Fan motor
N	Neutral
PA	Air pressure switch
PGMAX	Maximum gas pressure switch (optional, if fitted remove the connection between terminals 156 e 158 in terminal board MC)
PGMIN	Minimum gas pressure switch
PS/PS1	Lock-out Reset button
R1/RL1	Auxiliary relais
SQN30/STA6B-	SIEMENS/BERGER actuator
ST	Series of thermostats or pressure switches
TA	Ignition transformer
TAB	Hi-Lo flame thermostat (if fitted remove the connection between terminals 6 and 7 on terminal board MA)
VPS504	DUNGS gas proving system (optional, if fitted remove the connection between 177 and 178 on terminal board MC)

Terminals Q13 and Q14 are contacts of a limit switch that stops the burner if the set parameters overcome the fixed differential.

ACTUATOR CAMS

SIEMENS SQL30	BERGER STM30	DESCRIPTION
Y1	I	High Flame
Y2	II	Stand-by and ignition
3	III	Low Flame (GAS)
6	V	Low Flame (OIL)

ATTENTION:

1 - Electrical supply 400V 50Hz 3N a.c.

2 - Don’t reverse phase with neutral

3 - Ensure to the burner a proper hearthing

WIRING DIAGRAM Cod. 04-559 Rev.1 - version without printed circuit board

WIRING DIAGRAM Cod. 18-0162 Rev.3 - version with printed circuit board

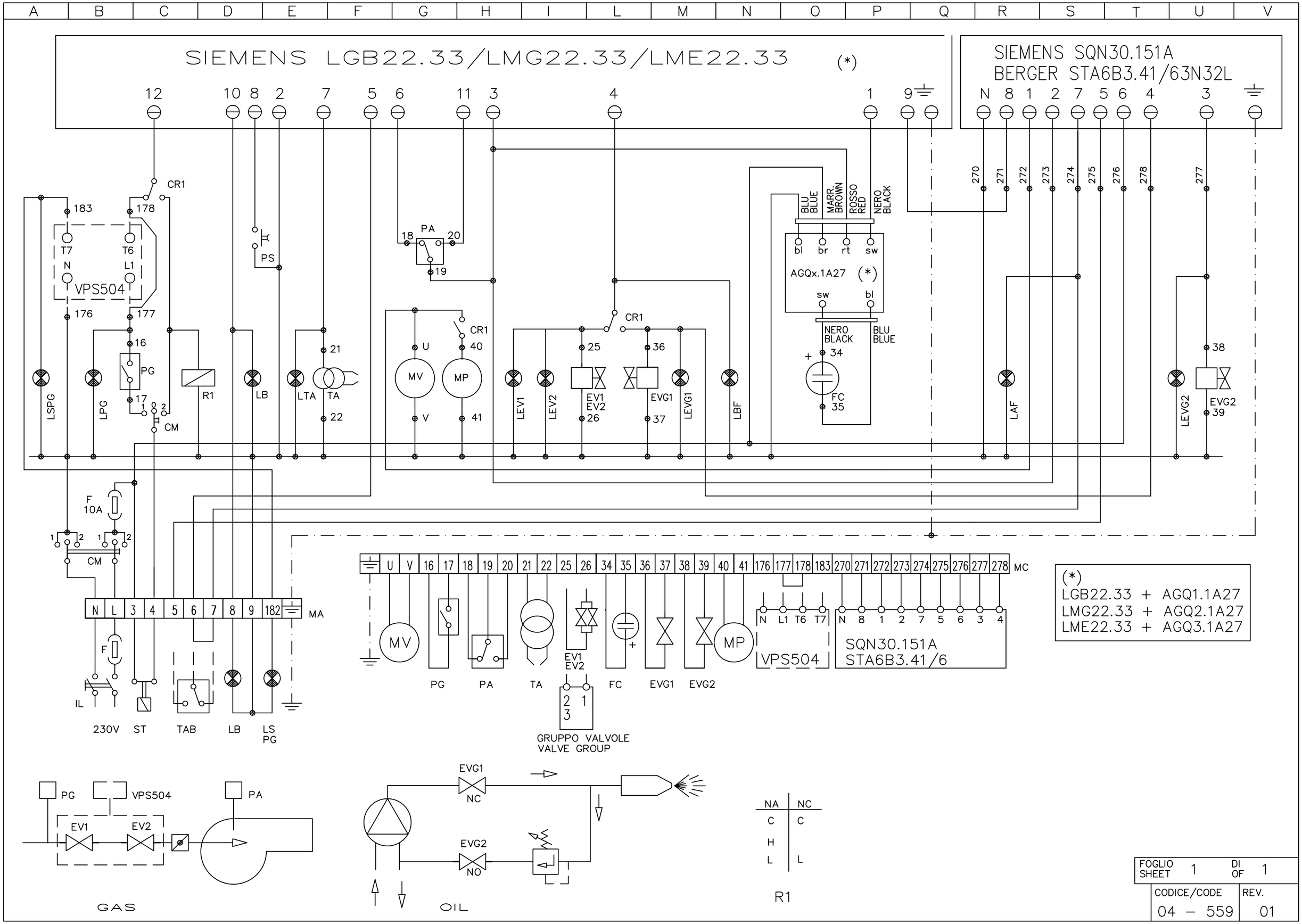
SIEMENS LGB22.33/LMG22.33/LME22.33 (*)
SIEMENS SQN30.151A
BERGER STA6B3.41/63N32L
VPS504
AGQx.1A27 (*)
SQN30.151A
STA6B3.41/6
GRUPPO VALVOLE
VALVE GROUP
230V
ST
TAB
LB
LS
PG
IL
GAS
OIL
NA NC
C C
H
L L
R1
(*)
LGB22.33 + AGQ1.1A27
LMG22.33 + AGQ2.1A27
LME22.33 + AGQ3.1A27
FOGLIO SHEET 1 DI OF 1
CODICE/CODE 04 – 559
REV. 01

L E G E N D A cod. 04-559 REV. 1

AGQx.1A27	-	Apparecchio ausiliario per sonda UV
CM	-	Commutatore di funzionamento 0) spento 1) gas 2) gasolio
CR1	-	Contatti relè ausiliari
EV1	-	Elettrovalvola gas lato rete (o gruppo valvole)
EV2	-	Elettrovalvola gas lato bruciatore (o gruppo valvole)
EVG1	-	Elettrovalvola gasolio I° stadio
EVG2	-	Elettrovalvola gasolio II° stage
F	-	Fusibili
FC	-	Sonda UV
IG	-	Interruttore generale
L	-	Fase
LAF	-	Lampada segnalazione bruciatore in alta fiamma
LB	-	Lampada segnalazione blocco bruciatore
LBF	-	Lampada segnalazione bruciatore in bassa fiamma
LEV1	-	Lampada segnalazione apertura elettrovalvola EV1
LEV2	-	Lampada segnalazione apertura elettrovalvola EV2
LEVG1	-	Lampada segnalazione apertura elettrovalvola gasolio EVG1
LEVG2	-	Lampada segnalazione apertura elettrovalvola gasolio EVG2
LGB//LMG/LME 22.33	-	Apparecchiatura SIEMENS controllo fiamma
LPG	-	Lampada segnalazione bassa pressione gas in rete
LSPG	-	Lampada segnalazione perdite valvole gas
LTA	-	Lampada segnalazione trasformatore di accensione
MA	-	Morsettiera di alimentazione bruciatore
MC	-	Morsettiera di collegamento componenti bruciatore
MP	-	Motore pompa
MV	-	Motore ventilatore
N	-	Neutro
PA	-	Pressostato aria comburente
PG	-	Pressostato gas di minima pressione
PS	-	Pulsante di sblocco
R1	-	Relè ausiliario
TAB	-	Termostato alta/bassa fiamma (dove previsto togliere il ponte tra i morsetti 6 e 7 nella morsettiera MA)
SQN30/STA6B	-	Servocomando SIEMENS o BERGER serranda aria
ST	-	Serie termostati o pressostati
TA	-	Trasformatore di accensione
VPS504	-	Apparecchiatura DUNGS controllo perdita valvole (optional se previsto togliere il ponte tra i morsetti 177 e 178 nella morsettiera MC)

CAMME SERVOCOMANDO

SIEMENS		BERGER	
SQN30.151		STA6B3.41	
I	-	ST2	Alta fiamma
II	-	ST0	Sosta
III	-	ST1	Bassa fiamma
V	-	MV	Apertura EVG2

ATTENZIONE :
1 - Alimentazione elettrica 230V 50Hz 2N a.c.
2 - Non invertire fase con neutro
3 - Assicurare una buona messa a terra del bruciatore

KEY cod. 04-559 REV. 1

AGQx.1A27	-	Auxiliary unit for UV probe
CM	-	Manual operation switch 0) off 1) gas 2) light oil
CR1	-	Relay contacts
EV1	-	Gas electro-valve upstream (or valve group)
EV2	-	Gas electro-valve downstream (or valve group)
EVG1	-	Light oil electro-valve I° stage
EVG2	-	Light oil electro-valve II° stage
F	-	Fuse
FC	-	UV flame detector
IG	-	Main switch
L	-	Phase
LAF	-	Burner in high flame indicator light
LB	-	Burner lockout indicator light
LBF	-	Burner in low flame indicator light
LEV1	-	Indicator light for opening of electro-valve EV1
LEV2	-	Indicator light for opening of electro-valve EV2
LEVG1	-	Indicator light for opening of electro-valve EVG1
LEVG2	-	Indicator light for opening of electro-valve EVG2
LGB/LMG/LME22.33	-	SIEMENS flame monitor device
LPG	-	Indicator light for presence of gas in the network
LSPG	-	Indicator light for leakage of valves
LTA	-	Ignition transformer indicator light
MA	-	Supply terminal block
MC	-	Terminal block for connection of burner components
MP	-	Pump motor
MV	-	Fan motor
N	-	Neutral
PA	-	Combustion air pressure switch
PG	-	Low gas pressure switch
PS	-	Lockout reset button
R1	-	Auxiliary relay
TAB	-	High/low thermostat (where supplied, remove the bridge between terminal 6 and 7 in terminal block MA)
SQN30/STA6B	-	Servo control SIEMENS or BERGER air damper
ST	-	Series thermostats or pressure switches
TA	-	Ignition transformer
VPS504	-	DUNGS valve leakage monitor device (where supplied, remove the bridge between
terminals		177 and 178 in terminal block MC)

SERVO CONTROL CAMS

SIEMENS		BERGER	
SQN30.151		STA6B3.41	
I	-	ST2	High flame
II	-	ST0	Start-up
III	-	ST1	Low flame
V	-	MV	Open EVG2

WARNING :
1 - Electrical supply 230V 50Hz 2N a.c.
2 - Do not reverset phase with neutral
3 - Ensure burner is properly earthed

VERSIONE ALTA-BASSA FIAMMA "AB"
"AB" HIGH/LOW FLAME VERSION

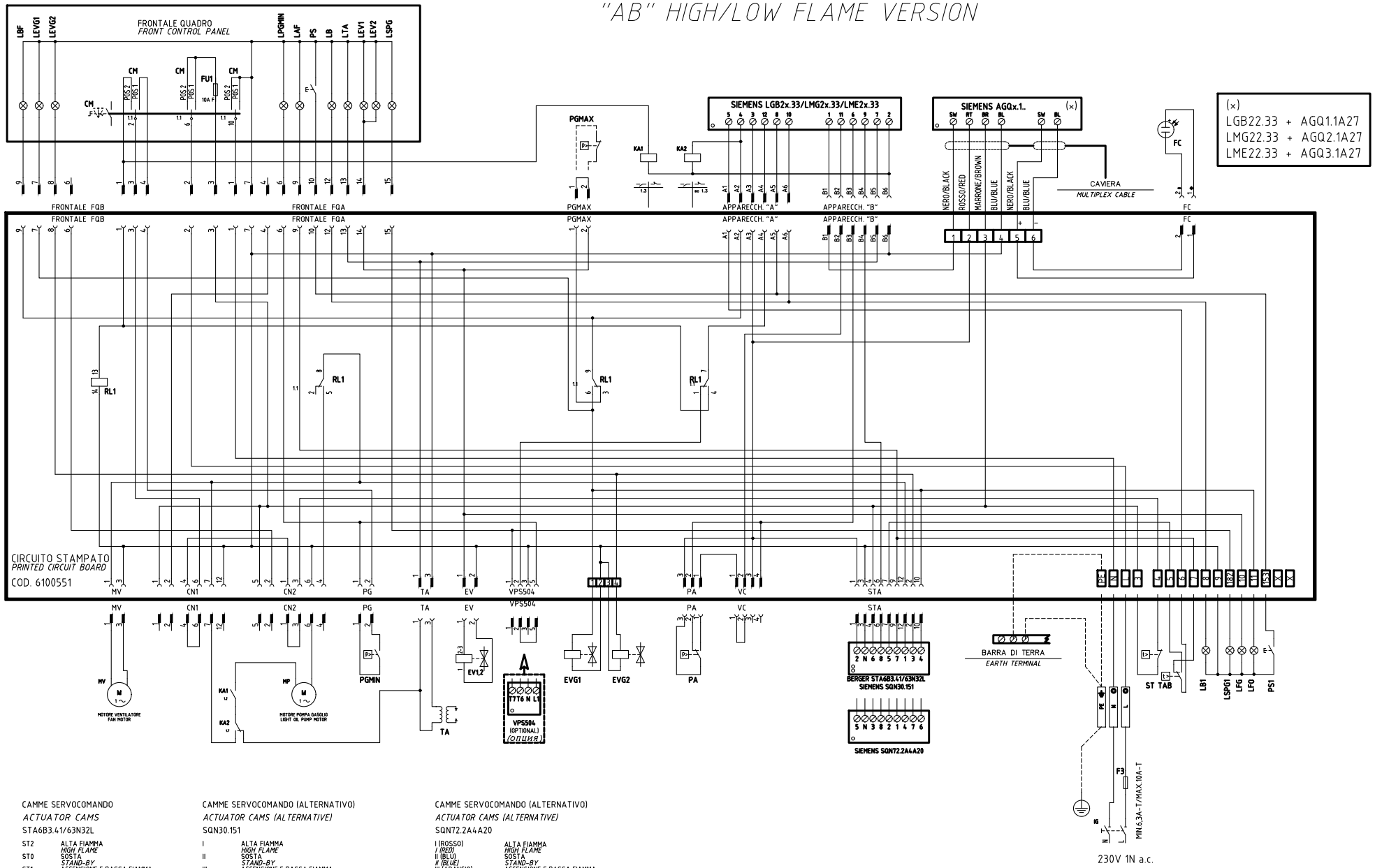

CAMME SERVOCOMANDO
ACTUATOR CAMS
STA6B3.41/63N32L

ST2	ALTA FIAMMA *HIGH FLAME*
ST0	SOSTA *STAND-BY*
ST1	ACCENSIONE E BASSA FIAMMA *IGNITION AND LOW FLAME*
MV	APERTURA EVG2 *OPEN EVG2*

CAMME SERVOCOMANDO (ALTERNATIVO)
ACTUATOR CAMS (ALTERNATIVE)
SQN30.151

I	ALTA FIAMMA *HIGH FLAME*
II	SOSTA *STAND-BY*
III	ACCENSIONE E BASSA FIAMMA *IGNITION AND LOW FLAME*
V	APERTURA EVG2 *OPEN EVG2*

CAMME SERVOCOMANDO (ALTERNATIVO)
ACTUATOR CAMS (ALTERNATIVE)
SQN72.2A4A20

I (ROSSO) *I (RED)*	ALTA FIAMMA *HIGH FLAME*
II (BLU) *II (BLUE)*	SOSTA *STAND-BY*
III (ARANCIO) *III (ORANGE)*	ACCENSIONE E BASSA FIAMMA *IGNITION AND LOW FLAME*
IV (NERO) *IV (BLACK)*	APERTURA EVG2 *OPEN EVG2*

Data	24/09/2008	PREC.	FOGLIO
Revisione	04	/	1
Dis. N.	18 – 0162	SEGUE	TOTALE
		2	2

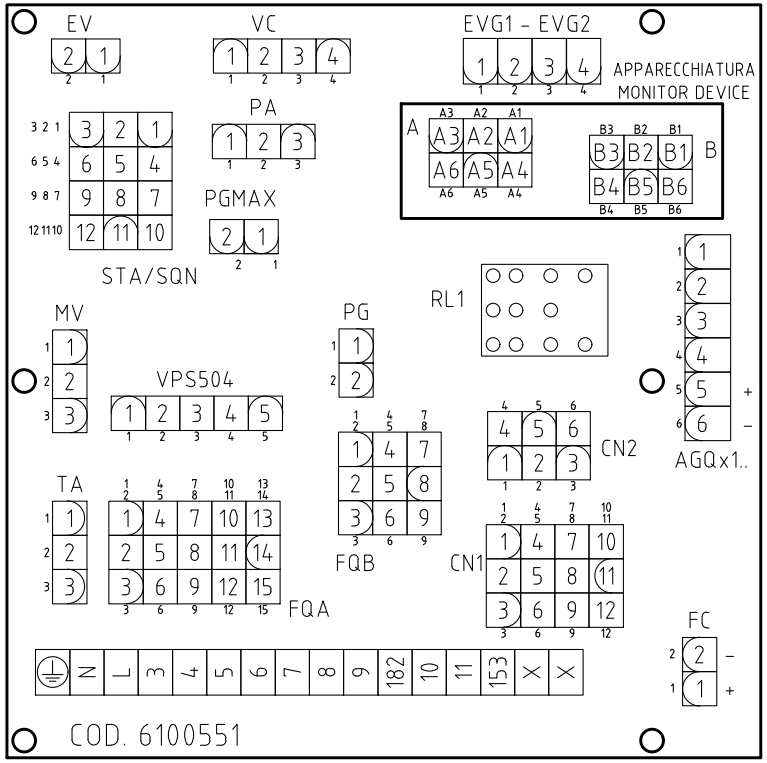

Sigla/Item	Funzione	Function
BERGER STA6B3.41/63N32L	SERVOCOMANDO SERRANDA ARIA	AIR DAMPER ACTUATOR
CM	SELETTORE MANUALE COMBUSTIBILE 1) GAS 0) OFF 2) GASOLIO	COMBUSTIBLE SELECTOR 1)GAS 0)OFF 2)LIGHT OIL
EV1,2	ELETTROVALVOLE GAS (O GRUPPO VALVOLE)	GAS ELECTRO-VALVES (OR VALVES GROUP)
EVG1	ELETTROVALVOLA GASOLIO	LIGHT OIL SOLENOID VALVE
EVG2	ELETTROVALVOLA GASOLIO	LIGHT OIL SOLENOID VALVE
F3	FUSIBILE DI LINEA	LINE FUSE
FC	SONDA UV RILEVAZIONE FIAMMA	UV FLAME DETECTOR
FU1	FUSIBILE DI LINEA	LINE FUSE
IG	INTERRUTTORE GENERALE	MAINS SWITCH
KA1	RELE' AUSILIARIO	AUXILIARY RELAY
KA2	RELE' AUSILIARIO	AUXILIARY RELAY
LAF	LAMPADA SEGNALAZIONE ALTA FIAMMA BRUCIATORE	BURNER IN HIGH FLAME INDICATOR LIGHT
LB	LAMPADA SEGNALAZIONE BLOCCO BRUCIATORE	INDICATOR LIGHT FOR BURNER LOCK-OUT
LB1	LAMPADA SEGNALAZIONE BLOCCO BRUCIATORE	INDICATOR LIGHT FOR BURNER LOCK-OUT
LBF	LAMPADA SEGNALAZIONE BASSA FIAMMA BRUCIATORE	BURNER IN LOW FLAME INDICATOR LIGHT
LEV1	LAMPADA SEGNALAZIONE APERTURA [EV1]	INDICATOR LIGHT FOR OPENING OF ELECTRO-VALVE [EV1]
LEV2	LAMPADA SEGNALAZIONE APERTURA [EV2]	INDICATOR LIGHT FOR OPENING OF ELECTRO-VALVE [EV2]
LEVG1	LAMPADA SEGNALAZIONE APERTURA [EVG1]	INDICATOR LIGHT FOR OPENING OF ELECTRO-VALVE [EVG1]
LEVG2	LAMPADA SEGNALAZIONE APERTURA [EVG2]	INDICATOR LIGHT FOR OPENING OF ELECTRO-VALVE [EVG2]
LFG	LAMPADA SEGNALAZIONE FUNZIONAMENTO BRUCIATORE A GAS	BURNER GAS OPERATION INDICATOR LIGHT
LFO	LAMPADA SEGNALAZIONE FUNZIONAMENTO BRUCIATORE A GASOLIO	BURNER LIGHT OIL OPERATION INDICATOR LIGHT
LPGMIN	LAMPADA SEGNALAZIONE PRESENZA GAS IN RETE	INDICATOR LIGHT FOR PRESENCE OF GAS IN THE NETWORK
LSPG	LAMPADA SEGNALAZIONE BLOCCO CONTROLLO TENUTA VALVOLE	INDICATOR LIGHT FOR LEAKAGE OF VALVES
LSPG1	LAMPADA SEGNALAZIONE BLOCCO CONTROLLO TENUTA VALVOLE	INDICATOR LIGHT FOR LEAKAGE OF VALVES
LTA	LAMPADA SEGNALAZIONE TRASFORMATORE DI ACCENSIONE	IGNITION TRANSFORMER INDICATOR LIGHT
MP	MOTORE POMPA GASOLIO	LIGHT OIL PUMP MOTOR
MV	MOTORE VENTILATORE	FAN MOTOR
PA	PRESSOSTATO ARIA	AIR PRESSURE SWITCH
PGMAX	PRESSOSTATO GAS DI MASSIMA PRESSIONE (OPTIONAL)	MAXIMUM PRESSURE GAS SWITCH (OPTIONAL)
PGMIN	PRESSOSTATO GAS DI MINIMA PRESSIONE	MINIMUM GAS PRESSURE SWITCH
PS	PULSANTE SBLOCCO FIAMMA	LOCK-OUT RESET BUTTON
PS1	PULSANTE SBLOCCO FIAMMA	LOCK-OUT RESET BUTTON
RL1	RELE' AUSILIARIO	AUXILIARY RELAY
SIEMENS AGQx.1..	ADATTATORE PER SONDA UV RILEVAZIONE FIAMMA	ADAPTER FOR UV FLAME DETECTOR
SIEMENS LGB2x.33/LMG2x.33/LME2x.33	APPARECCHIATURA CONTROLLO FIAMMA	CONTROL BOX
SIEMENS SQN30.151	SERVOCOMANDO SERRANDA ARIA (ALTERNATIVO)	AIR DAMPER ACTUATOR (ALTERNATIVE)
SIEMENS SQN72.2A4A20	SERVOCOMANDO SERRANDA ARIA (ALTERNATIVO)	AIR DAMPER ACTUATOR (ALTERNATIVE)
ST	SERIE TERMOSTATI/PRESSOSTATI	SERIES OF THERMOSTATS OR PRESSURE SWITCHES
TA	TRASFORMATORE DI ACCENSIONE	IGNITION TRANSFORMER
TAB	TERMOSTATO/PRESSOSTATO ALTA-BASSA FIAMMA	HIGH-LOW THERMOSTAT/PRESSURE SWITCHES
VPS504	CONTROLLO DI TENUTA VALVOLE GAS (OPTIONAL)	GAS PROVING SYSTEM (OPTIONAL)

Data	24/09/2008	PREC.	FOGLIO
Revisione	04	1	2
Dis. N.	18 – 0162	SEGUE	TOTALE
		/	2

VERSIONE ALTA-BASSA FIAMMA / PROGRESSIVO "PR" CON RELE' "KAB" DI SEZIONAMENTO

"PR" HIGH-LOW / PROGRESSIVE VERSION WITH "KAB" RELAY OF DISCONNECTED

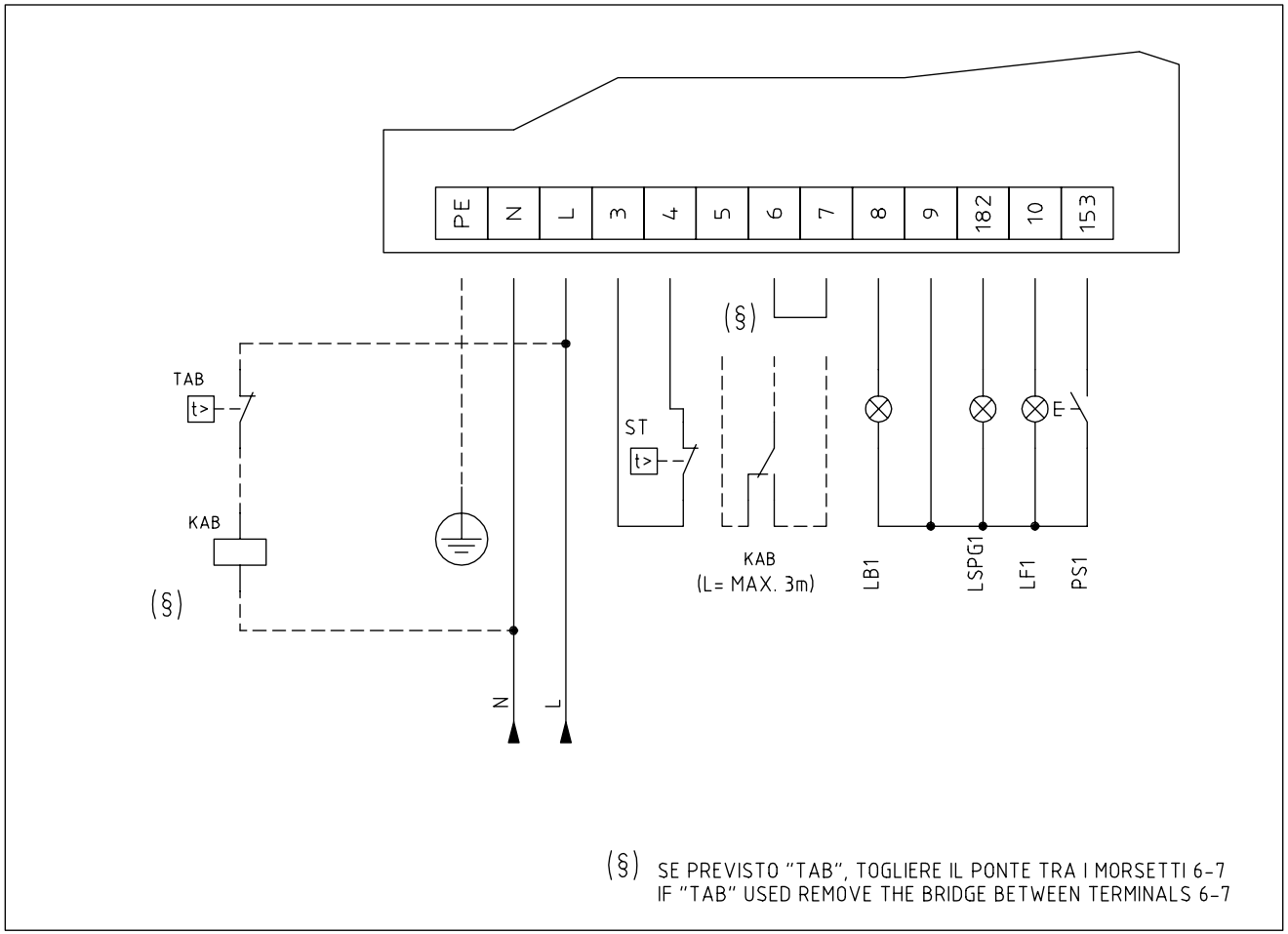

(§) SE PREVISTO "TAB", TOGLIERE IL PONTE TRA I MORSETTI 6-7
IF "TAB" USED REMOVE THE BRIDGE BETWEEN TERMINALS 6-7

Data 26/06/2008		PREC. /	FOGLIO 1
Revisione 00			
Dis. N. TAB_2		SEGUE 2	TOTALE 1

0	1	2	3	4	5	6	7	8	9

SIGLA/ITEM	FUNZIONE	FUNCTION
KAB	RELE' AUSILIARIO	AUXILIARY RELAY
LB1	LAMPADA SEGNALAZIONE BLOCCO BRUCIATORE	INDICATOR LIGHT FOR BURNER LOCK-OUT
LF1	LAMPADA SEGNALAZIONE FUNZIONAMENTO BRUCIATORE	INDICATOR LIGHT BURNER OPERATION
LSPG1	LAMPADA SEGNALAZIONE BLOCCO CONTROLLO TENUTA VALVOLE	INDICATOR LIGHT FOR LEAKAGE OF VALVES
PS1	PULSANTE SBLOCCO FIAMMA	LOCK-OUT RESET BUTTON
ST	SERIE TERMOSTATI/PRESSOSTATI	SERIES OF THERMOSTATS OR PRESSURE SWITCHES
TAB	TERMOSTATO/PRESSOSTATO ALTA-BASSA FIAMMA	HIGH-LOW THERMOSTAT/PRESSURE SWITCHES

Data 26/06/2008		PREC. 1	FOGLIO 2
Revisione 00			
Dis. N. TAB_2		SEGUE /	TOTALE 1

APPENDIX: COMPONENTS CHARACTERISTICS

SIEMENS LME11/21/22 CONTROL BOX

The series of equipment LME.. is used for the starup and supervisione of 1- or 2- stage gas burners. The series LME..is interchangeable with the series LGB.. and LMG.., all diagrams and accessories are interchangeable, the main features are:

- Indications of error codes by a signalling multicolor LED in the lockout reset button;
- Programmer fix times for the digital management of signals.

Comparative table

LGB Series	LMG Series	LME Series
---	LMG 25.33	LME 11.33
LGB 21.33	LMG 21.33	LME 21.33
LGB 22.33	LMG 22.33	LME 22.33

Preconditions for burner startup

- Burner control must be reset
- All contacts in the line are closed, request for heat
- No undervoltage
- Air pressure switch LP must be in its “no-load” position
- Fan motor or AGK25 is closed
- Flame detector is darkened and there is no extraneous light

Undervoltage

Safety shutdown from the operating position takes place should mains voltage drop below about AC 175 V (at UN = AC 230 V)

Restart is initiated when mains voltage exceeds about AC 185 V (at UN = AC 230 V).

Controlled intermittent operation

After no more than 24 hours of continuous operation, the burner control will initiate automatic controlled shutdown followed by a restart.

Reversed polarity protection with ionization

If the connections of live conductor (terminal 12) and neutral conductor (terminal 2) aremixed up, the burner control will initiate lockout at the end of the safety time “TSA”.

Control sequence in the event of fault

If lockout occurs, the outputs for the fuel valves, the burner motor and the ignition equipment will immediately be deactivated (< 1 second).

Operational status indication

In normal operation, the different operating states are showed by means of the multicolor LED, inside the lockout reset button:

LED	**red LED** **yellow LED** **green LED**	..... Steady on ❍... Off

During startup, status indication takes place according to the table:

Status	Color code	Color
Waiting time tw, other waiting states	❍.....	Off
Ignition phase, ignition controlled	● ❍ ● ❍ ● ❍ ● ❍ ● ❍ ●	Flashing yellow
Operation, flame ok	□.....	Green
Operation, flame not ok	□ ❍ □ ❍ □ ❍ □ ❍ □ ❍	Flashing green
Extraneous light on burner startup	□ ▲ □ ▲ □ ▲ □ ▲ □ ▲	Green - red
Undervoltage	● ▲ ● ▲ ● ▲ ● ▲ ● ▲	Yellow - red
Fault, alarm	▲.....	Red
Error code output (refer to “Error code table”)	▲❍ ▲❍ ▲❍ ▲❍	Flashing red

START-UP PROGRAM

As far as the startup program, see its time diagram:

A Start command (switching on)

This command is triggered by control thermostat / pressure controller «R». Terminal 12 receives voltage and the programming mechanism starts running. On completion of waiting time «tw» with the LME21..., or after air damper «SA» has reached the nominal load position (on completion of «t11») with the LME22..., fan motor «M» will be started.

tw Waiting time

During the waiting time, air pressure monitor «LP» and flame relay «FR» are tested for correct contact positions.

t11 Programmed opening time for actuator «SA»

(Only with LME22...) The air damper opens until the nominal load position is reached. Only then will fan motor «M» be switched on.

t10 Specified time for air pressure signal

On completion of this period of time, the set air pressure must have built up, or else lockout will occur.

t1 Prepurge time

Purging the combustion chamber and the secondary heating surfaces: required with low-fire air volumes when using the LME21... and with nominal load air volumes when using the LME22.... The diagrams show the so-called prepurge time «t1» during which air pressure monitor «LP» must indicate that the required air pressure is available. The effective prepurge time «t1» comprises interval end «tw» through «t3».

t12 Programmed closing time for actuator «SA»

(Only with LME22...)During «t12», the air damper travels to the low-fire position.

t3 Preignition time

During «t3» and up to the end of «TSA», flame relay «FR» is forced to close. On completion of «t3», the release of fuel is triggered at terminal 4.

TSA Ignition safety time

On completion of «TSA», a flame signal must be present at terminal 1. That flame signal must be continuously available until shutdown occurs, or else flame relay «FR» will be deenergized, resulting in lockout.

t4 Interval BV1 and BV2-LR

Time between the end of TSA and the signal to the second fuel valve BV2 or to the load controller LR

B - B' Interval for flame establishment

C Burner operation position

C - D Burner operation (heat production)

D Controlled by "R" shutdown

The burner stops and the control device is ready for a new startup.

LME11 control sequence

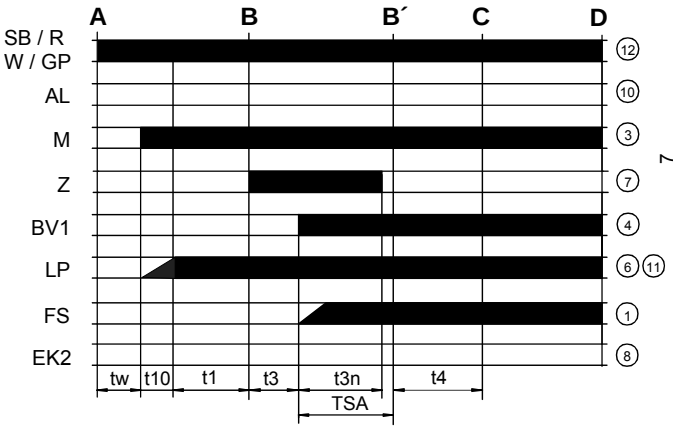

LME22 control sequence

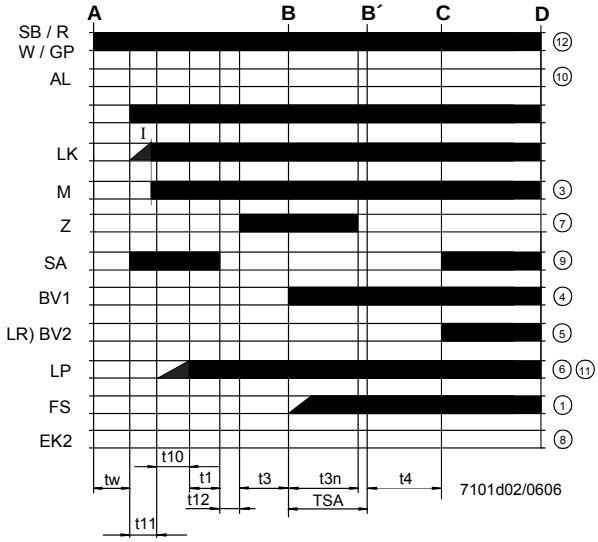

LME21 control sequence

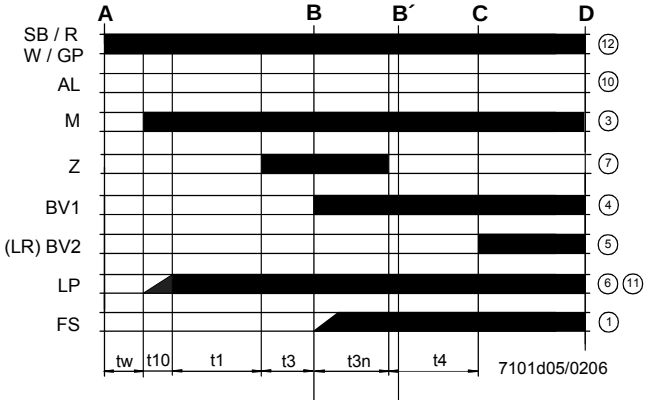

Control sequence

tw	Waiting time
t1	Purge time
TSA	Ignition safety time
t3	Preignition time
t3n	Postignition time
t4	Interval between BV1 and BV2/LR
t10	Specified time for air pressure signal
t11	Programmed opening time for actuator SA
t12	Programmed closing time for actuator SA

LME11 connection diagram

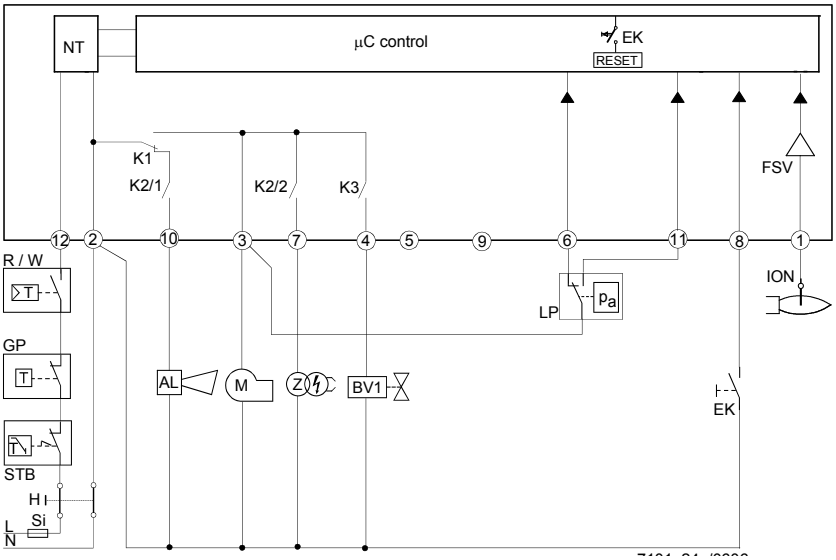

LME21 connection diagram

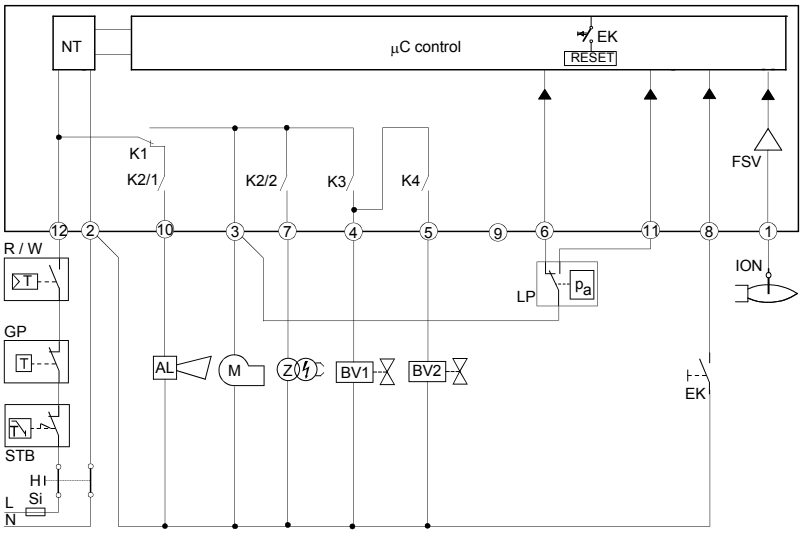

LME22 connection diagram

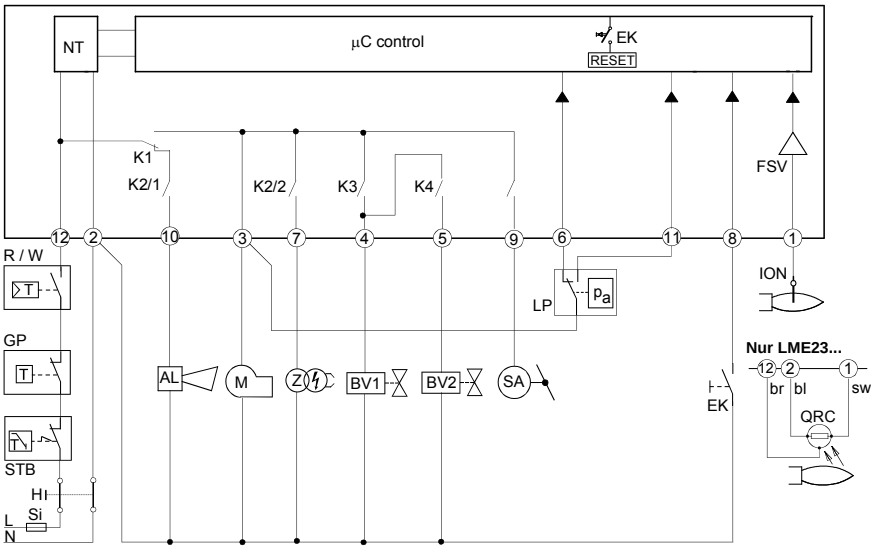

Connection diagram

AL	Error message (alarm)
BV	Fuel valve
EK2	Remote lockout reset button
FS	Flame signal
GP	Gas pressure switch
LP	Air pressure switch
LR	Load controller
M	Fan motor
R	Control thermostat/pressurestat
SB	Safety limit thermostat
W	Limit thermostat /pressure switch
Z	Ignition transformer

CONTROL PROGRAM IN THE EVENT OF FAULT

- If a fault occurs, all outputs will immediately be deactivated (in less than 1s).
- After an interruption of power, a restart will be made with the full program sequence.
- If the operating voltage drops below the undervoltage thresold, a safety shutdown is performed.
- If the operating voltage exceeds the undervoltage thresold, a restart will be performed.
- In case of extraneous light during “t1”, a lockout occurs.
- In case of extraneous light during “tw”, there is a prevention of startup and a lockout after 30 seconds.
- In case of no flame at the end of TSA, there will be max. 3 repetitions of the startup cycle, followed by a lockout at the end of TSA, for mod. LME11..; directly a lockout at the end of TSA for LME21-22 models.
- For LME11 model: if a loss of flame occurs during operation, in case of an establishment of flame at the end of TSA, there will be max. 3 repetitions, otherwise a lockout will occur.
- For LME21-22 models: if a loss of flame occurs during operation, there will be a lockout.
- If the contact of air pressure monitor LP is in working position, a prevention of startup and lockout after 65 seconds will occur.
- IIf the contact of air pressure monitor LP is in normal position, a lockout occurs at the end of t10.
- If no air pressure signal is present after completion of t1, a lockout will occur.

In the event of lockout, the LME.. remains locked and the red signal lamp (LED) will light up.The burner control can immediately be reset. This state is also mantained in the case fo mains failure.

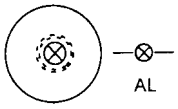

DIAGNOSITICS OF THE CASUE OF FAULT

- Press the lockout reset button for more than 3 seconds to activate the visual diagnostics.
- Count the number of blinks of the red signsl lamp and check the fault condition on the “Error code table” (the device repeats the blinks for regular intervals).

During diagnostics, the control outputs are deactivated:

- the burner remains shut down;
- external fault indication is deactivated;
- fault status is showed by the red LED, inside the LME’s lockout reset buttonaccording to the “Error code table”:

CONTROL BOX LOCKED

ERROR CODE TABLE	
2 blinks **	**No establishment of flame at the end of TSA** - Faulty or soiled fuel valves - Faulty or soiled flame detector - Inadequate adjustement of burner, no fuel - Faulty ignition equipment
3 blinks ***	**The air pressure switch does not switch or remains in idle position:** - LP is faulty - Loss of air pressure signal after t10 - LPis welded in normal position.
4 blinks ****	- Extraneous light when burner starts up.
5 blinks *****	- LP is working position.
6 blinks *****	Free.
7 blinks *******	**Loss of flame during operation** - Faulty or soiled fuel valves - Faulty or soiled flame detector - Inadequate adjustement of burner
8 ÷ 9 blinks	Free
10 blinks **********	**Faulty output contacts** - Wiring error - Anomalous voltage on ouput terminals - Other faults
14 blinks **************	- CPI contact not closed.

RESETTING THE BURNER CONTROL

When lockout occurs, the burner control can immediately be reset, by pressing the lockout reset button for about 1..3 seconds. The LME.. can only be reset when all contacts in the line are closed and when there is no undervoltage.

LIMITATION OF REPETITIONS (only for LME11.. model)

If no flame is established at the end of TSA, or if the flame is lost during operation, a maximum of 3 repetitions per controller startup can be performed via “R”, otherwise lockout will be initiated. Counting of repetitions is restarted each time a controlled startup via “R” takes place.

TECHNICAL CHARACTERISTICS

Mains voltage	120V AC +10% / -15% 230V AC +10% / -15%
Frequency	50 ... 60 Hz +/- 6%
Power consumption	12VA
External primary fuse	max. 10 A (slow)
input current at terminal 12	max. 5 A
Thermostats cable length	max. 3 m
Index of protection	IP40 (to be ensured during mounting)
Operating conditions	-20... +60 °C, < 95% UR
Storage conditions	-20... +60 °C, < 95% UR
Weight	approx. 160 g

CIB UNIGAS

Via L. Galvani, 9 - 35011 Campodarsego (PD) - ITALY
Tel. +39-049-9200944 - Fax +39-049-9200945/9201269
Internet: www.cibunigas.it - E mail: cibunigas@cibunigas.it

Note: specifications and data subject to change. Errors and omissions exceptd.

VERSIONE ALTA-BASSA FIAMMA "AB"
"AB" HIGH/LOW FLAME VERSION

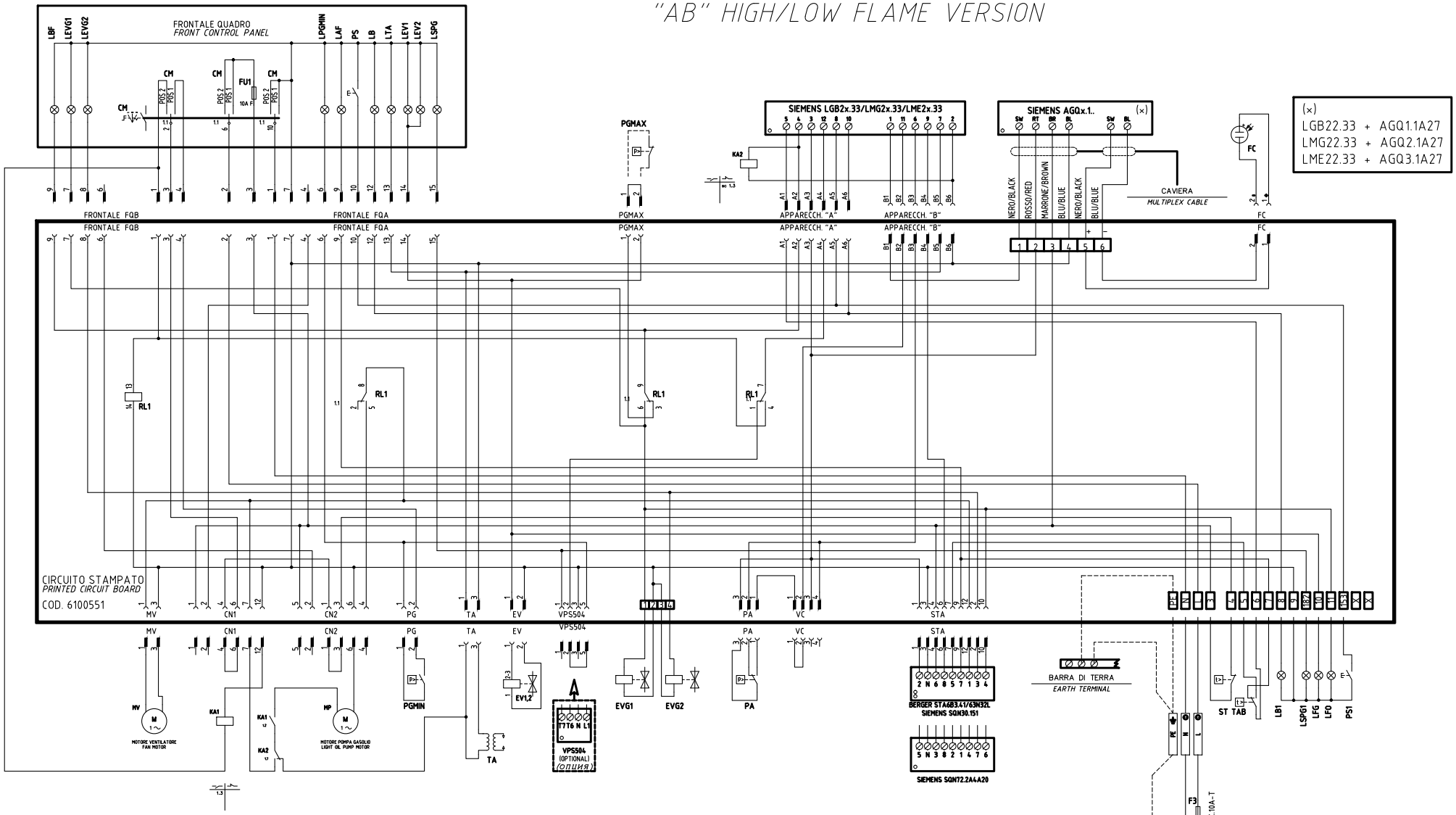

CAMME SERVOCOMANDO
ACTUATOR CAMS
STA6B3.41/63N32L

ST2	ALTA FIAMMA *HIGH FLAME*
ST0	SOSTA *STAND-BY*
ST1	ACCENSIONE E BASSA FIAMMA *IGNITION AND LOW FLAME*
MV	APERTURA EVG2 *OPEN EVG2*

CAMME SERVOCOMANDO (ALTERNATIVO)
ACTUATOR CAMS (ALTERNATIVE)
SQN30.151

I	ALTA FIAMMA *HIGH FLAME*
II	SOSTA *STAND-BY*
III	ACCENSIONE E BASSA FIAMMA *IGNITION AND LOW FLAME*
V	APERTURA EVG2 *OPEN EVG2*

CAMME SERVOCOMANDO (ALTERNATIVO)
ACTUATOR CAMS (ALTERNATIVE)
SQN72.2A4A20

I (ROSSO) *I (RED)*	ALTA FIAMMA *HIGH FLAME*
II (BLU) *II (BLUE)*	SOSTA *STAND-BY*
III (ARANCIO) *III (ORANGE)*	ACCENSIONE E BASSA FIAMMA *IGNITION AND LOW FLAME*
IV (NERO) *IV (BLACK)*	APERTURA EVG2 *OPEN EVG2*

REV.	MODIFICA	DATA	FIRME
03	POWER CONNECTION MODIFIED	19/09/14	U. PINTON
02	ADDED "KA1" AND "KA2"	28/06/12	U. PINTON
01	AGGIUNTO/ADDED SQN72...	22/05/09	U. PINTON

UNIGAS

Impianto
TIPI/TYPES HP20 ÷ HP30
MODELLO/MODEL MG.AB.x.xx.A.1.xx

Descrizione
VERSIONE CON CIRCUITO STAMPATO
WITH PRINTED CIRCUIT VERSION

Ordine
Commessa
Esecutore U. PINTON
Data Controllato 19/09/2014
Controllato E. CAVALLI

Data 24/09/2008
Revisione 03
Dis. N. 18 – 0162
PREC. /
FOGLIO 1
SEGUE 2
TOTALE 2

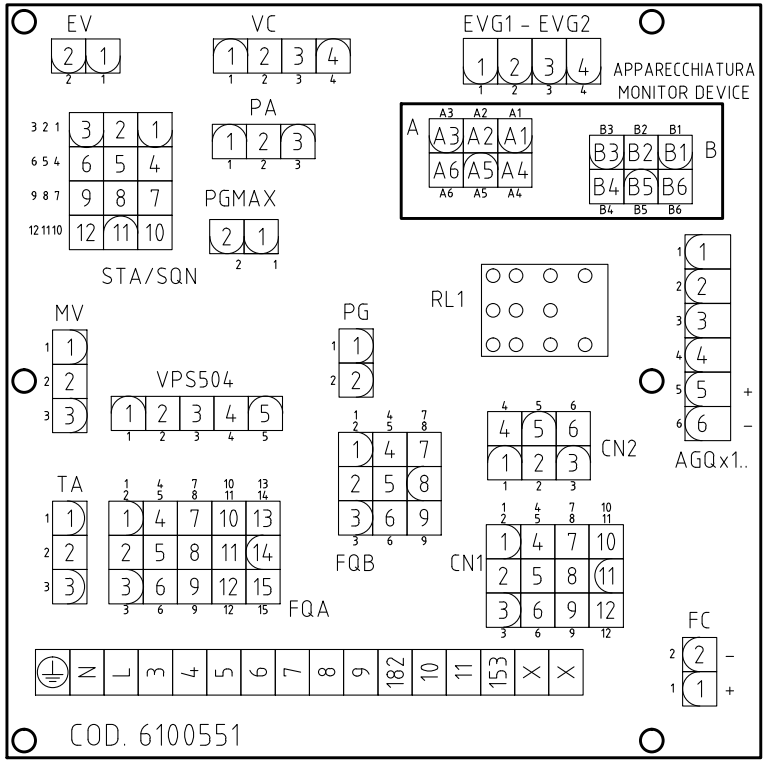

Sigla/Item	Funzione	Function
BERGER STA6B3.41/63N32L	SERVOCOMANDO SERRANDA ARIA	AIR DAMPER ACTUATOR
CM	SELETTORE MANUALE COMBUSTIBILE 1) GAS 0) OFF 2) GASOLIO	COMBUSTIBLE SELECTOR 1)GAS 0)OFF 2)LIGHT OIL
EV1,2	ELETTROVALVOLE GAS (O GRUPPO VALVOLE)	GAS ELECTRO-VALVES (OR VALVES GROUP)
EVG1	ELETTROVALVOLA GASOLIO	LIGHT OIL SOLENOID VALVE
EVG2	ELETTROVALVOLA GASOLIO	LIGHT OIL SOLENOID VALVE
F3	FUSIBILE DI LINEA	LINE FUSE
FC	SONDA UV RILEVAZIONE FIAMMA	UV FLAME DETECTOR
FU1	FUSIBILE DI LINEA	LINE FUSE
IG	INTERRUTTORE GENERALE	MAINS SWITCH
KA1	RELE' AUSILIARIO	AUXILIARY RELAY
KA2	RELE' AUSILIARIO	AUXILIARY RELAY
LAF	LAMPADA SEGNALAZIONE ALTA FIAMMA BRUCIATORE	BURNER IN HIGH FLAME INDICATOR LIGHT
LB	LAMPADA SEGNALAZIONE BLOCCO BRUCIATORE	INDICATOR LIGHT FOR BURNER LOCK-OUT
LB1	LAMPADA SEGNALAZIONE BLOCCO BRUCIATORE	INDICATOR LIGHT FOR BURNER LOCK-OUT
LBF	LAMPADA SEGNALAZIONE BASSA FIAMMA BRUCIATORE	BURNER IN LOW FLAME INDICATOR LIGHT
LEV1	LAMPADA SEGNALAZIONE APERTURA [EV1]	INDICATOR LIGHT FOR OPENING OF ELECTRO-VALVE [EV1]
LEV2	LAMPADA SEGNALAZIONE APERTURA [EV2]	INDICATOR LIGHT FOR OPENING OF ELECTRO-VALVE [EV2]
LEVG1	LAMPADA SEGNALAZIONE APERTURA [EVG1]	INDICATOR LIGHT FOR OPENING OF ELECTRO-VALVE [EVG1]
LEVG2	LAMPADA SEGNALAZIONE APERTURA [EVG2]	INDICATOR LIGHT FOR OPENING OF ELECTRO-VALVE [EVG2]
LFG	LAMPADA SEGNALAZIONE FUNZIONAMENTO BRUCIATORE A GAS	BURNER GAS OPERATION INDICATOR LIGHT
LFO	LAMPADA SEGNALAZIONE FUNZIONAMENTO BRUCIATORE A GASOLIO	BURNER LIGHT OIL OPERATION INDICATOR LIGHT
LPGMIN	LAMPADA SEGNALAZIONE PRESENZA GAS IN RETE	INDICATOR LIGHT FOR PRESENCE OF GAS IN THE NETWORK
LSPG	LAMPADA SEGNALAZIONE BLOCCO CONTROLLO TENUTA VALVOLE	INDICATOR LIGHT FOR LEAKAGE OF VALVES
LSPG1	LAMPADA SEGNALAZIONE BLOCCO CONTROLLO TENUTA VALVOLE	INDICATOR LIGHT FOR LEAKAGE OF VALVES
LTA	LAMPADA SEGNALAZIONE TRASFORMATORE DI ACCENSIONE	IGNITION TRANSFORMER INDICATOR LIGHT
MP	MOTORE POMPA GASOLIO	LIGHT OIL PUMP MOTOR
MV	MOTORE VENTILATORE	FAN MOTOR
PA	PRESSOSTATO ARIA	AIR PRESSURE SWITCH
PGMAX	PRESSOSTATO GAS DI MASSIMA PRESSIONE (OPTIONAL)	MAXIMUM PRESSURE GAS SWITCH (OPTIONAL)
PGMIN	PRESSOSTATO GAS DI MINIMA PRESSIONE	MINIMUM GAS PRESSURE SWITCH
PS	PULSANTE SBLOCCO FIAMMA	LOCK-OUT RESET BUTTON
PS1	PULSANTE SBLOCCO FIAMMA	LOCK-OUT RESET BUTTON
RL1	RELE' AUSILIARIO	AUXILIARY RELAY
SIEMENS AGQx.1..	ADATTATORE PER SONDA UV RILEVAZIONE FIAMMA	ADAPTER FOR UV FLAME DETECTOR
SIEMENS LGB2x.33/LMG2x.33/LME2x.33	APPARECCHIATURA CONTROLLO FIAMMA	CONTROL BOX
SIEMENS SQN30.151	SERVOCOMANDO SERRANDA ARIA (ALTERNATIVO)	AIR DAMPER ACTUATOR (ALTERNATIVE)
SIEMENS SQN72.2A4A20	SERVOCOMANDO SERRANDA ARIA (ALTERNATIVO)	AIR DAMPER ACTUATOR (ALTERNATIVE)
ST	SERIE TERMOSTATI/PRESSOSTATI	SERIES OF THERMOSTATS OR PRESSURE SWITCHES
TA	TRASFORMATORE DI ACCENSIONE	IGNITION TRANSFORMER
TAB	TERMOSTATO/PRESSOSTATO ALTA-BASSA FIAMMA	HIGH-LOW THERMOSTAT/PRESSURE SWITCHES
VPS504	CONTROLLO DI TENUTA VALVOLE GAS (OPTIONAL)	GAS PROVING SYSTEM (OPTIONAL)

Data	24/09/2008	PREC.	FOGLIO
Revisione	03	1	2
Dis. N.	18 – 0162	SEGUE	TOTALE
		/	2