P61, P65, P71

Gas burners

MANUAL OF INSTALLATION - USE - MAINTENANCE

CIB UNIGAS

BURNERS - BRUCIATORI - BRULERS - BRENNER - QUEMADORES - ГОРЕЛКИ

M039393CB 0.1 09/2023

DANGERS, WARNINGS AND NOTES OF CAUTION

THIS MANUAL IS SUPPLIED AS AN INTEGRAL AND ESSENTIAL PART OF THE PRODUCT AND MUST BE DELIVERED TO THE USER.

INFORMATION INCLUDED IN THIS SECTION ARE DEDICATED BOTH TO THE USER AND TO PERSONNEL FOLLOWING PRODUCT INSTALLATION AND MAINTENANCE.

THE USER WILL FIND FURTHER INFORMATION ABOUT OPERATING AND USE RESTRICTIONS, IN THE SECOND SECTION OF THIS MANUAL. WE HIGHLY RECOMMEND TO READ IT.

CAREFULLY KEEP THIS MANUAL FOR FUTURE REFERENCE.

1) GENERAL INTRODUCTION

- The equipment must be installed in compliance with the regulations in force, following the manufacturer's instructions, by qualified personnel.
- Qualified personnel means those having technical knowledge in the field of components for civil or industrial heating systems, sanitary hot water generation and particularly service centres authorised by the manufacturer.
- Improper installation may cause injury to people and animals, or damage to property, for which the manufacturer cannot be held liable.
- Remove all packaging material and inspect the equipment for integrity.

In case of any doubt, do not use the unit - contact the supplier.

The packaging materials (wooden crate, nails, fastening devices, plastic bags, foamed polystyrene, etc), should not be left within the reach of children, as they may prove harmful.

- Before any cleaning or servicing operation, disconnect the unit from the mains by turning the master switch OFF, and/or through the cut-out devices that are provided.
- Make sure that inlet or exhaust grilles are unobstructed.
- In case of breakdown and/or defective unit operation, disconnect the unit. Make no attempt to repair the unit or take any direct action.

Contact qualified personnel only.

Units shall be repaired exclusively by a servicing centre, duly authorised by the manufacturer, with original spare parts and accessories.

Failure to comply with the above instructions is likely to impair the unit's safety.

To ensure equipment efficiency and proper operation, it is essential that maintenance operations are performed by qualified personnel at regular intervals, following the manufacturer's instructions.

- When a decision is made to discontinue the use of the equipment, those parts likely to constitute sources of danger shall be made harmless.
- In case the equipment is to be sold or transferred to another user, or in case the original user should move and leave the unit behind, make sure that these instructions accompany the equipment at all times so that they can be consulted by the new owner and/or the installer.
- This unit shall be employed exclusively for the use for which it is meant. Any other use shall be considered as improper and, therefore, dangerous.

The manufacturer shall not be held liable, by agreement or otherwise, for damages resulting from improper installation, use and failure to comply with the instructions supplied by the manufacturer.The occurrence of any of the following circustances may cause explosions, polluting unburnt gases (example: carbon monoxide CO), burns, serious harm to people, animals and things:

- Failure to comply with one of the WARNINGS in this chapter
- Incorrect handling, installation, adjustment or maintenance of the burner
- Incorrect use of the burner or incorrect use of its parts or optional supply

2) SPECIAL INSTRUCTIONS FOR BURNERS

- The burner should be installed in a suitable room, with ventilation openings complying with the requirements of the regulations in force, and sufficient for good combustion.
- Only burners designed according to the regulations in force should be used.
- This burner should be employed exclusively for the use for which it was designed.
- Before connecting the burner, make sure that the unit rating is the same as delivery mains (electricity, gas oil, or other fuel).
- Observe caution with hot burner components. These are, usually, near to the flame and the fuel pre-heating system, they become hot during the unit operation and will remain hot for some time after the burner has stopped.

When the decision is made to discontinue the use of the burner, the user shall have qualified personnel carry out the following operations:

a Remove the power supply by disconnecting the power cord from the mains.

b Disconnect the fuel supply by means of the hand-operated shut-off valve and remove the control handwheels from their spindles.

Special warnings

- Make sure that the burner has, on installation, been firmly secured to the appliance, so that the flame is generated inside the appliance fire-box.
- Before the burner is started and, thereafter, at least once a year, have qualified personnel perform the following operations:

a set the burner fuel flow rate depending on the heat input of the appliance;

b set the flow rate of the combustion-supporting air to obtain a combustion efficiency level at least equal to the lower level required by the regulations in force;

c check the unit operation for proper combustion, to avoid any harmful or polluting unburnt gases in excess of the limits permitted by the regulations in force;

d make sure that control and safety devices are operating properly;

e make sure that exhaust ducts intended to discharge the products of combustion are operating properly;

f on completion of setting and adjustment operations, make sure that all mechanical locking devices of controls have been duly tightened;

g make sure that a copy of the burner use and maintenance instructions is available in the boiler room.

- In case of a burner shut-down, reser the control box by means of the RESET pushbutton. If a second shut-down takes place, call the Technical Service, **without trying to RESET further**.
- The unit shall be operated and serviced by qualified personnel only, in compliance with the regulations in force.

3) GENERAL INSTRUCTIONS DEPENDING ON FUEL USED

3a) ELECTRICAL CONNECTION

- For safety reasons the unit must be efficiently earthed and installed as required by current safety regulations.
- It is vital that all saftey requirements are met. In case of any doubt, ask for an accurate inspection of electrics by qualified personnel, since the manufacturer cannot be held liable for damages that may be caused by failure to correctly earth the equipment.
- Qualified personnel must inspect the system to make sure that it is adequate to take the maximum power used by the equipment shown on the equipment rating plate. In particular, make sure that the system cable cross section is adequate for the power absorbed by the unit.
- No adaptors, multiple outlet sockets and/or extension cables are permitted to connect the unit to the electric mains.
- An omnipolar switch shall be provided for connection to mains, as required by the current safety regulations.
- The use of any power-operated component implies observance of a few basic rules, for example:
  - do not touch the unit with wet or damp parts of the body and/or with bare feet;
  - do not pull electric cables;
  - do not leave the equipment exposed to weather (rain, sun, etc.) unless expressly required to do so;
  - do not allow children or inexperienced persons to use equipment;
- The unit input cable shall not be replaced by the user.
  In case of damage to the cable, switch off the unit and contact qualified personnel to replace.
  When the unit is out of use for some time the electric switch supplying all the power-driven components in the system (i.e. pumps, burner, etc.) should be switched off.

3b) FIRING WITH GAS, LIGHT OIL OR OTHER FUELS

GENERAL

- The burner shall be installed by qualified personnel and in compliance with regulations and provisions in force; wrong installation can cause injuries to people and animals, or damage to property, for which the manufacturer cannot be held liable.
- Before installation, it is recommended that all the fuel supply system pipes be carefully cleaned inside, to remove foreign matter that might impair the burner operation.
- Before the burner is commissioned, qualified personnel should inspect the following:

a the fuel supply system, for proper sealing;
b the fuel flow rate, to make sure that it has been set based on the firing rate required of the burner;
c the burner firing system, to make sure that it is supplied for the designed fuel type;
d the fuel supply pressure, to make sure that it is included in the range shown on the rating plate;
e the fuel supply system, to make sure that the system dimensions are adequate to the burner firing rate, and that the system is equipped with all the safety and control devices required by the regulations in force.

- When the burner is to remain idle for some time, the fuel supply tap or taps should be closed.

SPECIAL INSTRUCTIONS FOR USING GAS

Have qualified personnel inspect the installation to ensure that:

a the gas delivery line and train are in compliance with the regulations and provisions in force;
b all gas connections are tight;
c the boiler room ventilation openings are such that they ensure the air supply flow required by the current regulations, and in any case are sufficient for proper combustion.

- Do not use gas pipes to earth electrical equipment.
- Never leave the burner connected when not in use. Always shut the gas valve off.
- In case of prolonged absence of the user, the main gas delivery valve to the burner should be shut off.

Precautions if you can smell gas

a do not operate electric switches, the telephone, or any other item likely to generate sparks;
b immediately open doors and windows to create an air flow to purge the room;
c close the gas valves;
d contact qualified personnel.

- Do not obstruct the ventilation openings of the room where gas appliances are installed, to avoid dangerous conditions such as the development of toxic or explosive mixtures.

DIRECTIVES AND STANDARDS

Gas burners

European directives

-Regulation 2016/426/UE (appliances burning gaseous fuels)
-2014/35/UE (Low Tension Directive)
-2014/30/UE (Electromagnetic compatibility Directive)
-2006/42/EC (Machinery Directive)

Harmonized standards

-UNI EN 676 (Automatic forced draught burners for gaseous fuels)
-EN 55014-1 (Electromagnetic compatibility- Requirements for house hold appliances, electric tools and similar apparatus)
-EN 60204-1:2006 (Safety of machinery – Electrical equipment of machines.)
-CEI EN 60335-1 (Specification for safety of household and similar electrical appliances);
-CEI EN 60335-2-102 (Household and similar electrical appliances. Safety. Particular requirements for gas, oil and solid-fuel burning appliances having electrical connections).
-UNI EN ISO 12100:2010 (Safety of machinery - General principles for design - Risk assessment and risk reduction);

Light oil burners

European directives

-2014/35/UE (Low Tension Directive)
-2014/30/UE (Electromagnetic compatibility Directive)
-2006/42/EC (Machinery Directive)

Harmonized standards

-UNI EN 267-2011(Automatic forced draught burners for liquid fuels)
-EN 55014-1 (Electromagnetic compatibility- Requirements for house hold appliances, electric tools and similar apparatus)
-EN 60204-1:2006 (Safety of machinery – Electrical equipment of machines.)
-CEI EN 60335-1 (Specification for safety of household and similar electrical appliances);
-CEI EN 60335-2-102 (Household and similar electrical appliances. Safety. Particular requirements for gas, oil and solid-fuel burning appliances having electrical connections).
-UNI EN ISO 12100:2010 (Safety of machinery - General principles for design - Risk assessment and risk reduction);

Heavy oil burners

European Directives

-2014/35/UE (Low Tension Directive)
-2014/30/UE (Electromagnetic compatibility Directive)
-2006/42/EC (Machinery Directive)

Harmonized standards

-UNI EN 267(Automatic forced draught burners for liquid fuels)
-EN 55014-1 (Electromagnetic compatibility- Requirements for house hold appliances, electric tools and similar apparatus)
-EN 60204-1:2006 (Safety of machinery – Electrical equipment of machines.)
-CEI EN 60335-1 (Specification for safety of household and similar electrical appliances);
-CEI EN 60335-2-102 (Household and similar electrical appliances. Safety. Particular requirements for gas, oil and solid-fuel burning appliances having electrical connections).
-UNI EN ISO 12100:2010 (Safety of machinery - General principles for design - Risk assessment and risk reduction);

Gas - Light oil burners

European Directives

-Regulation 2016/426/UE (appliances burning gaseous fuels)
-2014/35/UE (Low Tension Directive)
-2014/30/UE (Electromagnetic compatibility Directive)
-2006/42/EC (Machinery Directive)

Harmonized standards

-UNI EN 676 (Automatic forced draught burners for gaseous fuels)
-UNI EN 267(Automatic forced draught burners for liquid fuels)
-EN 55014-1 (Electromagnetic compatibility- Requirements for house hold appliances, electric tools and similar apparatus)
-EN 60204-1:2006 (Safety of machinery – Electrical equipment of machines.)
-CEI EN 60335-1 (Specification for safety of household and similar electrical appliances);
-CEI EN 60335-2-102 (Household and similar electrical appliances. Safety. Particular requirements for gas, oil and solid-fuel burning appliances having electrical connections).
-UNI EN ISO 12100:2010 (Safety of machinery - General principles for design - Risk assessment and risk reduction);

Gas - Heavy oil burners

European directives:

-Regulation 2016/426/UE (appliances burning gaseous fuels)
-2014/35/UE (Low Tension Directive)
-2014/30/UE (Electromagnetic compatibility Directive)
-2006/42/EC (Machinery Directive)

Harmonized standards

-UNI EN 676 (Automatic forced draught burners for gaseous fuels)
-EN 55014-1 (Electromagnetic compatibility- Requirements for house hold appliances, electric tools and similar apparatus)
-EN 60204-1:2006 (Safety of machinery – Electrical equipment of machines.)
-CEI EN 60335-1 (Specification for safety of household and similar electrical appliances);
-CEI EN 60335-2-102 (Household and similar electrical appliances. Safety. Particular requirements for gas, oil and solid-fuel burning appliances having electrical connections).
-UNI EN ISO 12100:2010 (Safety of machinery - General principles for design - Risk assessment and risk reduction);

Industrial burners

European directives

-Regulation 2016/426/UE (appliances burning gaseous fuels)
-2014/35/UE (Low Tension Directive)
-2014/30/UE (Electromagnetic compatibility Directive)
-2006/42/EC (Machinery Directive)

Harmonized standards

-EN 55014-1 (Electromagnetic compatibility- Requirements for house hold appliances, electric tools and similar apparatus)
-EN 746-2 (Industrial thermoprocessing equipment - Part 2: Safety requirements for combustion and fuel handling systems)
-UNI EN ISO 12100:2010 (Safety of machinery - General principles for design - Risk assessment and risk reduction);
-EN 60204-1:2006 (Safety of machinery – Electrical equipment of machines.)
-EN 60335-2 (Electrical equipment of non-electric appliances for household and similar purposes. Safety requirements)

Burner data plate

For the following information, please refer to the data plate:

- burner type and burner model: must be reported in any communication with the supplier
- burner ID (serial number): must be reported in any communication with the supplier
- date of production (year and month)
- information about fuel type and network pressure

Type	--
Model	--
Year	--
S.Number	--
Output	--
Oil Flow	--
Fuel	--
Category	--
Gas Pressure	--
Viscosity	--
El.Supply	--
El.Consump.	--
Fan Motor	--
Protection	--
Drwaing n°	--
P.I.N.	--

SYMBOLS USED

WARNING! Failure to observe the warning may result in irreparable damage to the unit or damage to the environment

DANGER! Failure to observe the warning may result in serious injuries or death.

WARNING! Failure to observe the warning may result in electric shock with lethal consequences

Figures, illustrations and images used in this manual may differ in appearance from the actual product.

BURNER SAFETY

The burners - and the configurations described below - comply with the regulations in force regarding health, safety and the environment. For more in-depth information, refer to the declarations of conformity that are an integral part of this Manual.

DANGER! Incorrect motor rotation can seriously damage property and injure people.

Residual risks deriving from misuse and prohibitions

The burner has been built in order to make its operation safe; there are, however, residual risks.

Do not touch any mechanical moving parts with your hands or any other part of your body. Injury hazard
Do not touch any parts containing fuel (i.e. tank and pipes). Scalding hazard
Do not use the burner in situations other than the ones provided for in the data plate.
Do not use fuels other than the ones stated.
Do not use the burner in potentially explosive environments.
Do not remove or by-pass any machine safety devices.
Do not remove any protection devices or open the burner or any other component while the burner is running.
Do not disconnect any part of the burner or its components while the burner is running.
Untrained staff must not modify any linkages.

After any maintenance, it is important to restore the protection devices before restarting the machine.
All safety devices must be kept in perfect working order.
Personnel authorized to maintain the machine must always be provided with suitable protections.

ATTENTION: while running, the parts of the burner near the generator (coupling flange) are subject to overheating. Where necessary, avoid any contact risks by wearing suitable PPE.

PART I: SPECIFICATIONS

BURNERS FEATURES

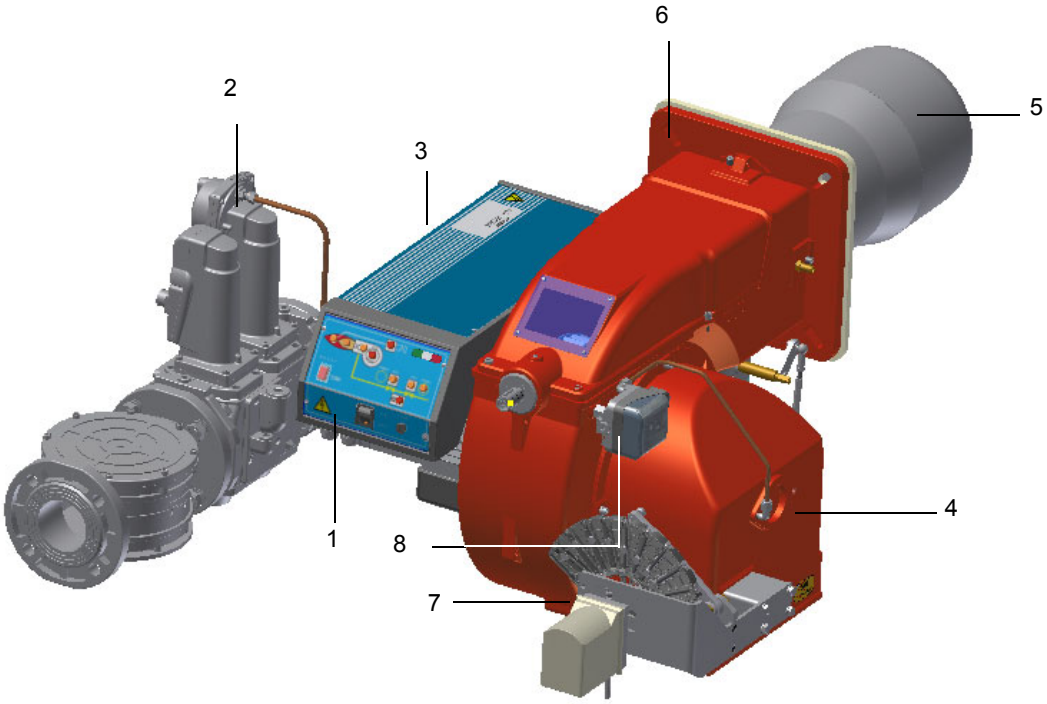

Fig. 1

Note: the figure is indicative only.

1 Control panel with startup switch
2 Gas valves group
3 Electrical panel
4 Air tank
5 Blast tube + Combustion head
6 Flange
7 Adjusting cam (progressive/fully modulating burners only)
8 Air pressure switch

Gas operation: the gas coming from the supply line, passes through the valves group provided with filter and stabiliser. This one forces the pressure in the utilisation limits. The electric actuator , that moves proportionally the air damper and the gas butterfly valve, uses an adjusting cam with variable shape. This one allows the optimisation of the gas flue values, as to get an efficient combustion. The combustion head positioning determines the burner's output. The combustion head determines the energetic quality and the geometry of the flame. Fuel and comburent are routed into separated ways as far as the zone of flame generation (combustion chamber).

The control panel , placed on the burner's front side, shows each operating stage.

Country and usefulness gas categories

GAS CATEGORY	COUNTRY																								
I_{2H}	AT	ES	GR	SE	FI	IE	HU	IS	NO	CZ	DK	GB	IT	PT	CY	EE	LV	SI	MT	SK	BG	LT	RO	TR	CH
I_{2E}	LU	PL	-	-	-	-	-	-	-	-	-	-	-	-	-	-	-	-	-	-	-	-	-	-	-
$I_{2E(R)B}$	BE	-	-	-	-	-	-	-	-	-	-	-	-	-	-	-	-	-	-	-	-	-	-	-	-
(*) I_{2EK}	NL	-	-	-	-	-	-	-	-	-	-	-	-	-	-	-	-	-	-	-	-	-	-	-	-
I_{2ELL}	DE	-	-	-	-	-	-	-	-	-	-	-	-	-	-	-	-	-	-	-	-	-	-	-	-
I_{2Er}	FR	-	-	-	-	-	-	-	-	-	-	-	-	-	-	-	-	-	-	-	-	-	-	-	-

(*) Only for I_{2EK} : the appliance was configured for the appliance category K (I2K) and is suitable for the use of G and G+ distribution gases according to the specifications as included in the NTA 8837:2012 Annex D with a Wobbe index of 43.46 – 45.3 MJ/m3 (dry, 0 °C, upper value) or 41.23 – 42.98 (dry, 15 °C, upper value). This appliance can moreover be converted and/or be calibrated for the appliance category E (I2E). This therefore implies that the appliance "is suitable for G+ gas and H gas or is demonstrably suitable for G+ gas and can demonstrably be made suitable for H gas" within the meaning of the "Dutch Decree of 10 May 2016 regarding amendment of the Dutch Gas Appliances Decree and the Dutch Commodities (Administrative Fines) Act in connection with the changing composition of gas in the Netherlands as well as technical amendment of some other decrees.

Burner model identification

Burners are identified by burner type and model. Burner model identification is described as follows.

Type	**P71**	Model	**M-.**	**MD.**	**S.**	***.**	**A.**	**1.**	**80.**
	(1)		**(2)**	**(3)**	**(4)**	**(5)**	**(6)**	**(7)**	**(8)**

1	BURNER TYPE	**P61 - P65 - P71**
2	FUEL	M - Natural gas L - LPG B - Biogas C - Town gas
3	OPERATION (Available versions)	PR - Progressive MD - Fully modulating AB - Double stage
4	BLAST TUBE	S - Standard L - Extended
5	DESTINATION COUNTRY	* - see data plate
6	BURNER VERSION	A - Standard Y - SpecialeSpecial
7	EQUIPMENT	0 = 2 gas valves 1 = 2 gas valves + gas proving system 7 = 2 gas valves + maximum gas pressure switch 8 = 2 gas valves + gas proving system + maximum gas pressure switch
8	GAS CONNECTION	32 = $Rp1_{1/4}$ 40 = $Rp1_{1/2}$ 50 = Rp2 65 = DN65 80 = DN80

Fuel

Type	--
Model	--
Year	--
S.Number	--
Output	--
Oil Flow	--
Fuel	--
Category	--
Gas Pressure	--
Viscosity	--
El.Supply	--
El.Consump.	--

WARNING! The burner must be used only with the fuel specified in the burner data plate .

The burner technical specifications, described in this manual, refer to natural gas (calorific net value Hi = 9.45 kWh/Stm^3, density ρ = 0.717 Kg/Stm^3) and LPG (calorific net value Hi = 26.79 kWh/Stm^3, density ρ = 2.151 Kg/Stm^3). For different fuel such as town gas and biogas, multiply the values of flow and pressure by th corrective factors shown in the table below.

Fuel	**Hi** (KWh/Stm^3)	**ρ** (kg/Stm^3)	f_Q	f_p
Town gas	4,88	0,6023	1,936	3,3
Biogas	6,395	1,1472	1,478	3,5

For example, to obtain the flow and pressure values for the biogas:

$$Q_{biogas} = Q_{naturalGas} \cdot 1,478$$

$$p_{biogas} = p_{naturalGas} \cdot 3,5$$

ATTENTION! The combustion head type and the settings depend on the fuel. The burner must be used only for its intended purpose specified in the burner data plate .

ATTENTION! The corrective factors in the above table depend on the gas composition, so on the calorifc value and the density of the gas. The above value can be taken only as reference.

Technical Specifications

BURNER TYPE		P61 M-..	P61 L-...
Output	min. - max. kW	160 - 800	
Fuel		Natural gas	L.P.G.
Category		see next paragraph	$I_{3B/P}$
Gas flow rate	min.-max. Stm³/h	17 - 85	6 - 30
Gas pressure	min.-max. mbar	(see Note 2)	
Electric supply (three-phase)		230 V 50 Hz 3 a.c. - 380 V / 400 V 50 Hz 3 a.c.	
Auxiliary electric supply (single-phase)		220 V 50 Hz 2 a.c. / 220-230 V 50 Hz 1N a.c. **(1)**	
Total power consumption	kW	1.6	
Fan motor	kW	1.1	
Protection		IP40	
Approx. weight	kg	55 - 70	
Operation		Two stages - Progressive - Fully modulating	
Valves size/Gas connection - 32		1"$_{1/4}$ / Rp1$_{1/4}$	1"$_{1/4}$ / Rp1$_{1/4}$
Valves size/Gas connection - 40		1"$_{1/2}$ / Rp1$_{1/2}$	1"$_{1/2}$ / Rp1$_{1/2}$
Valves size/Gas connection - 50		2" / Rp2	2" / Rp2
Valves size/Gas connection - 65		2"$_{1/2}$ / DN65	2"$_{1/2}$ / DN65
Operating temperature	°C	-10 ÷ +50	
Storage Temperature	°C	-20 ÷ +60	
Working service(*)		Intermitent	

(1) see paragraph RC circuit page: 26

BURNER TYPE		P65 M-....	P65 L-....
Output	min. - max. kW	270 - 970	
Fuel		Natural gas	L.P.G.
Category		see next paragraph	$I_{3B/P}$
Gas flow rate	min.-max. Stm³/h	29 - 103	10 - 37
Gas pressure	min.-max. mbar	(see Note 2)	
Electric supply (three-phase)		230 V 50 Hz 3 a.c. - 380 V / 400 V 50 Hz 3 a.c.	
Auxiliary electric supply (single-phase)		220 V 50 Hz 2 a.c. / 220-230 V 50 Hz 1N a.c. **(1)**	
Total power consumption	kW	2	
Fan motor	kW	1.5	
Protection		IP40	
Approx. weight	kg	60 - 80	
Operation		Two stages - Progressive - Fully modulating	
Valves size/Gas connection - 32		1"$_{1/4}$ / Rp1$_{1/4}$	1"$_{1/4}$ / Rp1$_{1/4}$
Valves size/Gas connection - 40		1"$_{1/2}$ / Rp1$_{1/2}$	1"$_{1/2}$ / Rp1$_{1/2}$
Valves size/Gas connection - 50		2" / Rp2	2" / Rp2
Valves size/Gas connection - 65		2"$_{1/2}$ / DN65	2"$_{1/2}$ / DN65
Operating temperature	°C	-10 ÷ +50	
Storage Temperature	°C	-20 ÷ +60	
Working service(*)		Intermitent	

(1) see paragraph RC circuit page: 26

Note1:	**All gas flow rates are referred to Stm^3/h (1013 mbar absolute pressure, 15 °C temperature) and are valid for G20 gas (net calorific value H_i = 34.02 MJ/Stm^3), L.P.G. (net calorific value H_i = 93.5 MJ/Stm^3)**
Note2:	**Maximum gas pressure = 360mbar (with Dungs MBDLE/MBC valves)** **= 500mbar (with Siemens VGD / Dungs MBCvalves)**

(*) NOTE ON THE WORKING SERVICE: the control box automatically stops after 24h of continuous working. The control box immediately starts up, automatically.

BURNER TYPE		P71 M-...0.xx	P71 L-...0.xx
Output	min. - max. kW	300 - 1.200	
Fuel		Natural gas	L.P.G.
Category		see next paragraph	$I_{3B/P}$
Gas flow rate	min.-max. Stm³/h	32 - 127	11 - 45
Gas pressure	min.-max. mbar	(see Note 2)	
Electric supply (three-phase)		230 V 50 Hz 3 a.c. - 380 V / 400 V 50 Hz 3 a.c.	
Auxiliary electric supply (single-phase)		220 V 50 Hz 2 a.c. / 220-230 V 50 Hz 1N a.c. **(1)**	
Total power consumption	kW	2.7	
Fan motor	kW	2.2	
Protection		IP40	
Approx. weight	kg	80 - 115	
Operation		Two stages - Progressive - Fully modulating	
Valves size/Gas connection - 40		1"$_{1/2}$ / Rp1$_{1/2}$	1"$_{1/2}$ / Rp1$_{1/2}$
Valves size/Gas connection - 50		2"/Rp2	2"/Rp2
Valves size/Gas connection - 65		2"$_{1/2}$ / DN65	2"$_{1/2}$ / DN65
Valves size/Gas connection - 80		3" / DN80	3" / DN80
Operating temperature	°C	-10 ÷ +50	
Storage Temperature	°C	-20 ÷ +60	
Working service(*)		Intermitent	

(1) see paragraph RC circuit page: 26

BURNER TYPE		P71 M-...1.xx	P71 L-...1.xx
Output	min. - max. kW	300 - 1.650	
Fuel		Natural gas	L.P.G.
Category		see next paragraph	$I_{3B/P}$
Gas flow rate	min.-max. Stm³/h	32 - 175	11 - 62
Gas pressure	min.-max. mbar	(see Note 2)	
Electric supply (three-phase)		230 V 50 Hz 3 a.c. - 380 V / 400 V 50 Hz 3 a.c.	
Auxiliary electric supply (single-phase)		220 V 50 Hz 2 a.c. / 220-230 V 50 Hz 1N a.c. **(1)**	
Total power consumption	kW	2.7	
Fan motor	kW	2.2	
Protection		IP40	
Approx. weight	kg	85 - 115	
Operation		Two stages - Progressive - Fully modulating	
Valves size/Gas connection - 40		1"$_{1/2}$ / Rp1$_{1/2}$	1"$_{1/2}$ / Rp1$_{1/2}$
Valves size/Gas connection - 50		2"/Rp2	2"/Rp2
Valves size/Gas connection - 65		2"$_{1/2}$ / DN65	2"$_{1/2}$ / DN65
Valves size/Gas connection - 80		3" / DN80	3" / DN80
Operating temperature	°C	-10 ÷ +50	
Storage Temperature	°C	-20 ÷ +60	
Working service(*)		Intermitent	

(1) see paragraph RC circuit page: 26

Note1:	**All gas flow rates are referred to Stm³/h (1013 mbar absolute pressure, 15 °C temperature) and are valid for G20 gas (net calorific value H_i = 34.02 MJ/Stm³), L.P.G. (net calorific value H_i = 93.5 MJ/Stm³)**
Note2:	**Maximum gas pressure = 360mbar (with Dungs MBDLE/MBC valves) = 500mbar (with Siemens VGD / Dungs MBCvalves)**

(*) NOTE ON THE WORKING SERVICE: the control box automatically stops after 24h of continuous working. The control box immediately starts up, automatically.

Overall dimensions (mm)

Burner: P61

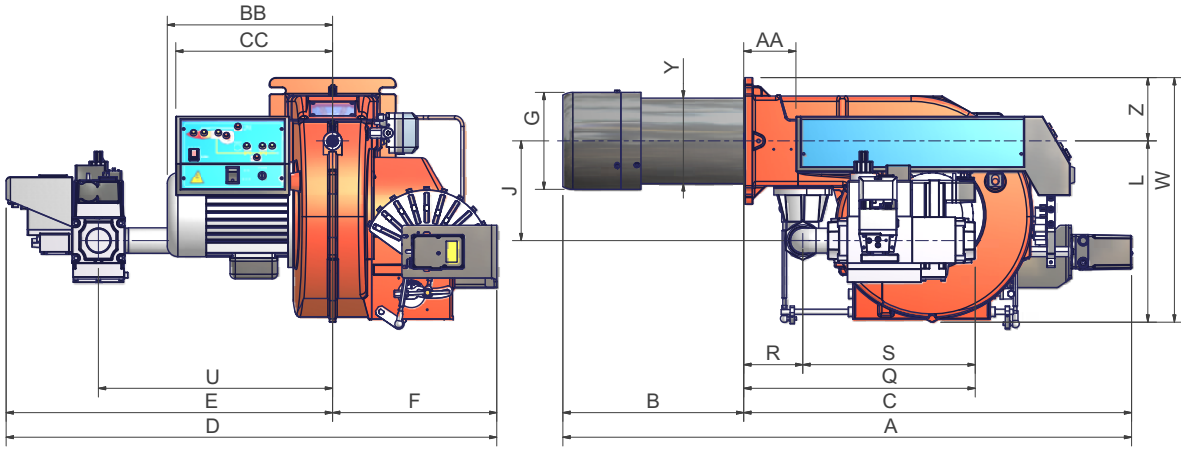

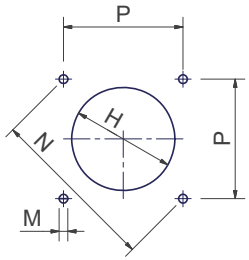

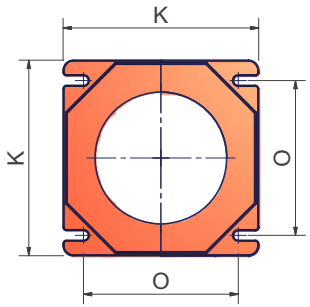

Boiler recommended drilling template and burner flange

B*: SPECIAL blast tube lengths must be agreed with **Cib Unigas**

	DN	A(S*)	A(L*)	AA	B(S*)	B(L*)	BB	C	CC	D	E	F	G	H	J	K	L	M	N	O	P	Q	R	S	U	V**	W	Y	Z
P61 PR - 0.32	32	1079	1169	99	343	433	314	736	298	812	500	312	184	204	210	240	344	M10	269	190	190	341	112	229	444	-	464	162	120
P61 MD - 0.32	32	1079	1169	99	343	433	314	736	298	812	500	312	184	204	210	240	344	M10	269	190	190	341	112	229	444	-	464	162	120
P61 AB - 0.32	32	1009	1099	99	343	433	314	666	298	812	500	312	184	204	210	240	344	M10	269	190	190	341	112	229	444	-	464	162	120
P61 PR - 0.40	40	1079	1169	99	343	433	314	736	298	812	500	312	184	204	210	240	344	M10	269	190	190	439	112	327	444	-	464	162	120
P61 MD - 0.40	40	1079	1169	99	343	433	314	736	298	812	500	312	184	204	210	240	344	M10	269	190	190	439	112	327	444	-	464	162	120
P61 AB - 0.40	40	1009	1099	99	343	433	314	666	298	812	500	312	184	204	210	240	344	M10	269	190	190	439	112	327	444	-	464	162	120
P61 PR - 0.50	50	1079	1169	99	343	433	314	736	298	812	500	312	184	204	210	240	344	M10	269	190	190	447	112	335	444	-	464	162	120
P61 MD - 0.50	50	1079	1169	99	343	433	314	736	298	812	500	312	184	204	210	240	344	M10	269	190	190	447	112	335	444	-	464	162	120
P61 AB - 0.50	50	1009	1099	99	343	433	314	666	298	812	500	312	184	204	210	240	344	M10	269	190	190	447	112	335	444	-	464	162	120
P61 PR - 0.65	65	1079	1169	99	343	433	314	736	298	997	685	312	184	204	250	240	420	M10	269	190	190	515	112	403	540	313	540	162	120
P61 MD - 0.65	65	1079	1169	99	343	433	314	736	298	997	685	312	184	204	250	240	420	M10	269	190	190	515	112	403	540	313	540	162	120
P61 AB - 0.65	65	1009	1099	99	343	433	314	666	298	997	685	312	184	204	250	240	420	M10	269	190	190	515	112	403	540	313	540	162	120

*S = measure referred to burner fitted with standard blast tube

*L = measure referred to burner fitted with extended blast tube

**V measure stands for the gas filter when not built-in the gas valves (VGD or MBC valves from DN65 on).

Note: the gas proving system is an option.

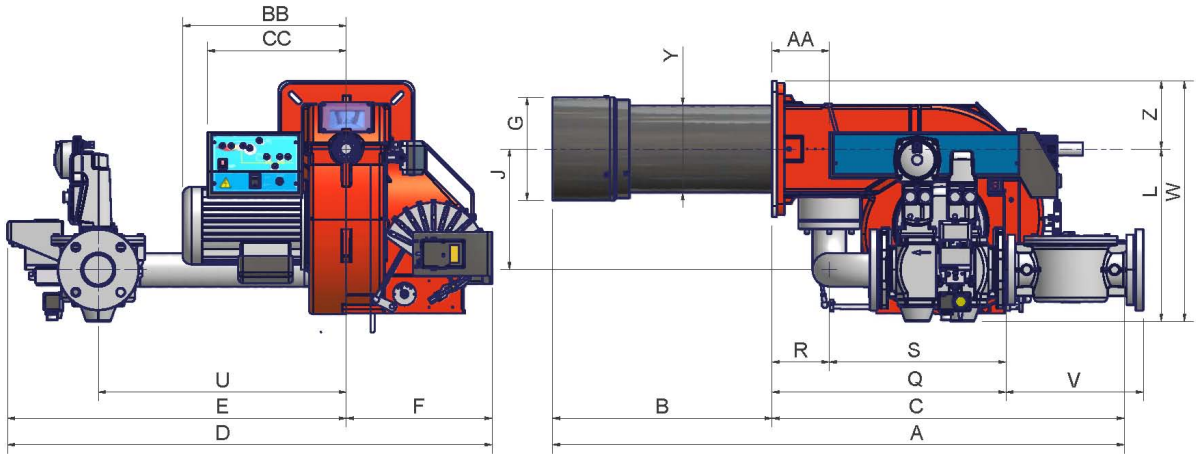

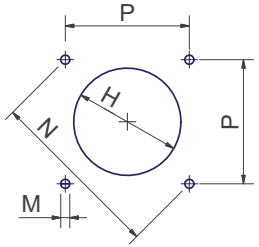

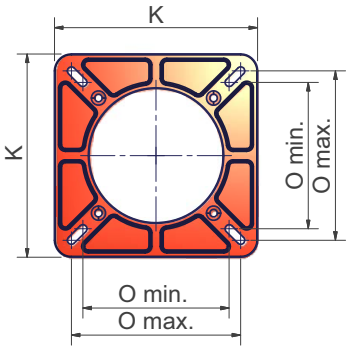

Boiler recommended drilling template and burner flange

B*: SPECIAL blast tube lengths must be agreed with **Cib Unigas**

	DN	A(S*)	A(L*)	AA	B(S*)	B(L*)	BB	C	CC	D	E	F	G	H	J	K	L	M	N	Omin	Omax	P	Q	R	S	U	V**	W	Y	Z
P65 PR - 0.32	32	1129	1219	130	326	416	373	803	316	900	568	332	184	228	208	300	376	M10	330	216	250	233	367	130	237	465	-	531	162	155
P65 PR - 1.32	32	1129	1219	130	326	416	373	803	316	1026	694	332	184	228	208	300	376	M10	330	216	250	233	367	130	237	465	-	531	162	155
P65 AB - 0.32	32	1129	1219	130	326	416	373	733	316	900	568	332	184	228	208	300	376	M10	330	216	250	233	367	130	237	465	-	531	162	155
P65 AB - 1.32	32	1129	1219	130	326	416	373	733	316	1026	694	332	184	228	208	300	376	M10	330	216	250	233	367	130	237	465	-	531	162	155
P65 MD - 0.32	32	1129	1219	130	326	416	373	803	316	900	568	332	184	228	208	300	376	M10	330	216	250	233	367	130	237	465	-	531	162	155
P65 MD - 1.32	32	1129	1219	130	326	416	373	803	316	1026	694	332	184	228	208	300	376	M10	330	216	250	233	367	130	237	465	-	531	162	155
P65 PR - 0.40	40	1129	1219	130	326	416	373	803	316	900	568	332	184	228	208	300	376	M10	330	216	250	233	465	130	335	465	-	531	162	155
P65 PR - 1.40	40	1129	1219	130	326	416	373	803	316	1026	694	332	184	228	208	300	376	M10	330	216	250	233	465	130	335	465	-	531	162	155
P65 AB - 0.40	40	1129	1219	130	326	416	373	733	316	900	568	332	184	228	208	300	376	M10	330	216	250	233	465	130	335	465	-	531	162	155
P65 AB - 1.40	40	1129	1219	130	326	416	373	733	316	1026	694	332	184	228	208	300	376	M10	330	216	250	233	465	130	335	465	-	531	162	155
P65 MD - 0.40	40	1129	1219	130	326	416	373	803	316	900	568	332	184	228	208	300	376	M10	330	216	250	233	465	130	335	465	-	531	162	155
P65 MD - 1.40	40	1129	1219	130	326	416	373	803	316	1026	694	332	184	228	208	300	376	M10	330	216	250	233	465	130	335	465	-	531	162	155
P65 PR - 0.50	50	1129	1219	130	326	416	373	803	316	900	568	332	184	228	208	300	376	M10	330	216	250	233	465	130	335	465	-	531	162	155
P65 PR - 1.50	50	1129	1219	130	326	416	373	803	316	1026	694	332	184	228	208	300	376	M10	330	216	250	233	465	130	335	465	-	531	162	155
P65 AB - 0.50	50	1129	1219	130	326	416	373	733	316	900	568	332	184	228	208	300	376	M10	330	216	250	233	465	130	335	465	-	531	162	155
P65 AB - 1.50	50	1129	1219	130	326	416	373	733	316	1026	694	332	184	228	208	300	376	M10	330	216	250	233	465	130	335	465	-	531	162	155
P65 MD - 0.50	50	1129	1219	130	326	416	373	803	316	900	568	332	184	228	208	300	376	M10	330	216	250	233	465	130	335	465	-	531	162	155
P65 MD - 1.50	50	1129	1219	130	326	416	373	803	316	1026	694	332	184	228	208	300	376	M10	330	216	250	233	465	130	335	465	-	531	162	155
P65 PR - 0.65	65	1129	1219	130	326	416	373	803	316	998	666	332	184	228	273	300	393	M10	330	216	250	233	533	130	403	533	313	548	162	155
P65 PR - 1.65	65	1129	1219	130	326	416	373	803	316	1104	772	332	184	228	273	300	393	M10	330	216	250	233	533	130	403	533	313	548	162	155
P65 AB - 0.65	65	1129	1219	130	326	416	373	733	316	998	666	332	184	228	273	300	393	M10	330	216	250	233	533	130	403	533	313	548	162	155
P65 AB - 1.65	65	1129	1219	130	326	416	373	733	316	1104	772	332	184	228	273	300	393	M10	330	216	250	233	533	130	403	533	313	548	162	155
P65 MD - 0.65	65	1129	1219	130	326	416	373	803	316	998	666	332	184	228	273	300	393	M10	330	216	250	233	533	130	403	533	313	548	162	155
P65 MD - 1.65	65	1129	1219	130	326	416	373	803	316	1104	772	332	184	228	273	300	393	M10	330	216	250	233	533	130	403	533	313	548	162	155

*S = measure referred to burner fitted with standard blast tube *L = measure referred to burner fitted with extended blast tube **V measure stands for the gas filter when not built-in the gas valves (VGD or MBC valves from DN65 on).

Note: the gas proving system is an option.

	DN	A(S*)	A(L*)	AA	B(S*)	B(L*)	BB	C	CC	D	E	F	G	H	J	K	L	M	N	Omin	Omax	P	Q	R	S	U	V**	W	Y(*S)	Y(*L)	Z
P71 PR - 0.40	40	1188	1298	130	385	495	373	803	316	900	568	332	234	264	208	300	376	M10	330	216	250	233	457	130	327	519	x	531	198	212	155
P71 PR - 1.40	40	1188	1298	130	385	495	373	803	316	1026	694	332	234	264	208	300	376	M10	330	216	250	233	457	130	327	519	x	531	198	212	155
P71 AB - 0.40	40	1118	1228	130	385	495	373	733	316	900	568	332	234	264	208	300	376	M10	330	216	250	233	457	130	327	519	x	531	198	212	155
P71 AB - 1.40	40	1118	1228	130	385	495	373	733	316	1026	694	332	234	264	208	300	376	M10	330	216	250	233	457	130	327	519	x	531	198	212	155
P71 MD - 0.40	40	1188	1298	130	385	495	373	803	316	900	568	332	234	264	208	300	376	M10	330	216	250	233	457	130	327	519	x	531	198	212	155
P71 MD - 1.40	40	1188	1298	130	385	495	373	803	316	1026	694	332	234	264	208	300	376	M10	330	216	250	233	457	130	327	519	x	531	198	212	155
P71 PR - 0.50	50	1188	1298	130	385	495	373	803	316	900	568	332	234	264	208	300	376	M10	330	216	250	233	465	130	335	519	x	531	198	212	155
P71 PR - 1.50	50	1188	1298	130	385	495	373	803	316	1026	694	332	234	264	208	300	376	M10	330	216	250	233	465	130	335	519	x	531	198	212	155
P71 AB - 0.50	50	1118	1228	130	385	495	373	733	316	900	568	332	234	264	208	300	376	M10	330	216	250	233	465	130	335	519	x	531	198	212	155
P71 AB - 1.50	50	1118	1228	130	385	495	373	733	316	1026	694	332	234	264	208	300	376	M10	330	216	250	233	465	130	335	519	x	531	198	212	155
P71 MD - 0.50	50	1188	1298	130	385	495	373	803	316	900	568	332	234	264	208	300	376	M10	330	216	250	233	465	130	335	519	x	531	198	212	155
P71 MD - 1.50	50	1188	1298	130	385	495	373	803	316	1026	694	332	234	264	208	300	376	M10	330	216	250	233	465	130	335	519	x	531	198	212	155
P71 PR - 0.65	65	1188	1298	130	385	495	373	803	316	998	666	332	234	264	275	300	393	M10	330	216	250	233	533	130	403	565	313	548	198	212	155
P71 PR - 1.65	65	1188	1298	130	385	495	373	803	316	1104	772	332	234	264	275	300	393	M10	330	216	250	233	533	130	403	565	313	548	198	212	155
P71 AB - 0.65	65	1118	1228	130	385	495	373	733	316	998	666	332	234	264	275	300	393	M10	330	216	250	233	533	130	403	565	313	548	198	212	155
P71 AB - 1.65	65	1118	1228	130	385	495	373	733	316	1104	772	332	234	264	275	300	393	M10	330	216	250	233	533	130	403	565	313	548	198	212	155
P71 MD - 0.65	65	1188	1298	130	385	495	373	803	316	998	666	332	234	264	275	300	393	M10	330	216	250	233	533	130	403	565	313	548	198	212	155
P71 MD - 1.65	65	1188	1298	130	385	495	373	803	316	1104	772	332	234	264	275	300	393	M10	330	216	250	233	533	130	403	565	313	548	198	212	155
P71 PR - 0.80	80	1188	1298	130	385	495	373	803	316	998	666	332	234	264	275	300	407	M10	330	216	250	233	574	130	444	565	344	562	198	212	155
P71 PR - 1.80	80	1188	1298	130	385	495	373	803	316	1106	774	332	234	264	275	300	407	M10	330	216	250	233	574	130	444	565	344	562	198	212	155
P71 AB - 0.80	80	1118	1228	130	385	495	373	733	316	998	666	332	234	264	275	300	407	M10	330	216	250	233	574	130	444	565	344	562	198	212	155
P71 AB - 1.80	80	1118	1228	130	385	495	373	733	316	1106	774	332	234	264	275	300	407	M10	330	216	250	233	574	130	444	565	344	562	198	212	155
P71 MD - 0.80	80	1188	1298	130	385	495	373	803	316	998	666	332	234	264	275	300	407	M10	330	216	250	233	574	130	444	565	344	562	198	212	155
P71 MD - 1.80	80	1188	1298	130	385	495	373	803	316	1106	774	332	234	264	275	300	407	M10	330	216	250	233	574	130	444	565	344	562	198	212	155

*S = measure referred to burner fitted with standard blast tube

*L = measure referred to burner fitted with extended blast tube

** measure “V” refers to gas filter dimensions, whenit is not built-in in the gas valves (i.e. VGD gas valves or MBC valves from DN65 on).

How to read the burner "Performance curve"

To check if the burner is suitable for the boiler to which it must be installed, the following parameters are needed:

- furnace input, in kW or kcal/h (kW = kcal/h/860);
- backpressure (data are available on the boiler ID plate or in the user's manual).

Example:

Furnace input: 600kW

Backpressure: 4 mbar

In the "Performance curve" diagram, draw a vertical line matching the furnace input value and an horizontal line matching the backpressure value. The burner is suitable if the intersection point A is inside the performance curve.
Data are referred to standard conditions: atmospheric pressure at 1013 mbar, ambient temperature at 15° C.

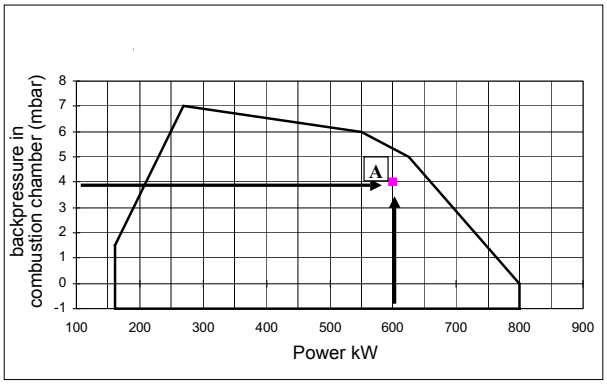

Checking the proper gas train size

To check the proper gas train size, it is necessary to the available gas pressure value upstream the burner's gas valve. Then subtract the backpressure. The result is called **pgas.** Draw a vertical line matching the furnace input value (600kW, in the example), quoted on the x-axis, as far as intercepitng the network pressure curve, according to the installed gas train (DN65, in the example). From the interception point, draw an horizontal line as far as matching, on the y-axis, the value of pressure necessary to get the requested furnace input. This value must be lower or equal to the **pgas** value, calculated before.

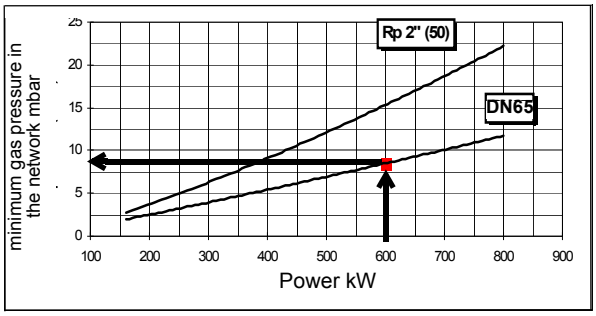

Performance Curves

P61

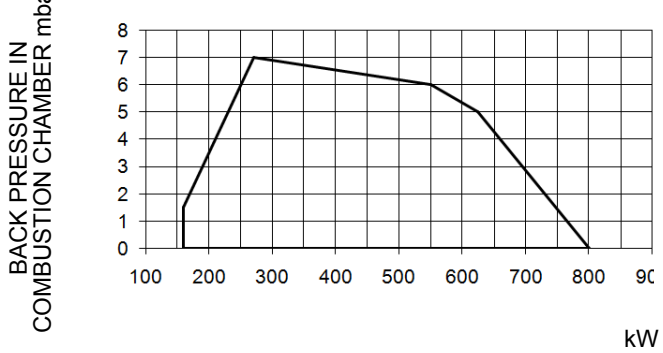

P65

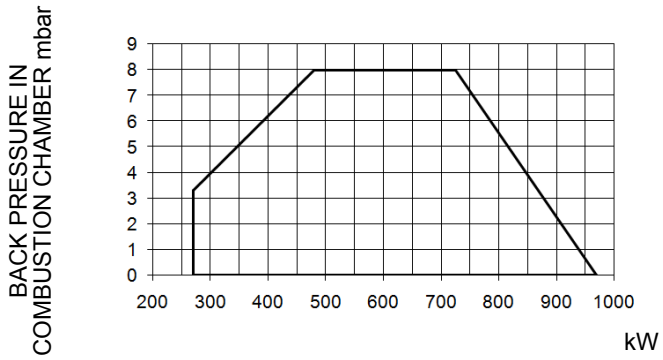

P71 ..0.xx

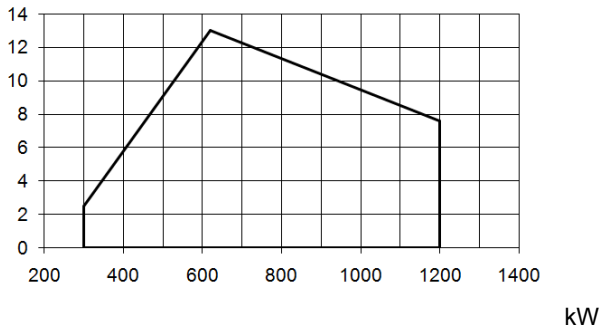

P71 ..1.xx

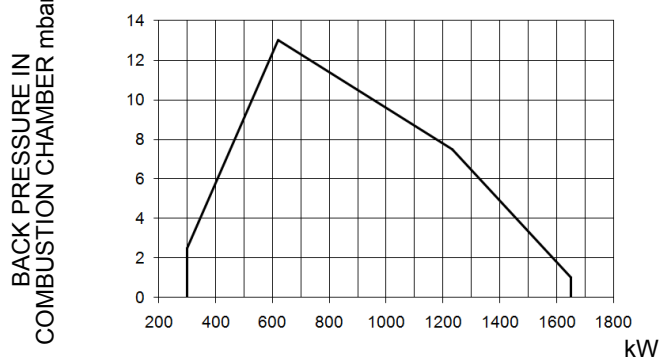

To get the input in kcal/h, multiply value in kW by 860.

Data are referred to standard conditions: atmospheric pressure at 1013mbar, ambient temperature at 15° C

NOTE: The performance curve is a diagram that represents the burner performance in the type approval phase or in the laboratory tests, but does not represent the regulation range of the machine. On this diagram the maximum output point is usually reached by adjsuting the combustion head to its “MAX” position (see paragraph “Adjusting the combustion head”); the minimum output point is reached setting the combustion head to its “MIN” position. During the first ignition, the combustion head is set in order to find a compromise between the burner output and the generator specifications, that is why the minimum output may be different from the Performance curve minimum

Pressure in the Network / gas flow rate curves

- ***Natural Gas burners***

P61 M-..

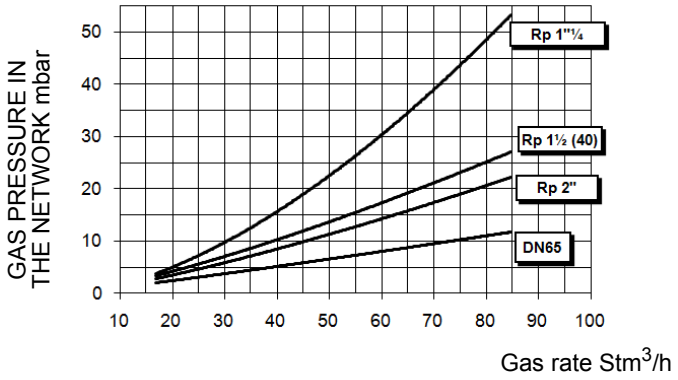

P65 M-...

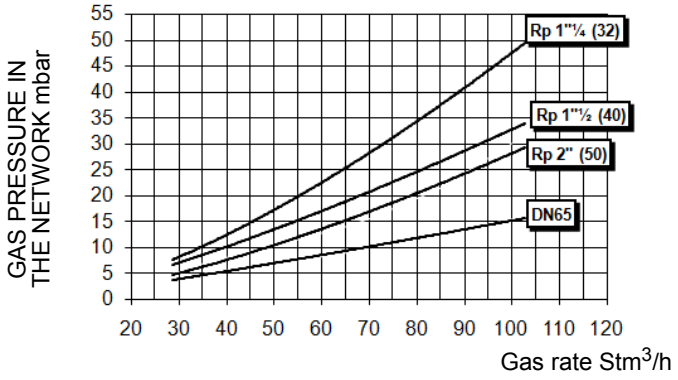

P71 M-...0.xx

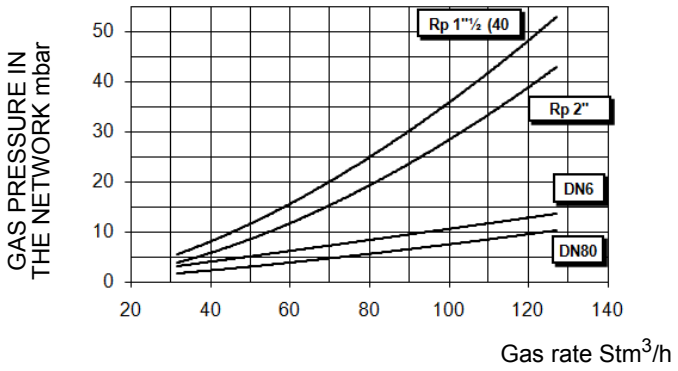

P71 M-...1.xx

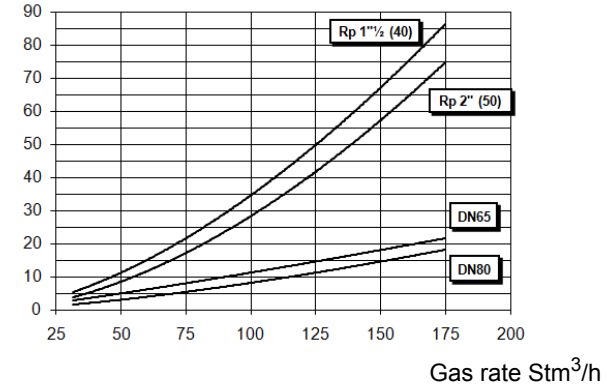

ATTENTION: the gas rate value is quoted on the x-axis, the related network pressure is quoted on the y-axis (pressure value in the combustion chamber is not included). To know the minimum pressure at the gas train inlet, necessary to get the requested gas rate, add the pressure value in the combustion chamber to the value read on the y-axis.

Pressure in the Network / gas flow rate curves

- ***L.P.G. Burners***

P61 L-..

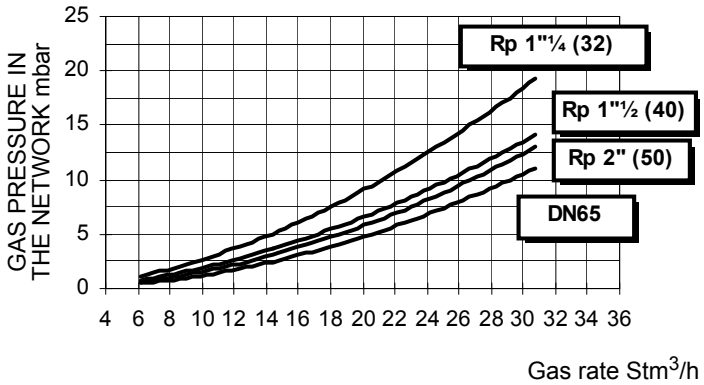

P65 L-..

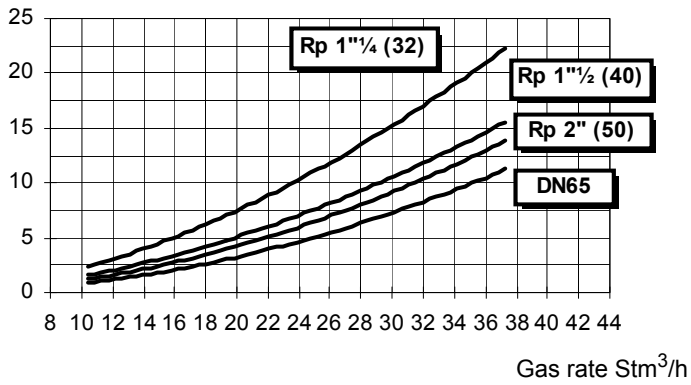

P71 L-...0.xx

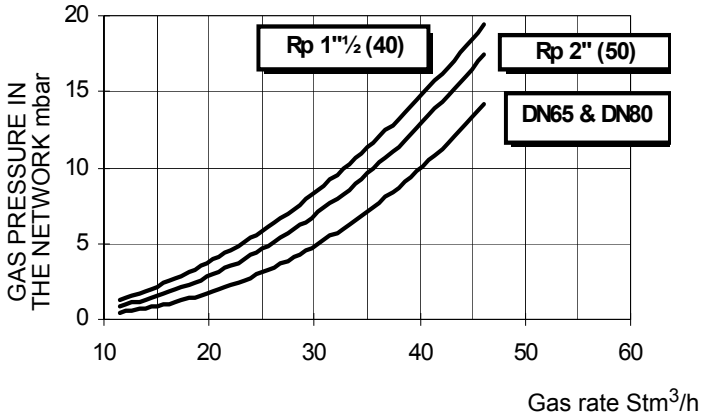

P71 L-...1.xx

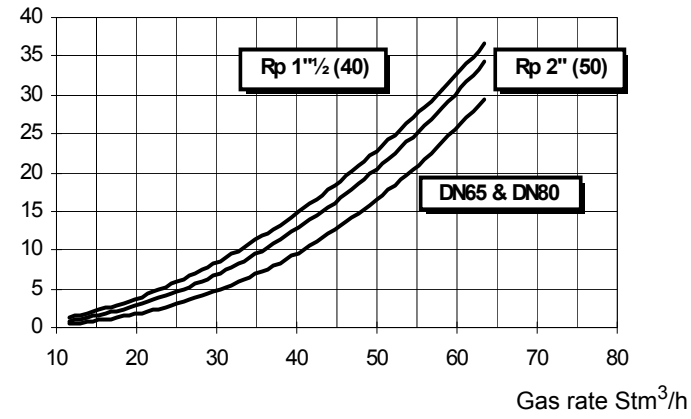

ATTENTION: the gas rate value is quoted on the x-axis, the related network pressure is quoted on the y-axis (pressure value in the combustion chamber is not included). To know the minimum pressure at the gas train inlet, necessary to get the requested gas rate, add the pressure value in the combustion chamber to the value read on the y-axis.

Combustion head gas pressure curves

Combustion head gas pressure depends on gas flow and combustion chamber backpressure. When backpressure is subtracted, i depends only on gas flow, provided combustion is properly adjusted, flue gases residual O2 percentage complies with “Recommendec combustion values” table and CO in the standard limits). During this stage, the combustion head, the gas butterfly valve and the actuator are at the maximum opening. Refer to , showing the correct way to measure the gas pressure, considering the values o pressure in combustion chamber, surveyed by means of the pressure gauge or taken from the boiler’s Technical specifications.
.

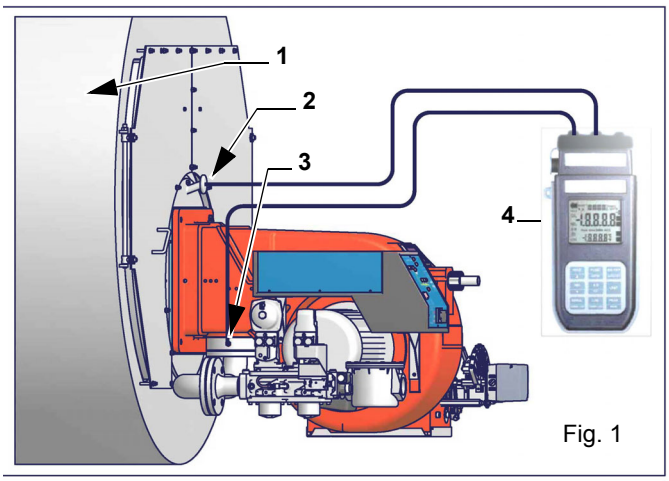

Fig. 1

Note: the figure is indicative only.
Key
1 Generator
2 Pressure outlet on the combustion chamber
3 Gas pressure outlet on the butterfly valve
4 Differential pressure gauge

ATTENTION: THE BURNED GAS RATE MUST BE READ AT THE GAS FLOW METER. WHEN IT IS NOT POSSIBLE, THE USER CAN REFERS TO THE PRESSURE-RATE CURVES AS GENERAL INFORMATION ONLY.

Measuring gas pressure in the combustion head

In order to measure the pressure in the combustion head, insert the pressure gauge probes: one into the combustion chamber’s pressure outlet to get the pressure in the combustion chamber and the other one into the butterfly valve’s pressure outlet of the burner. On the basis of the measured differential pressure, it is possible to get the maximum flow rate: in the pressure - rate curves (showed on the next paragraph), it is easy to find out the burner’s output in Stm^3/h (quoted on the x axis) from the pressure measured in the combustion head (quoted on the y axis). The data obtained must be considered when adjusting the gas flow rate.

Pressure - rate in combustion head curves (natural gas)

Curves are referred to pressure = 0 mbar in the combustion chamber!

- ***Natural Gas burners***

P61 M-

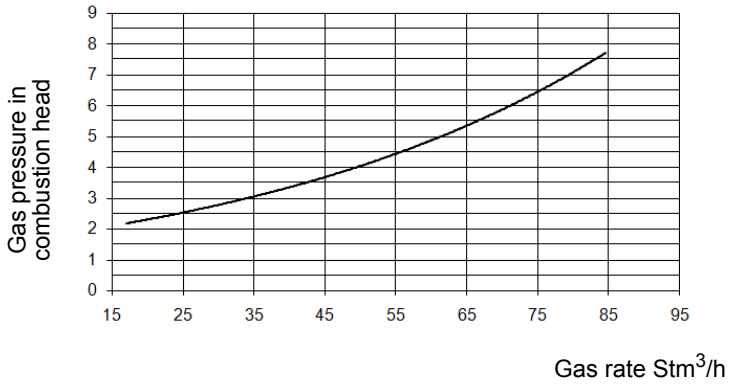

P65 M-

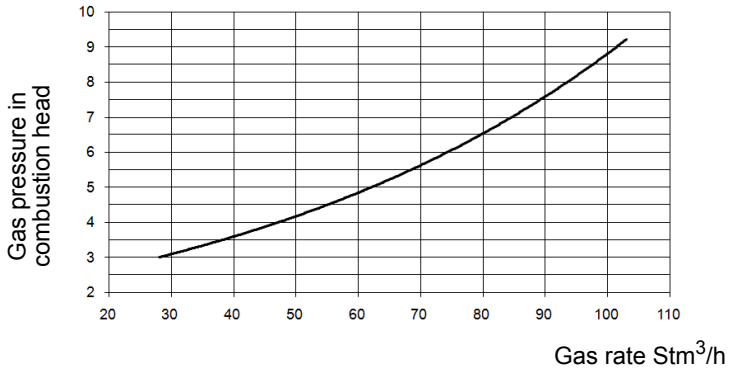

P71 M-...0.xx

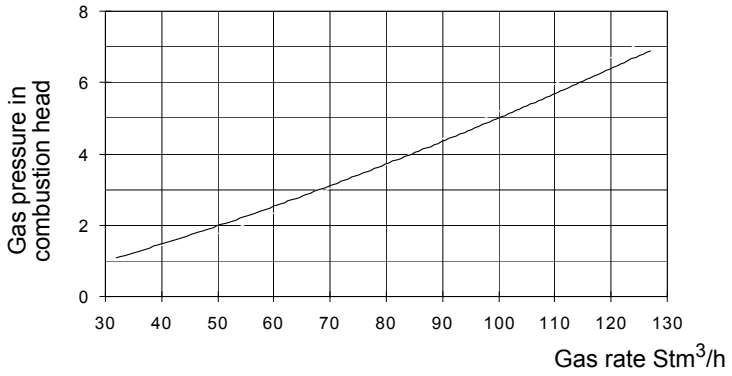

P71 M-...1.xx

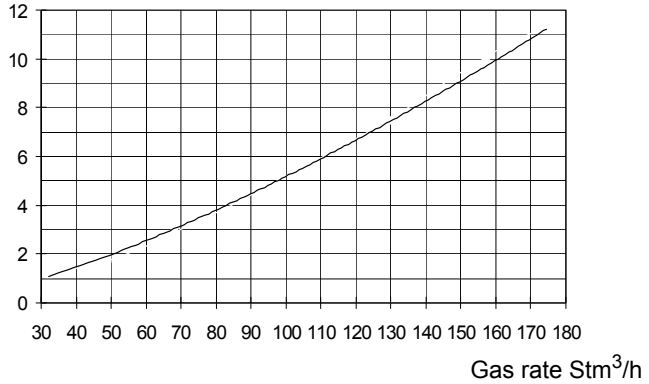

Pressure - rate in combustion head curves (LPG)

Curves are referred to pressure = 0mbar in the combustion chamber!

P61 L-..

P65 L-..

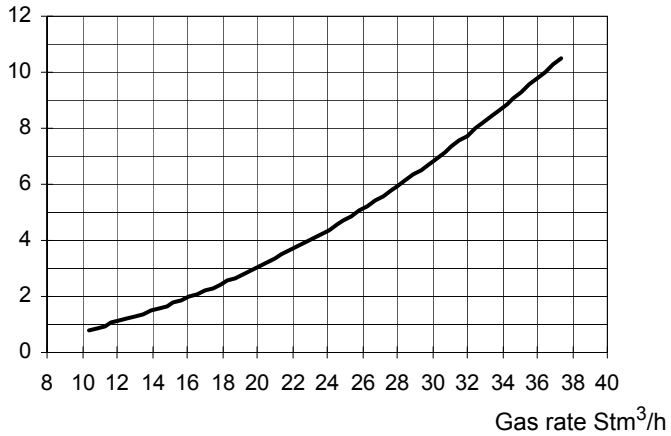

P71 L-...0.xx

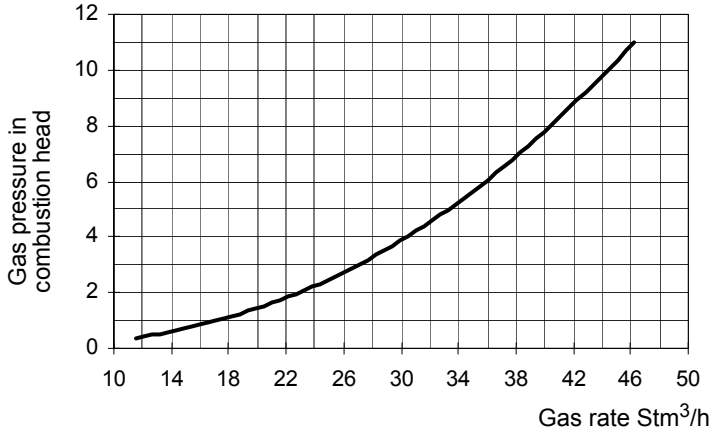

P71 L-...1.xx

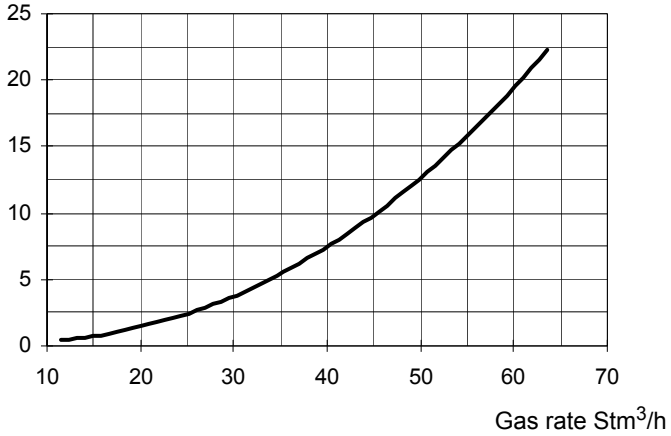

PART II: INSTALLATION

MOUNTING AND CONNECTING THE BURNER

Transport and storage

ATTENTION! The equipment must be installed in compliance with the regulations in force, following the manufacturer's instructions, by qualified personnel. All handling operations must be carried out with appropriate resources and qualified personnel

ATTENTION: Use intact and correctly dimensioned hoisting equipment, conforms to the local regulations and health and safety regulations. Do not stand under lifted loads.

If the product must be stored, avoid humid and corrosive places. Observe the temperatures stated in the burner data table at the beginning of this manual. The packages containing the burners must be locked inside the means of transport in such a way as to guarantee the absence of dangerous movements and avoid any possible damage.

In case of storage, the burners must be stored inside their packaging, in storerooms protected from the weather. Avoid humid or corrosive places and respect the temperatures indicated in the burner data table at the beginning of this manual.

Packing

The burners are despatched in wooden crates whose dimensions are:

- P61: 1200mm x 670mm x 540mm (L x P x H).
- P65 - P71 - : 1280mm x 850mm x 760mm (L x P x H).

Packing cases of this type are affected by humidity and are not suitable for stacking.

The following are placed in each packing case:

- burner with detached gas train;
- gasket or ceramic fibre plait (according to burner type) to be inserted between the burner and the boiler;
- envelope containing this manual and other documents.

To get rid of the burner's packing, follow the procedures laid down by current laws on disposal of materials.

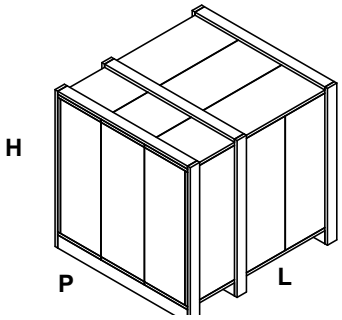

Handling the burner

WARNING! The handling operations must be carried out by specialised and trained personnel. If these operations are not carried out correctly, the residual risk for the burner to overturn and fall down still persists.

To move the burner, use means suitable to support its weight (see paragraph "Technical specifications").

Fitting the burner to the boiler

To install the burner into the boiler, proceed as follows:
make a hole on the closing door of the combustion chamber as described on paragraph "Overall dimensions")
place the burner to the boiler: lift it up and handle it according to the procedure described on paragraph "Handling the burner";
place the 4 stud bolts (5), according to the burner's drilling plate described on paragraph "Overall dimensions";
fasten the 4 stud bolts;
place the ceramic fibre plait on the burner flange;
install the burner into the boiler;
fix the burner to the stud bolts, by means of the fixing nuts, according to the next picture.
After fitting the burner to the boiler, ensure that the gap between the blast tube and the refractory lining is sealed with appropriate insulating material (ceramic fibre cord or refractory cement).

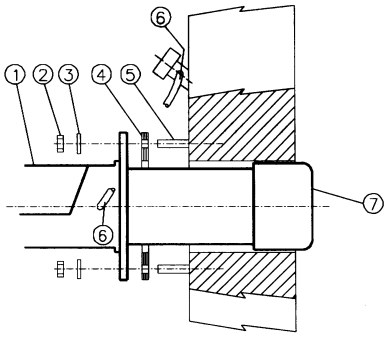

Keys

1 Burner
2 Fixing nut
3 Washer
4 Ceramic fibre plait
5 Stud bolt
7 Blast tube

The burner is designed to work positioned according to the picture below. For different installations, please contact the Technical Department.

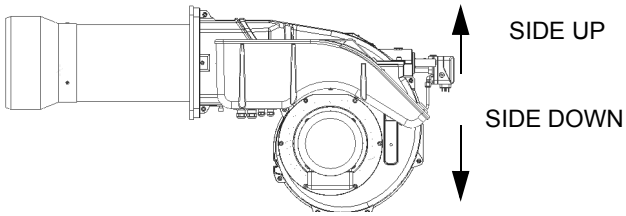

Note: the figure is indicative only.

Matching the burner to the boiler

The burners described in this manual have been tested with combustion chambers that comply with EN676 regulation and whose dimensions are described in the diagram . In case the burner must be coupled with boilers with a combustion chamber smaller in diameter or shorter than those described in the diagram, please contact the supplier, to verify that a correct matching is possible, with respect of the application involved. To correctly match the burner to the boiler verify the type of the blast tube . Verify the necessary input and the pressure in combustion chamber are included in the burner performance curve; otherwise the choice of the burner must be revised consulting the burner manufacturer. To choose the blast tube lenght follow the instructions of the boiler manufacturer. In absence of these consider the following:

- Cast-iron boilers, three pass flue boilers (with the first pass in the rear part): the blast tube must protrude no more than **Dist** = 100 mm into the combustion chamber. (please see the picture below)
- Pressurised boilers with flame reversal: in this case the blast tube must penetrate **Dm** 50 ÷ 100 mm into combustion chamber in respect to the tube bundle plate.(please see the picture below)

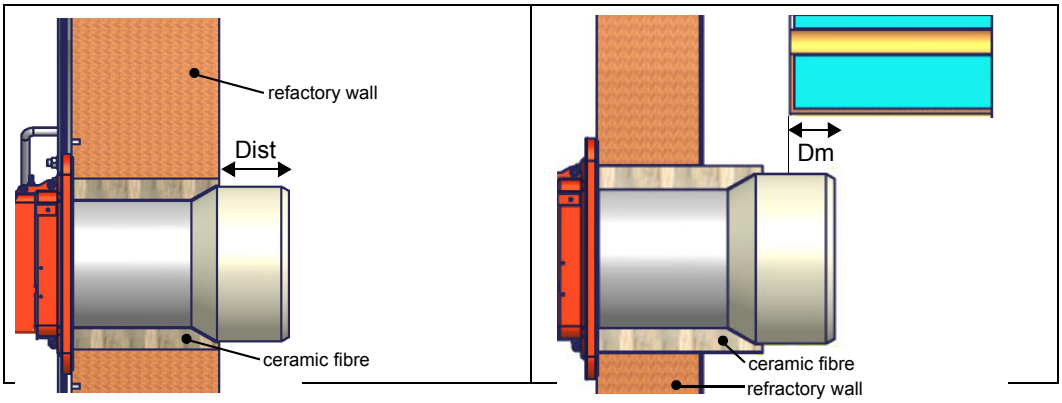

WARNING! Carefully seal the free space between blast tube and the refractory lining with ceramic fibre rope or other suitable means.

The length of the blast tubes does not always allow this requirement to be met, and thus it may be necessary to use a suitably-sized spacer to move the burner backwards or to design a blast tube tha suites the utilisation (please, contact the manifacturer).

GAS TRAIN CONNECTIONS

The diagrams show the components of the gas trai included in the delivery and which must be fitted by the installer.The diagrams are in compliance with the current laws.

Gas train with valves group MB-DLE (2 valves + gas filter + pressure governor) + VPS504 gas proving system

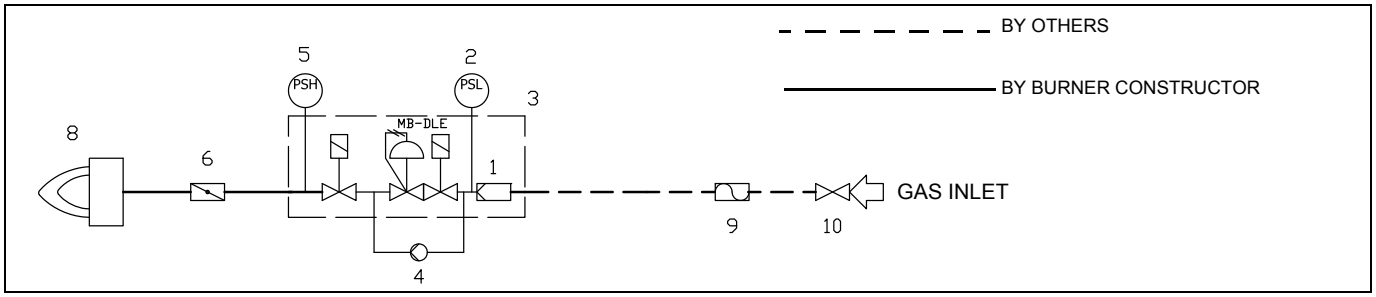

Key

1	Filter	6	Butterfly valve
2	Pressure switch - PGMIN	8	Main burner
3	Safety valve with built in gas governor	9	Bellows unit(*optional)
4	Proving system (*optional)	10	Manual valve(*optional)
5	Pressure switch - PGMAX (*optional)		

Gas train with valves group VGD with built-in gas pressure governor + gas proving system VPS504

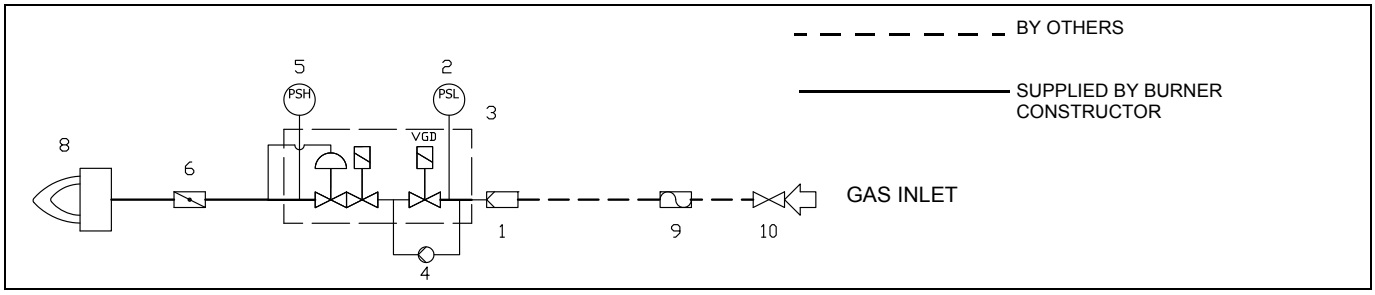

Key

1	Filter (*optional)	6	Butterfly valve
2	Pressure switch - PGMIN	8	Main burner
3	Safety valve with built in gas governor	9	Bellows unit(*optional)
4	Proving system (*optional)	10	Manual valve(*optional)
5	Pressure switch - PGMAX (*optional VGD-MBDLE, included MBE)		

GAS TRAIN CONNECTIONS

The diagrams show the components of the gas trai included in the delivery and which must be fitted by the installer.The diagrams are in compliance with the current laws.

Procedure to install the double gas valve unit:

- two (2) gas flanges are required; they may be threaded or not depending on size;

- first step: install the flanges to prevent the entry of foreign bodies in the gas line;

- on the gas pipe, clean the already assembled parts and then install the valve unit;

- check gas flow direction: it must follow the arrow on the valve body;

- VGD20: make sure the O-rings are correctly positioned between the flanges and the valve;

- VGD40 and MBE: make sure the gaskets are correctly positioned between the flanges;

- fasten all the components with screws, according to the following diagrams;

- make sure bolts on the flanges are properly tightened;

WARNING: before executing the connections to the gas pipe network, be sure that the manual cutoff valves are closed.

ATTENTION: it is recommended to mount filter and gas valves to avoid that extraneous material drops inside the valves, during maintenance and cleaning operation of the filters (both the filters outside the valves group and the ones built-in the gas valves).

ATTENTION: once the gas train is mounted according to the diagram on Fig. 1, the gas proving test mus be performed, according to the procedure set by the laws in force.

MultiBloc MB-DLE - *Assembling the gas train*

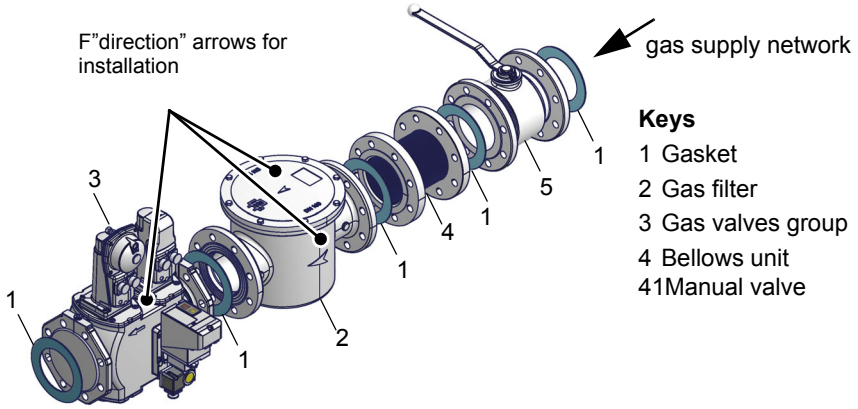

Keys

1 Gasket
2 Gas filter
3 Gas valves group
4 Bellows unit
41Manual valve

MULTIBLOC DUNGS MB-DLE 405..412

Mounting

1. Mount flange onto tube lines: use appropriate sealing agent (see Fig. 4);
2. insert MB-DLE: note position of O rings (see Fig. 4);
3. tighten screws A, B, C and D (Fig. 2 - Fig. 3), accordind to the mounting positions (Fig. 5);
4. after installation, perform leakage and functional test;
5. disassembly in reverse order.

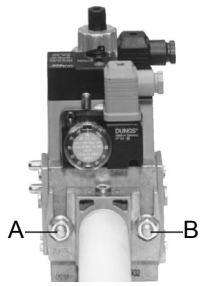

Fig. 2

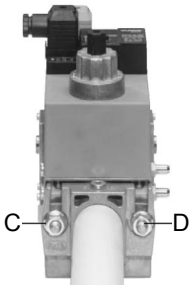

Fig. 3

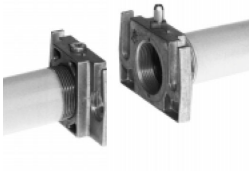

Fig. 4

MOUNTING POSITIONS

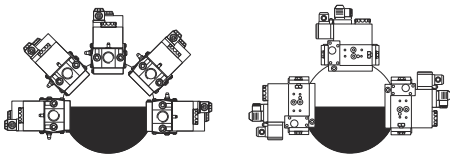

Fig. 5

MULTIBLOC DUNGS MB-DLE 415..420

Mounting

1. Loosen screws A and B **do not** unscrew (Fig. 6 - Fig. 7).
2. unscrew screws C and D (Fig. 6 - Fig. 7).
3. Remove MultiBloc between the threaded flanges (Fig. 7).
4. After mounting, perform leakage and functional tests.

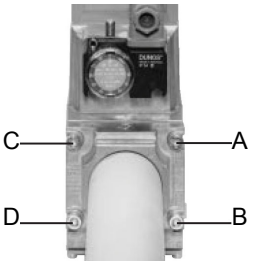

Fig. 6

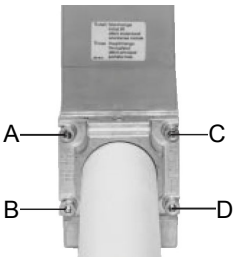

Fig. 7

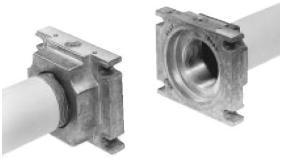

Fig. 8

MOUNTING POSITIONS

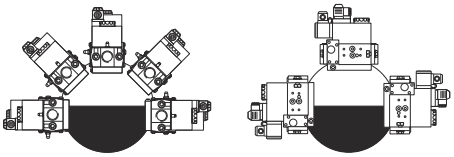

Fig. 9

MultiBloc MBE

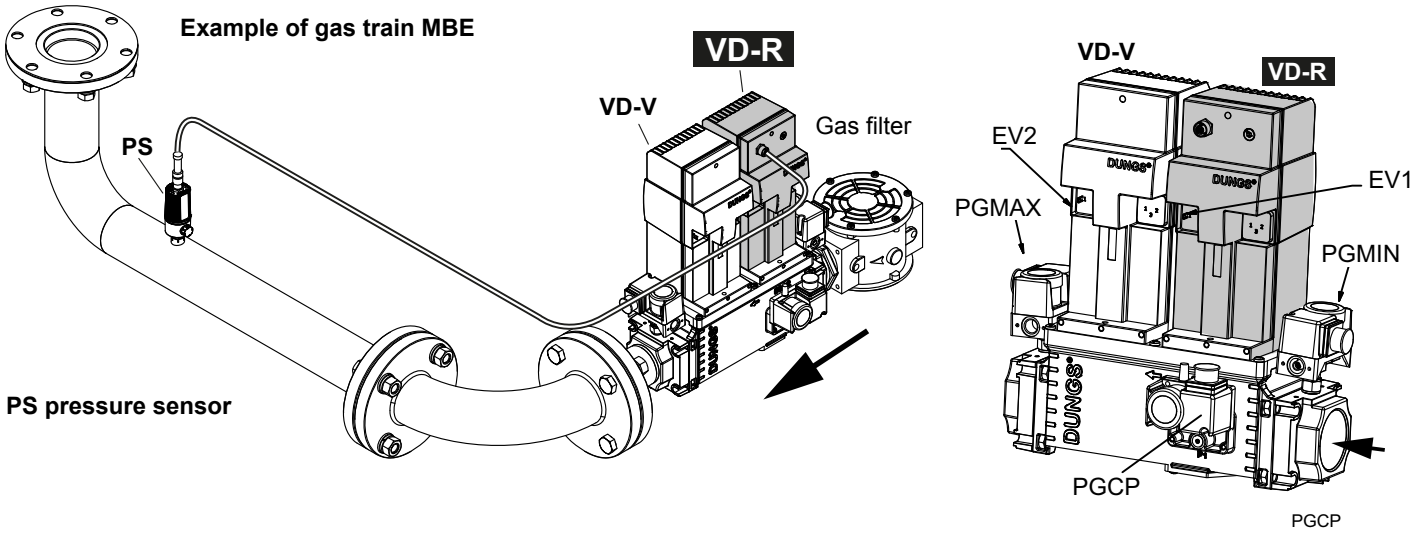

ATTENTION: once the gas train is mounted according, the gas proving test mus be performed, according to the procedure set by the laws in force.

ATTENTION: it is recommended to mount filter and gas valves to avoid that extraneous material drops inside the valves, during maintenance and cleaning operation of the filters (both the filters outside the valves group and the ones built-in the gas valves).

WARNING: Slowly open the fuel cock to avoid breaking the pressure regulator.

Threaded train with MultiBloc MBE - Mounting

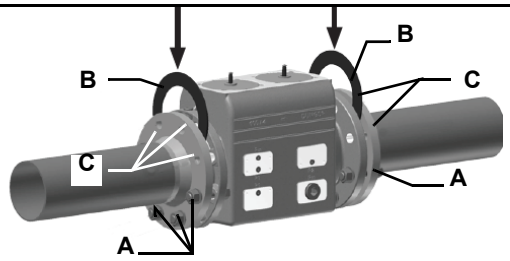

1. Insert studs A.
2. Insert seals B.
3. Insert studs C.
4. Tighten studs in accordance with section 8.

Ensure correct position of the seal!

5. Perform leak and functional tests after mounting.
6. Screws (4xM5x20) for VD assembly are supplied.

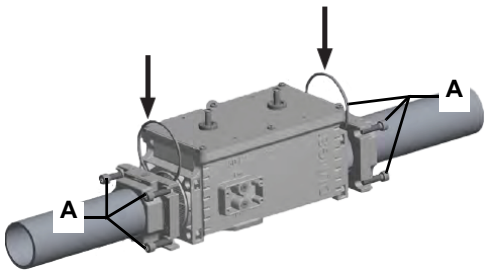

1. Mount flange into pipe systems. Use appropriate sealing agent.
2. Insert VB together with supplied O-rings.
Check current position of O-rings.
3. Tighten supplied screws (8xM8x30) in accordance with section 8.
4. Screws (4xM5x25) for VD assembly are supplied.
5. After installation, perform leakage and functional test.
6. Disassembly in reverse order.

Mounting position MBE / VB / VD

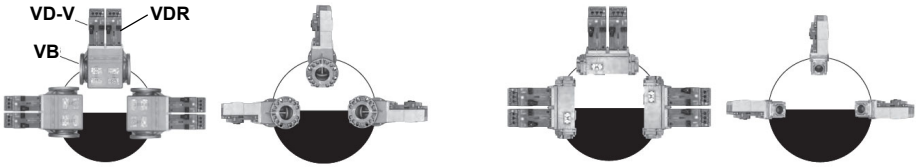

Mounting VD-R & PS-...

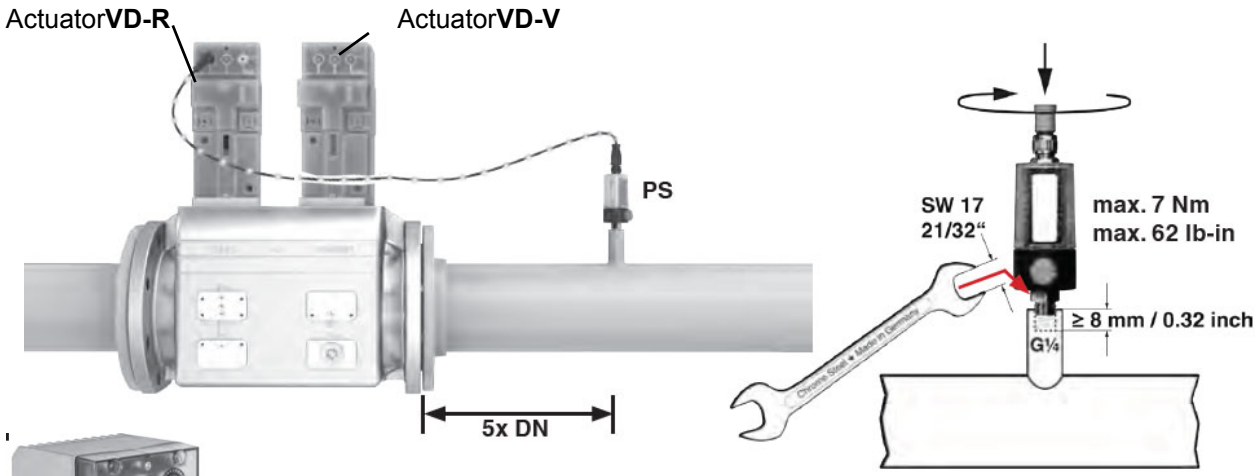

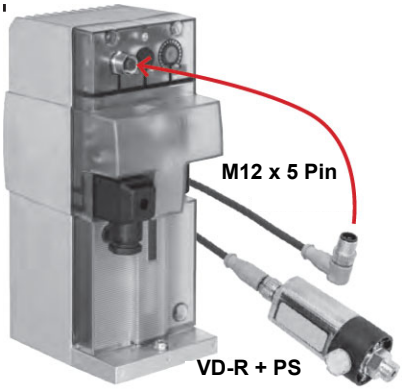

- The actuator **VD-V** does not need any adjustment (funzione ON-OFF)
- The actuator **VD-R** It must be combined with the **PS** sensor (include regolatore di pressione)
- The **PS sensor** chosen based on the necessary pressure (there are 3 models)

1. Gas pressure regulation is possible with VD-R and PS pressure sensor only.
WARNING! For US/CN installation, the output pressure must be monitoried by min. and max. pressure switches set to +/- 20% of the setpoint.
2. Mounting on pipe. Sensor position: 5x DN according to MBE. Pipe fitting with female thread size ¼, mount sensor with seal, observe torque.
3. The pressure sensor includes a vent limiter according to UL 353 and ANSI Z21.18/CSA 6.3. No venting required in locations where vent limiters are accepted by the jurisdiction.
4. Only PS pressure sensors specified by DUNGS are authorised to be connected to the VD-R's M12 interface.
5. Only PS cables specified by DUNGS are authorised to be used to connect the PS to the VD-R. Max. cable length 3 m.

Gas Proving System VPS504 (Option)

The VPS504 check the operation of the seal of the gas shut off valves. This check, carried out as soon as the boiler thermostat gives a start signal to the burner, creates, by means of the diaphragm pump inside it, a pressure in the test space of 20 mbar higher than the supply pressure.
When wishing to monitor the test, install a pressure gauge ranged to that of the pressure supply point **PA**. If the test cycle is satisfactory, after a few seconds the consent light **LC** (yellow) comes on. In the opposite case the lockout light **LB** (red) comes on. To restart it is necessary to reset the appliance by pressing the illuminated pushbutton **LB**.

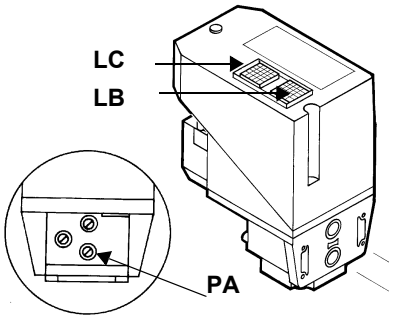

ELECTRICAL CONNECTIONS

WARNING! Respect the basic safety rules. make sure of the connection to the earthing system. do not reverse the phase and neutral connections. fit a differential thermal magnet switch adequate for connection to the mains.

WARNING! before executing the electrical connections, pay attention to turn the plant's switch to OFF and be sure that the burner's main switch is in 0 position (OFF) too. Read carefully the chapter "WARNINGS", and the "Electrical connections" section.

ATTENTION: Connecting electrical supply wires to the burner teminal block MA, be sure that the ground wire is longer than phase and neutral ones.

5 To execute the electrical connections, proceed as follows:

1 remove the cover from the electrical board, unscrewing the fixing screws;

2 execute the electrical connections to the supply terminal board as shown in the attached wiring diagrams;

3 check the direction of the fan motor (see next paragraph);

4 refit the panel cover.

WARNING: (only for double stage and progressive burners) The burner is provided with an electrical bridge between terminals 6 and 7; when connecting the high/low flame thermostat, remove this bridge before connecting the thermostat.

Rotation of electric motor

Once the electrical connection of the burner is executed, remember to check the rotation of the electric motor. The motor should rotate according to the "arrow" symbol on the body. In the event of wrong rotation, reverse the three-phase supply and check again the rotation of the motor.

CAUTION: check the motor thermal cut-out adjustment

NOTE: the burners are supplied for three-phase 380 V or 400 V supply, and in the case of three-phase 220 V or 230 V supply it is necessary to modify the electrical connections into the terminal box of the electric motor and replace the overload tripped relay.

Note on elecrtical supply

In the case where the power supply of the AUXILIARIES of the phase-phase burner (without a neutral), for the flame detection it is necessary to connect the RC circuit Siemens between the terminal 2 (terminal X3-04-4 in case of LMV2x, LMV3x, LMV5x, LME7x) of the base and the earth terminal, RC466890660. For LMV5 control box, please refer to the clabeling recommendations avaible on the Siemens CD attached to the burner

Key

C - Capacitor (22 nF , 250 V)
LME / LMV - Siemens control box
R - Resistor (1MΩ)
M: Terminal 2 (LGB, LME), Terminal X3-04-4 (LMV2x, LMV3x, LMV5, LME7x)
RC466890660 - RC Siemens filter

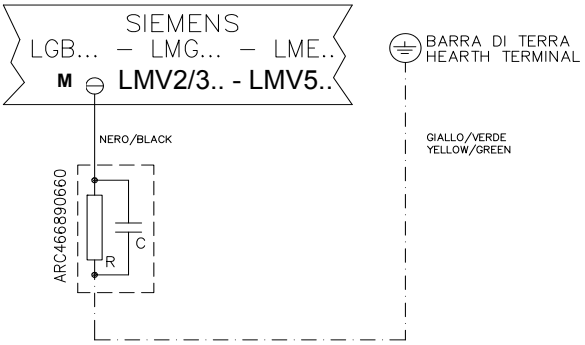

PART III: OPERATION

DANGER! Incorrect motor rotation can seriously damage property and injure people.WARNING: before starting the burner up, be sure that the manual cutoff valves are open and check that the pressure upstream the gas train complies the value quoted on paragraph "Technical specifications". Be sure that the mains switch is closed.

DANGER: During commissioning operations, do not let the burner operate with insufficient air flow (danger of formation of carbon monoxide); if this should happen, make the gas decrease slowly until the normal combustion values are achieved.WARNING: never loose the sealed screws! otherwise, the device warranty will be immediately invalidate!

LIMITATIONS OF USE

THE BURNER IS AN APPLIANCE DESIGNED AND CONSTRUCTED TO OPERATE ONLY AFTER BEING CORRECTLY CONNECTED TO A HEAT GENERATOR (E.G. BOILER, HOT AIR GENERATOR, FURNACE, ETC.), ANY OTHER USE IS TO BE CONSIDERED IMPROPER AND THEREFORE DANGEROUS.

THE USER MUST GUARANTEE THE CORRECT FITTING OF THE APPLIANCE, ENTRUSTING THE INSTALLATION OF IT TO QUALIFIED PERSONNEL AND HAVING THE FIRST COMMISSIONING OF IT CARRIED OUT BY A SERVICE CENTRE AUTHORISED BY THE COMPANY MANUFACTURING THE BURNER.

A FUNDAMENTAL FACTOR IN THIS RESPECT IS THE ELECTRICAL CONNECTION TO THE GENERATOR'S CONTROL AND SAFETY UNITS (CONTROL THERMOSTAT, SAFETY, ETC.) WHICH GUARANTEES CORRECT AND SAFE FUNCTIONING OF THE BURNER.

THEREFORE, ANY OPERATION OF THE APPLIANCE MUST BE PREVENTED WHICH DEPARTS FROM THE INSTALLATION OPERATIONS OR WHICH HAPPENS AFTER TOTAL OR PARTIAL TAMPERING WITH THESE (E.G. DISCONNECTION, EVEN PARTIAL, OF THE ELECTRICAL LEADS, OPENING THE GENERATOR DOOR, DISMANTLING OF PART OF THE BURNER).

NEVER OPEN OR DISMANTLE ANY COMPONENT OF THE MACHINE EXCEPT FOR ITS MAINTENANCE.

TO SECURE THE MACHINE, ACT ON THE ISOLATOR SWITCH. IN CASE OF ANOMALIES THAT REQUIRED A SHUT DOWN OF THE BURNER, IT'S POSSIBLE TO ACT ON THE AUXILIARY LINE SWITCH, LOCATED ON THE BURNER FRONT PANEL.

IN CASE OF A BURNER SHUT-DOWN, RESET THE CONTROL BOX BY MEANS OF THE RESET PUSHBUTTON. IF A SECOND SHUT-DOWN TAKES PLACE, CALL THE TECHNICAL SERVICE, WITHOUT TRYING TO RESET FURTHER.

WARNING: DURING NORMAL OPERATION THE PARTS OF THE BURNER NEAREST TO THE GENERATOR (COUPLING FLANGE) CAN BECOME VERY HOT, AVOID TOUCHING THEM SO AS NOT TO GET BURNT.

Fig. 10 - Burner front panel

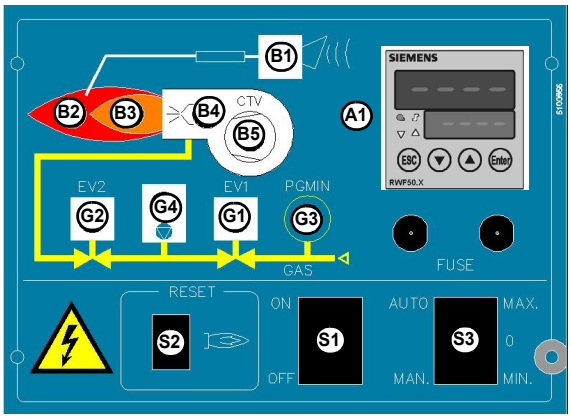

Keys

A1 Burner Modulator (only on fully modulating burners)
B1 Lock-out LED
B2 Hi-flame operation LED
B3 Lo-flame operation LED
B4 “Ignition transformer operation” LED
B5 “Fan motor overload tripped” LED
G1 “EV2 opening” LED
G2 “EV1 opening” LED
G3 “Gas pressure switch signal ” LED
G4 Gas proving system lockout signalling LED
S1 Main switch
S2 Reset pushbutton for control box
S3 (only on fully modulating burners) Operation selector MAN - AUTO (operation in manual or automatic mode):
MIN = operation with minimum output
0 = Stop
MAX = operation at the maximum output

Gas operation

- Turn to the ON position the mains switch S1 on the burner front panel.
- Check the flame control box is not in the lockout position (light B1 on), if necessary reset it by means of the pushbutton S2 (reset);
- Check that the control thermostats or pressure switches enable the burner to operate.
- Check the gas supply pressure is sufficient (light G3 on), if necessary, adjust the pressure switches.

Only burners provided with the gas proving system: the check cycle of the gas proving system starts; the end of this check is signalled by the light of the lamp on the device. When the valves check is finished, the startup cycle of the burner begins. In the case of a leak in a valve, the gas proving system locks and the lamp G4 lights. To reset the device press the device pushbutton.

- The startup cycle begins, the actuator drives the air damper to the maximum opening position, the fan motor starts and the pre-purgue phase begins. During the pre-purgue phase, the complete opening of the air damper is signalled by the lamp B2 on the frontal panel of the electrical board.
- At the end of the pre-purgue phase, the air damper goes to the ignition position, the ignition transformer turns on (signalled by the lamp B4) and few seconds later the solenoid valves EV1 and EV2 are energized (lights G1 and G2 on the front panel).
- Few seconds after the opening of the valves, the ignition transformer turns off and the lamp B4 turns off subsequently:

Double-stage burners: the burner is on in low flame stage (light G is on); some seconds later, the high flame operation begins and the burner switches automatically to high flame (light B2 is on) or remains in low flame operation, accordign to the plant requests.

Progressive and fully modulating burners - few seconds after the gas valve opening, the ignition transformer is de-energized. The burner is in low flame operation and some seconds later, the two-stages operation begins; the burner increases or decreases its output, directly driven by the external thermostat (progressive version) or by the modulator (fully modulating burners only).

ADJUSTING AIR AND GAS FLOW RATES

WARNING! During commissioning operations, do not let the burner operate with insufficient air flow (danger of formation of carbon monoxide); if this should happen, make the fuel decrease slowly until the normal combustion values are achieved.
WARNING! the combustion air excess must be adjusted according to the values in the following chart.

Recommended combustion parameters		
Fuel	Recommended (%) CO_2	Recommended (%) O_2
Natural gas	9 ÷ 10	3 ÷ 4.8
LPG	11 ÷ 12	2.8 ÷ 4.3

Adjustments - brief description

Adjust the air and gas flow rates at the maximum output (“high flame”) first, by means of the air damper and the adjusting cam respectively.

- Check that the combustion parameters are in the suggested limits.
- .Check the flow rate measuring it on the counter or, if it was not possible, verifying the combustion head pressure by means of a differential pressure gauge.
- Then, adjust the combustion values corresponding to the points between maximum and minimum: set the shape of the adjusting cam foil. The adjusting cam sets the air/gas ratio in those points, regulating the opening-closing of the throttle gas valve.
- Set, now, the low flame output, acting on the low flame microswitch of the actuator in order to avoid the low flame output increasing too much or that the flues temperature gets too low to cause condensation in the chimney.

Fuel

DANGER! The burner must be used only with the fuel specified in the burner data plate.

Type	--
Model	--
Year	--
S.Number	--
Output	--
Oil Flow	--
Fuel	--
Category	--
Gas Pressure	--
Viscosity	--
El.Supply	--
El.Consump.	--

Adjusting procedure

1 Turn the burner on by means of its main switch **A**: if the burner locks (LED **B** on in the control panel) press the RESET button (**C**) on the control panel. See chapter “Operation” for further details.

2 check the fan motor rotation;

3 Start the burner up by means of the thermostat series and wait unitl the pre-purge phase comes to end and that burner starts up;

4 the burner starts up in the low flame stage: drive the burner to high flame stage, by means of the “high/low flame” thermostat **TAB**.

5 adjust the burner combustion values in the high flame stage as described in the following steps.

6 go on adjusting air and gas flow rates: check, continuosly, the flue gas analisys, as to avoid combustion with little air; dose the air according to the gas flow rate change following the steps quoted below;

7 acting on the pressure governor of the valves group, adjust the **gas flow rate in the high flame stage** as to meet the values requested by the boiler/utilisation:

- **Multibloc MB-DLE:** the valve is adjusted by means of the **RP** regulator after slackening the locking screw **VB** by a number of turns. By unscrewing the regulator **RP** the valve opens, screwing the valve closes. The pressure stabilizer is adjusted by operating the screw **VS** located under the cover **C**. By screwing down the pressure is increased and by unscrewing it is reduced. **Note:** the screw **VSB** must be removed only in case of replacemente of the coil.

- **Siemens VGD valves group:** remove cap **T** and act on the **VR** adjusting screw to increase or decrease the pressure and consequently the gas rate; screwind **VR** the rate increases, unscrewing it decreases (see next figure).

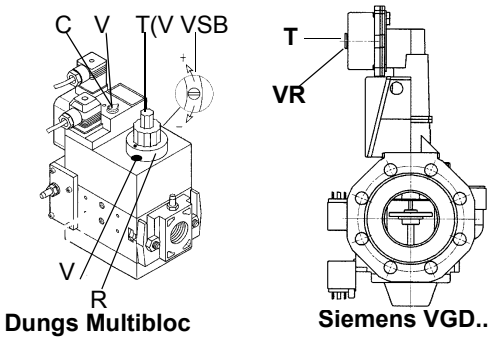

Pressure governor is factory-set. The setting values must be locally adapted to machine conditions. Important! Follow the instructions carefully!

8 .To adjust the **air flow rate in the high flame stage**, loose the **RA** nut and screw **VRA** as to get the desired air flow rate: moving the rod **T** towards the air damper shaft, the air damper opens and consequently the air flow rate increases, moving it far from the shaft the air damper closes and the air flow rate decreases.

Note: once the procedure is perfomed, be sure that the blocking nut **RA** is fasten.

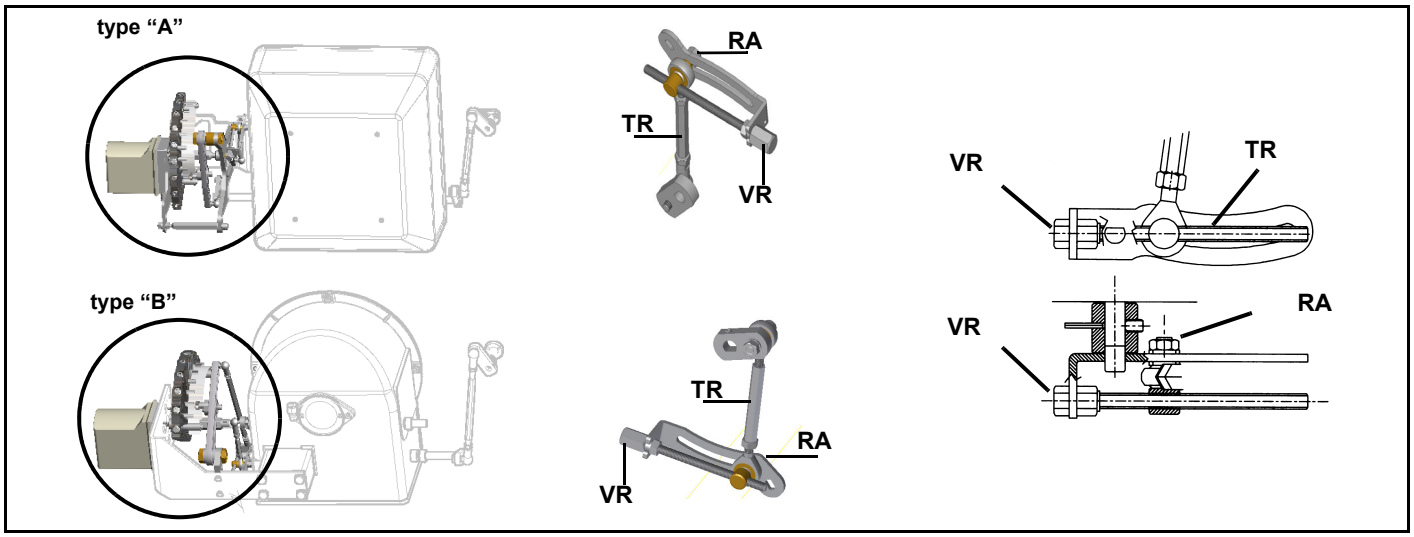

Go on adjusting the burner according to the model (double-stage, progressive, fully-modulating).

Double-stage burners

- drive the burner to the low flame stage by means of the **TAB** thermostat;
- To change the gas flow rate in order to get an efficient combustion, slacken the nut **DB** and adjust the opening angle of the gas butterfly valve by rotating the screw **TG** (clockwise rotation increases gas flow, anticlockwise rotation decreases it). The slot on the butterfly valve shaft shows the opening degree of the valve regardingthe horizontal axis. **Don't act on DE nuts.**

NOTE: At the end of settings, make sure the locking screws **RA** and **DB** are fully tightened.

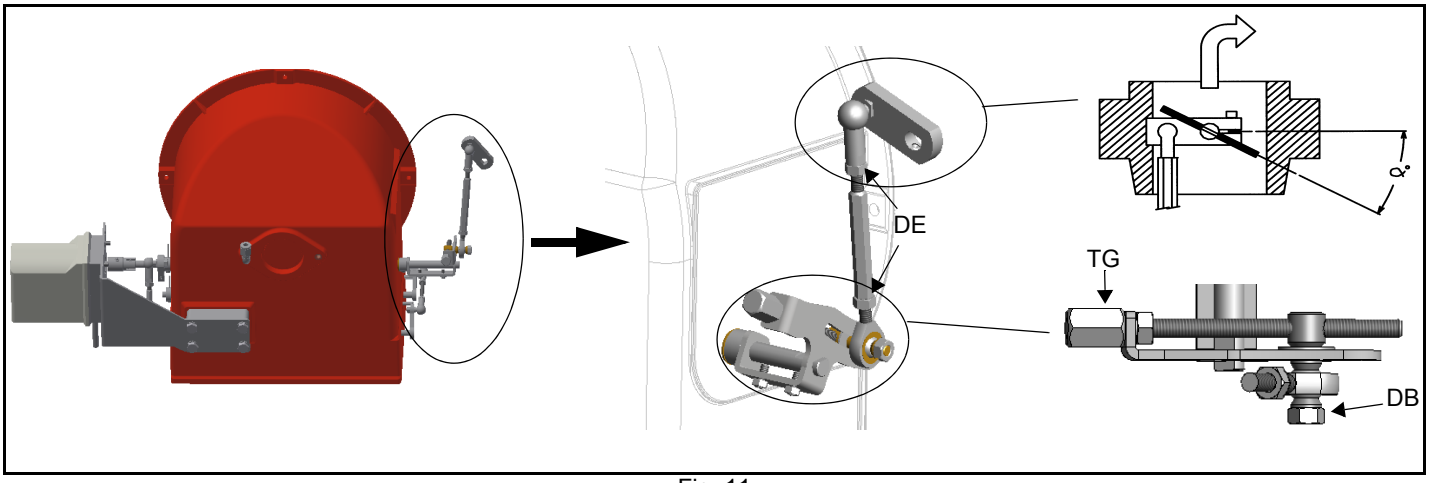

Fig. 11

- Now adjust the pressure switches.

- If it is necessary to change the burner output in the low flame stage, move the low flame cam: the low flame position matches the ignition position. As far as burners fitted with Dungs MBC gas valves, the low flame cam does not match the ignition cam position, that is why it must be set at about 30° more than the ignition cam.
- Turn the burner off and then start it up again. If the adjustment is not correct, repeat the previous steps.

Berger STA6 B 3.41 (high-low flame burners)

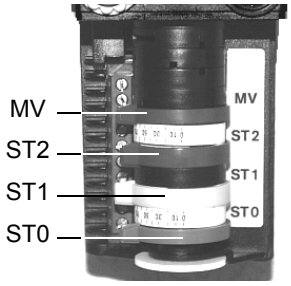

Siemens SQN72.2A4Axx (high-low flame burners)

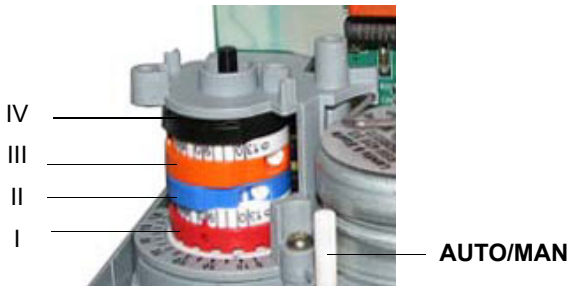

For DUNGS MB-DLE / Siemens VGD gas valves	Actuator camsBerger STA	Siemens SQN72
High flame position (set to 90°)	ST2	I (red)
Low flame and ignition position	ST1	III (orange)
Stand-by position (set to 0°)	ST0	II (blue)
Not used	MV	IV (black)

Berger STA12: a key is provided to move the cams.

Siemens SQN72: a key is provided to move cams I and IV, the other cams can be moved by means of screws.

On the BERGER STA12B3.41 actuator, the manual air damper control is not provided. On the Siemens actuator the AUTO/MAN mode is provided (see picture).

Progressive burners

Once the procedure till step 8 described is accomplished, go on as follows:

9 set the low flame cam matching the high flame cam;

10 set the **TAB** thermostat to the minimum in order that the actuator moves progressively towards the low flame position;

The manual air damper control is not provided on these actuators. The adjustments must be carried out acting manually on the cams.

Berger STA12B3.41 (progressive and fully modulating burners)

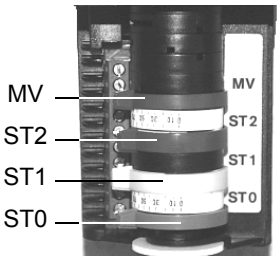

Siemens SQN72.4A4Axx (progressive and fully modulating burners)

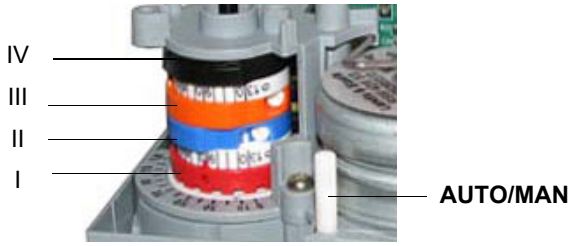

For DUNGS MB-DLE / Siemens VGD gas valves	Actuator camsBerger STA	Siemens SQN72
High flame position (set to 90°)	ST2	I (red)
Low flame and ignition position	ST1	III (orange)
Stand-by position (set to 0°)	ST0	II (blue)
Not used	MV	IV (black)

11 move the low flame cam to the minimum to move the actuator towards the low flame until the two bearings find the adjusting screw that refers to the lower position: screw **V** to increase the rate, unscrew to decrease.

12 Move again the low flame cam towards the minimum to meet the next screw on the adjusting cam and repeat the previous step; go on this way as to reach the desired low flame point.

13 Now adjust the pressure switches.

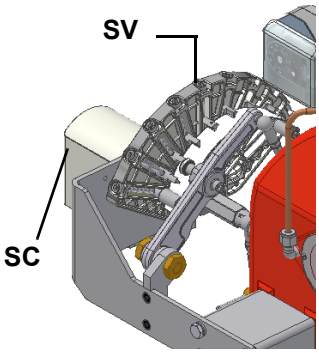

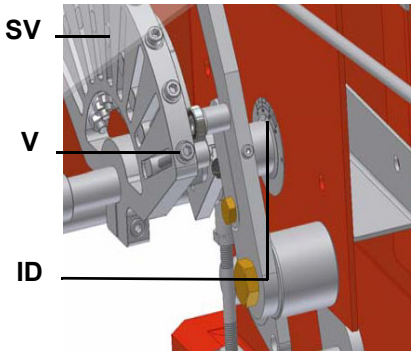

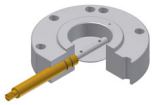

Gas butterfly valve closed

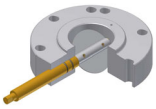

Gas butterfly valve open

14 If it is necessary to change the burner output in the low flame stage, move the low flame cam: the low flame position matches the ignition position. As far as burners fitted with Dungs MBC gas valves, the low flame cam does not match the ignition cam position, that is why it must be set at about 30° more than the ignition cam.

15 Turn the burner off and then start it up again. If the adjustment is not correct, repeat the previous steps.

Fully modulating burners

To adjust the fully-modulating burners, use the **S3** switch on the burner control panel (see next picture), instead of the **TAB** thermostat as described on the previous paragraphs about the progressive burners. Go on adjusting the burner as described before, paying attention to use the CMF switch intead of **TAB**.

The **S3** position sets the oprating stages: to drive the burner to the high-flame stage, set S3=MAX; to drive it to the low-flame stage, set S3=MIN.

To move the adjusting cam set S3=MIN or MAX and then S3=MAN.

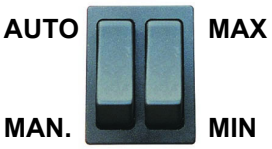

S3

MAN stop at the current position
MAX high flame operation
MIN low flame operation
AUTO automatic operation

MultiBloc MBE *Regulation VD-R whith PS*

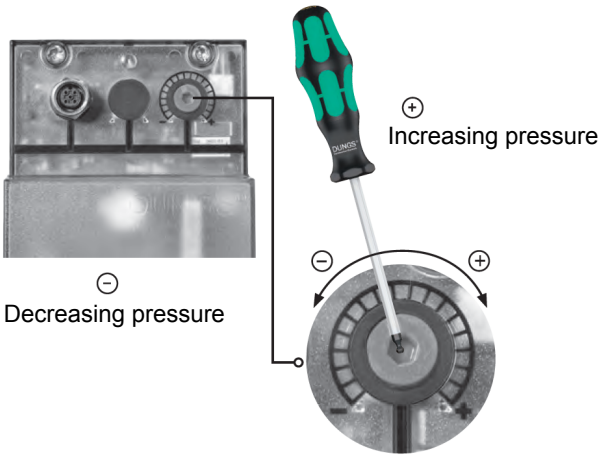

Fig. 12

Setting scale is „Not“ linear! Various sensors available. Output pressure according to sensor‘s measuring range.

Adjust the outlet pressure to the value specified by the burner or equipment manufacturer!

While making outlet pressure adjustments, do not exceed a value that creates a hazardous condition to the burner!

ATTENTION: To set the outlet pressure of the VD-R regulator, act on the adjustment ring nut (Fig. 10)

The position of the indicator in the dial indicates the value of the outlet pressure calculated as a percentage of the full scale of the PS sensor (Fig. 11)

Outlet pressure	MIN	10%	25%	50%	75%	MAX
PS-10/40	4 mbar 0,4 kPa 2 "w.c.	10 mbar 1,0 kPa 4 "w.c.	25 mbar 2,5 kPa 10 "w.c.	50 mbar 5,0 kPa 20 "w.c.	75 mbar 7,5 kPa 30 "w.c.	100 mbar 10,0 kPa 40 "w.c.
PS-50/200	20 mbar 2,0 kPa 8 "w.c.	50 mbar 5,0 kPa 20 "w.c.	125 mbar 12,5 kPa 50 "w.c.	250 mbar 25,0 kPa 100 "w.c.	375 mbar 37,5 kPa 150 "w.c.	500 mbar 50,0 kPa 200 "w.c.

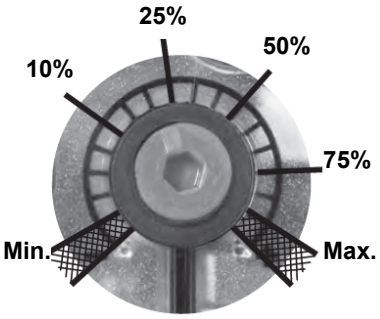

Fig. 13

Adjusting output pressure for positive pressure systems (requires PS-10/40 or PS-50/200):

Pressure taps MultiBloc MBE

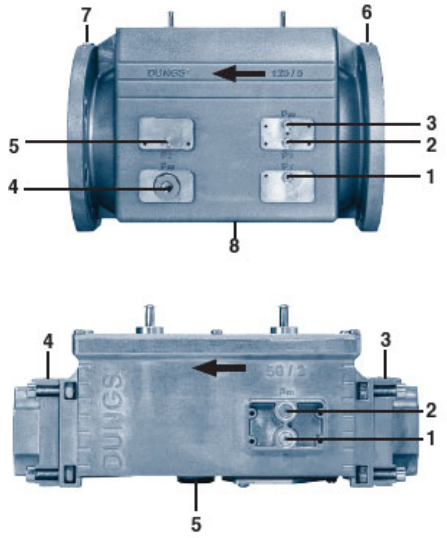

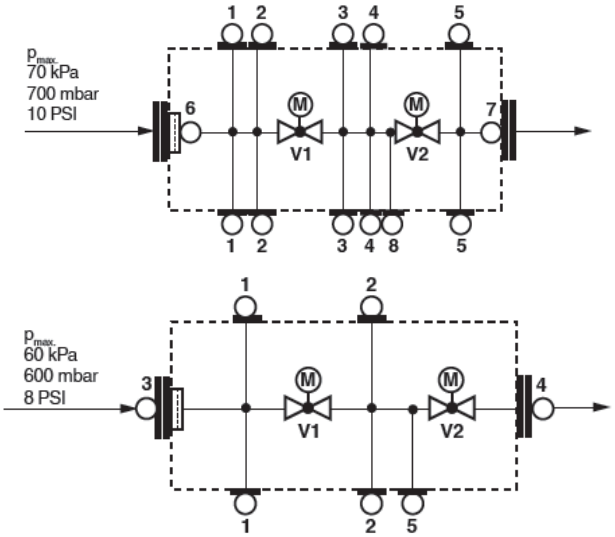

1, 2, 3, 5
Sealing plug

G ⅛ ISO 228

4
For system accessories

G ¾

Fig. 14

Adjusting the gas valves group

Multibloc MB-DLE

The multibloc unit is a compact unit consisting of two valves, gas pressure switch, pressure stabilizer and gas filter.

The valve is adjusted by means of the **RP** regulator after slackening the locking screw **VB** by a number of turns. By unscrewing the regulator **RP** the valve opens, screwing the valve closes. To set the fast opening remove cover **T**, reverse it upside down and use it as a tool to rotate screw **VR**. Clockwise rotation reduces start flow rate, anticlockwise rotation increases it.

Do not use a screwdriver on the screw **VR**!

The pressure stabilizer is adjusted by operating the screw **VS** located under the cover **C**. By screwing down the pressure is increased and by unscrewing it is reduced.

Note: the screw **VSB** must be removed only in case of replacemente of the coil.

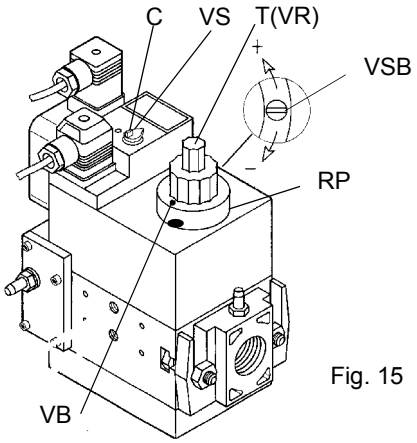

Fig. 15

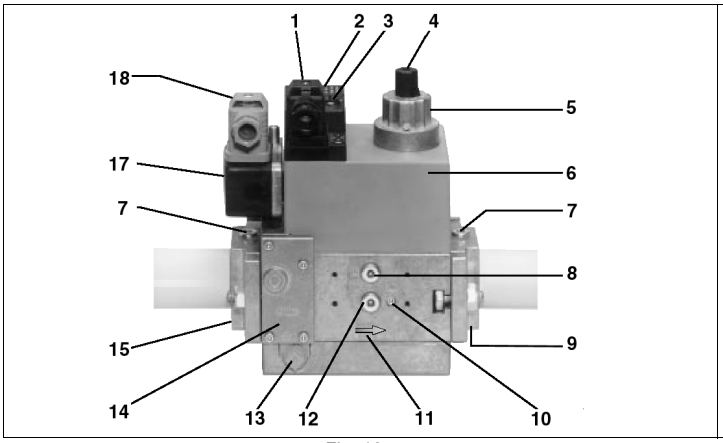

Fig. 16

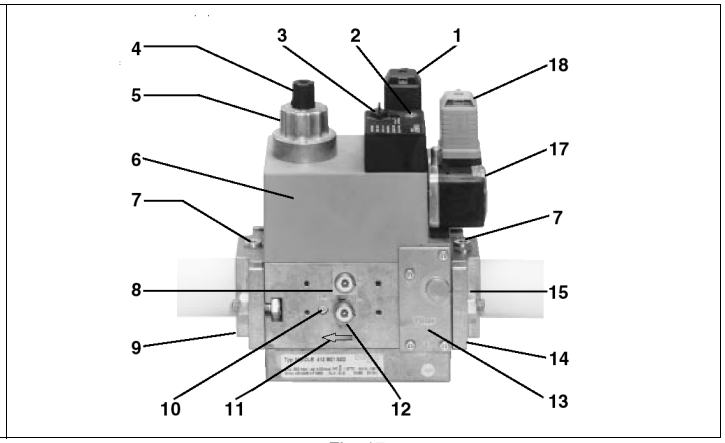

Fig. 17

Key

1 Electrical connection for valves
2 Operation display (optional)
3 Pressure governor closing tap
4 Start setting cap
5 Hydraulic brake and rate regulator
6 Coil
7 Test point connection G 1/8
8 Test point connection G 1/8 downstream of valve 1, on both sides
9 Output flange
10 Test point connection M4 downstream of valve 2
11 Gas flow direction
12 Test connection G 1/8 downstream of valve 1, on both sides
13 Vent nozzle pressure regulator
14 Filter (below cover)
15 Input flange
17 Pressure switch
18 Pressure switch electric connection

Gas valveversion with SKP2 (built-in pressure stabilizer)

To increase or decrease gas pressure, and therefore gas flow rate, remove the cap **T** and use a screwdriver to adjust the regulating screw **VR**. Turn clockwise to increase the flow rate, counterclockwise to reduce it.

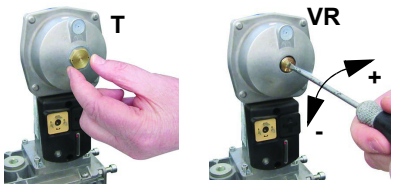

Adjusting the combustion head

The burner is factory-adjusted with the combustion head in the "MAX" position, accordingly to the maximum power. To operate the burner at a lower power, progressively shift back the combustion head, towards the "MIN" position, screwing the screw **VRT**. The ID index shows how much the combustion head moved.

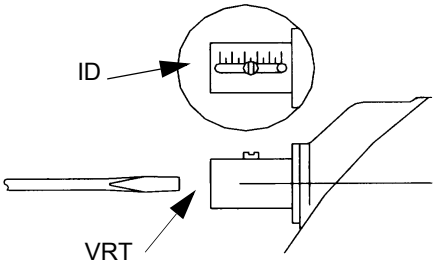

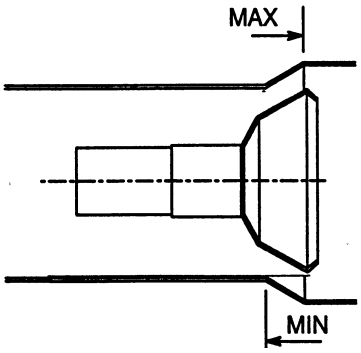

Attention! if it is necessary to change the head position, repeat the air and fuel adjustments described above.

Center head holes gas flow regulation (for LPG operation)

To adjust the gas flow, partially close the holes, as follows:

1 loosen the three **V** screws that fix the adjusting plate **D**;

2 insert a screwdriver on the adjusting plate notches and let it move CW/CCW as to open/close the holes;

3 once the adjustmet is performed, fasten the **V** screws.

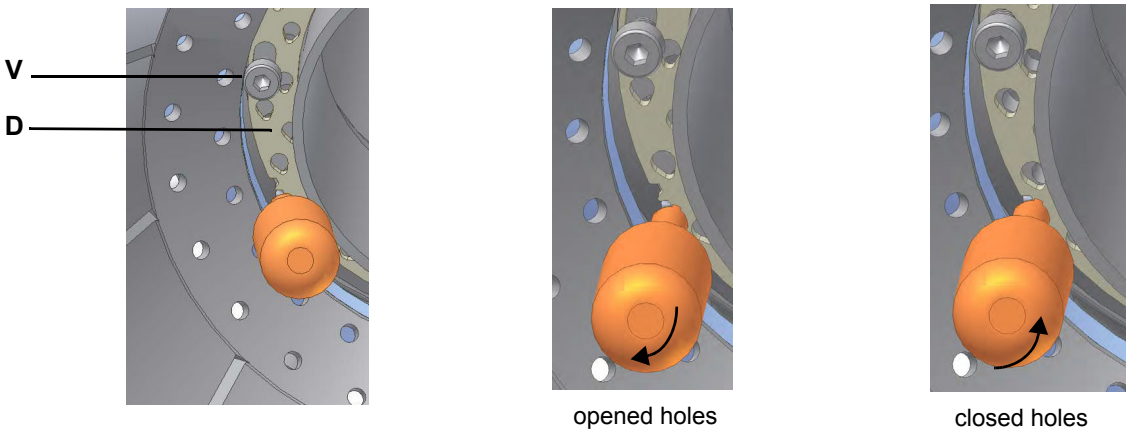

The adjusting plate correct position must be regulated in the plant during the commissioning.

As far as the plate adjustments, insert a 1,5mm (P61, P65), 1.4mm (P71), 1.7mm (P73A) sized rod iron and close as shown on the next pictures.

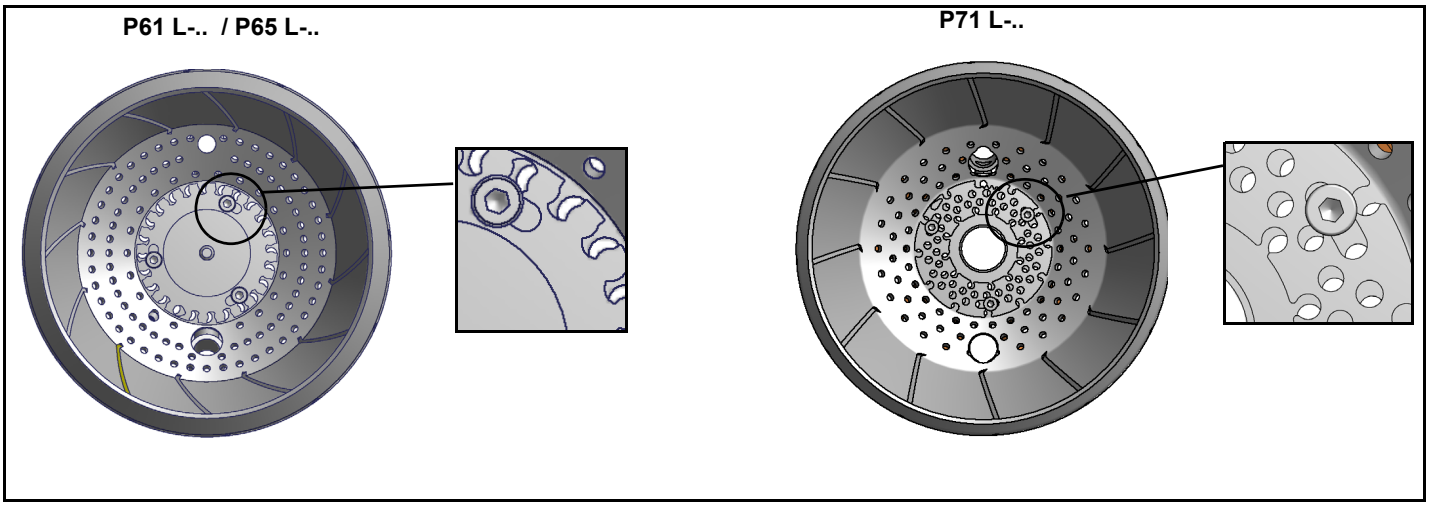

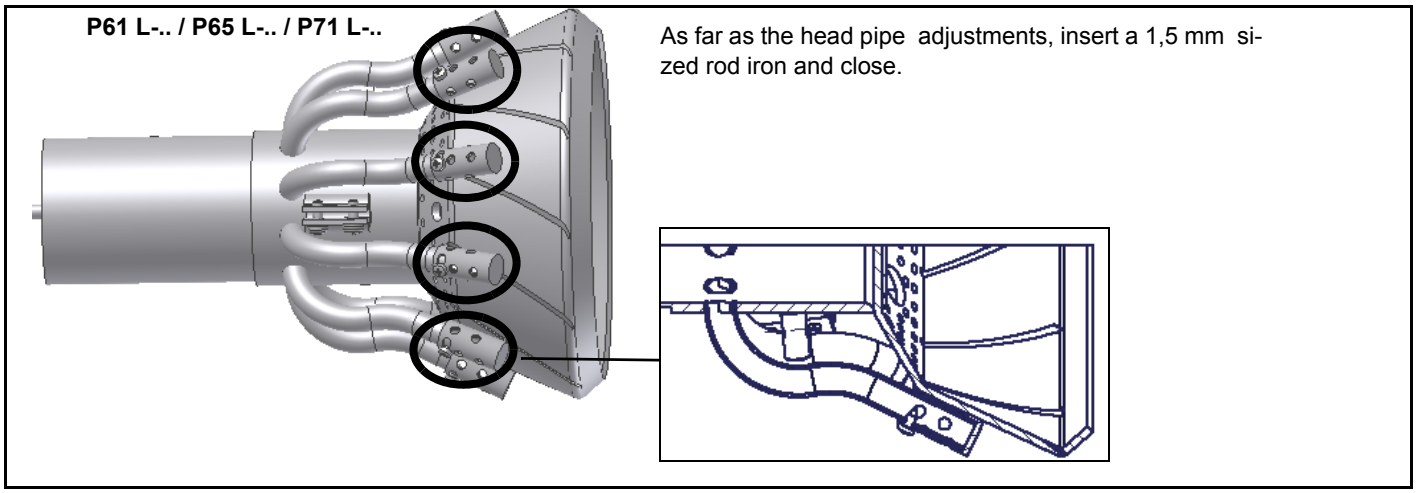

Calibration air and gas pressure switches

The **air pressure switch** locks the control box if the air pressure is not the one requested. If it happens, unlock the burner by means of the control box unlock pushbutton, placed on the burner control panel.

The **gas pressure switches** check the pressure to avoid the burner operate when the pressure value is not in the requested pressure range.

Calibration the maximum gas pressure switch (when provided)

To calibrate the maximum pressure switch, proceed as follows according to its mounting position:

- remove the pressure switch plastic cover;
- if the maximum pressure switch is mounted upstreaam the gas valves: measure the gas pressure in the network, when flame is off; by means of the adjusting ring nut **VR**, set the value read, increased by the 30%.
- if the maximum pressure switch is mounted downstream the “gas governor-gas valves” group and upstream the butterfly valve: light the burner, adjust it according to the procedure in the previous paragrph. Then, measure the gas pressure at the operating flow rate, downstream the “gas governor-gas valves” group and upstream the butterfly valve; by means of the adjusting ring nut **VR**, set the value read on step 2, increased by the 30%;
- replace the plastic cover.

Calibration of air pressure switch

To calibrate the air pressure switch, proceed as follows:

- Remove the transparent plastic cap.
- Once air and fuel setting have been accomplished, startup the burner.
- During the pre-purge phase o the operation, turn slowly the adjusting ring nut **VR** in the clockwise direction (to increase the adjusting pressure) until the burner lockout, then read the value on the pressure switch scale and set it to a value reduced by 15%.
- Repeat the ignition cycle of the burner and check it runs properly.
- Refit the transparent plastic cover on the pressure switch.

Calibration of low gas pressure switch

As for the gas pressure switch calibration, proceed as follows:

- Be sure that the filter is clean.
- Remove the transparent plastic cap.
- While the burner is operating at the maximum output, test the gas pressure on the pressure port of the minimum gas pressure switch.
- Slowly close the manual cutoff valve (placed upstream the pressure switch, see gas train installation diagram), until the detected pressure is reduced by 50%. Pay attention that the CO value in the flue gas does not increase: if the CO values are higher than the limits laid down by law, slowly open the cutoff valve as to get values lower than these limits.
- Check that the burner is operating correctly.
- Clockwise turn the pressure switch adjusting ring nut (as to increase the pressure value) until the burner stops.
- Slowly fully open the manual cutoff valve.
- Refit the transparent plastic cover on the pressure switch.

Calibration the maximum gas pressure switch (when provided)

To calibrate the maximum pressure switch, proceed as follows according to its mounting position:

- remove the pressure switch plastic cover;
- if the maximum pressure switch is mounted upstreaam the gas valves: measure the gas pressure in the network, when flame is off; by means of the adjusting ring nut **VR**, set the value read, increased by the 30%.
- if the maximum pressure switch is mounted downstream the “gas governor-gas valves” group and upstream the butterfly valve: light the burner, adjust it according to the procedure in the previous paragrph. Then, measure the gas pressure at the operating flow rate, downstream the “gas governor-gas valves” group and upstream the butterfly valve; by means of the adjusting ring nut **VR**, set the value read on step 2, increased by the 30%;
- replace the plastic cover.

PART IV: MAINTENANCE

At least once a year carry out the maintenance operations listed below. In the case of seasonal servicing, it is recommended to carry out the maintenance at the end of each heating season; in the case of continuous operation the maintenance is carried out every 6 months.

WARNING: ALL OPERATIONS ON THE BURNER MUST BE CARRIED OUT WITH THE MAINS DISCONNECTED AND THE FUEL MANAUL CUTOFF VALVES CLOSED!
ATTENTION: READ CAREFULLY THE "WARNINGS" CHAPTER AT THE BEGINNIG OF THIS MANUAL.

ROUTINE MAINTENANCE

- Check that the gas meter is not moving when the burner is off. In case it is rotating, look for possible leaks.
- Check the cleaning condition of the vent. Clean the vent by using exclusively a dry brush. If needed, disassemble it from the motor's shaft and wash it by using non corrosive detergents. Prior to disassemble the vent, take the measurements in relation to the motor's shaft, so as to reassemble it in the same position.
- Check that all parts in contact with combustive air (air box, protection mesh and Archimedean screw) are clean and free from any obstruction that might impede free afflux. Clean it with compressed air if available and/or a dry brush or cloths. Eventually wash it with non corrosive detergents.
- Check the blast tube; it must be substituted in case of obvious cracks or anomalous holes. Slight deformations that do not affect combustion may be tolerated
- Check the condition of the burner-boiler gasket. Eventually substitute it.
- Check the fan's motor: no specific maintenance is needed. In case of anomalous noises when running, check the condition of the bearings and eventually substitute them or completely substitute the motor.
- Clean and examine the gas filter cartridge and replace it if necesssary;
- Remove and clean the combustion head;
- Examine and clean the ignition electrodes, adjust and replace them if necessary;
- Examine and clean the detection electrode/photoelement (according to the burner models), replace it if necessary, in case of doubt, check the detection circuit, after the burner start-up;
- Clean and grease leverages and rotating parts.
- At least every 2 months, or more often if needed, clean the room where the burner is installed.
- Avoid leaving installations, papers, nylon bags, etc., inside the room. They could be sucked by the burner and cause malfunctioning.
- Check that the room's vents are free from obstructions.

ATTENTIONwhen servicing, if it was necessary to disassemble the gas train parts, remember to execute the gas proving test, once the gas train is reassembled, according to the procedure imposed by the law in force.

Gas filter maintenance

To clean or remove the filter, proceed as follows:

1. remove the cap unscrewing the fixing screws (A);
2. remove the filtering cartridge (B), clean it using water and soap, blow it with compressed air(or replace it, if necessary)
3. replace the cartridge in its proper position taking care to place it inbetween the guides as not to hamper the cap replacement;
4. be sure to replace the "O" ring into its place (C) and replace the cover fastening by the proper screws (A).

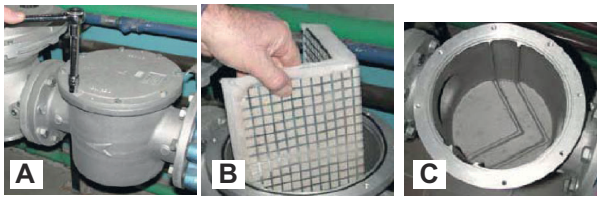

WARNING: Before opening the filter, close the manual cutoff valve downstream the filter and bleed the gas; check that inside the filter there is no pressurised gas.

MultiBloc MBE*MultiBloc VD Mounting*

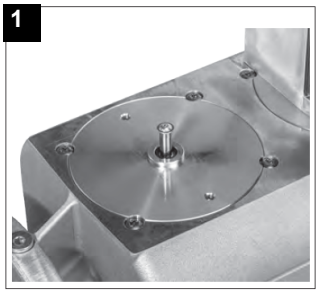

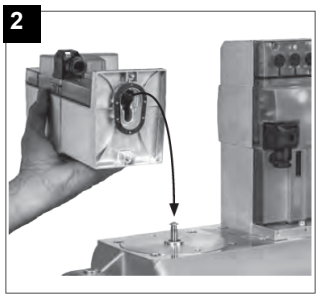

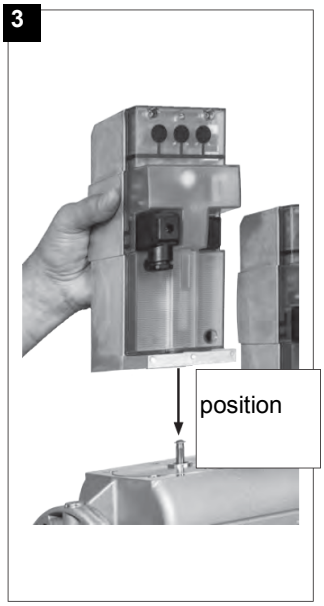

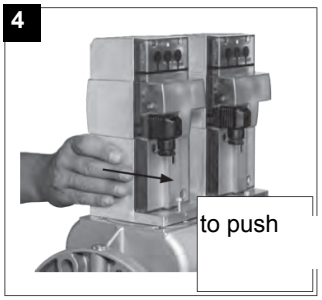

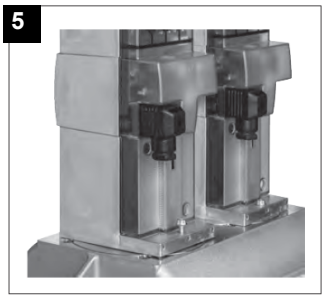

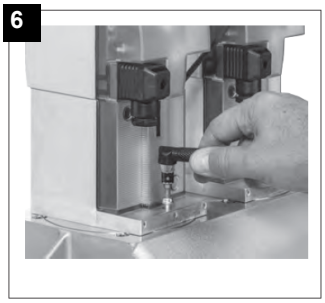

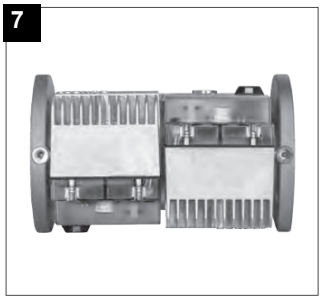

1. Position VD on VB, fig. 2+3.
2. Slide VD forward up to the stop, fig. 4.
3. Screw VD on with 2 M5 screws for each, max. 5 Nm/44 in.-lb., fig. 5/6.
4. VD can be mounted rotated by 180°, fig. 7.

Removing the combustion head

Type P61

- Remove cover C.
- Unscrew the two screws S holding in position the washer and then unscrew VRT to free the threaded rod AR.
- Unscrew the screws V holding in position the manifold G and pull out the complete group as shown in figure.

Note: for the subsequent assembly carry out the above described operations in the reverse order, checking the correct position of the OR ring.

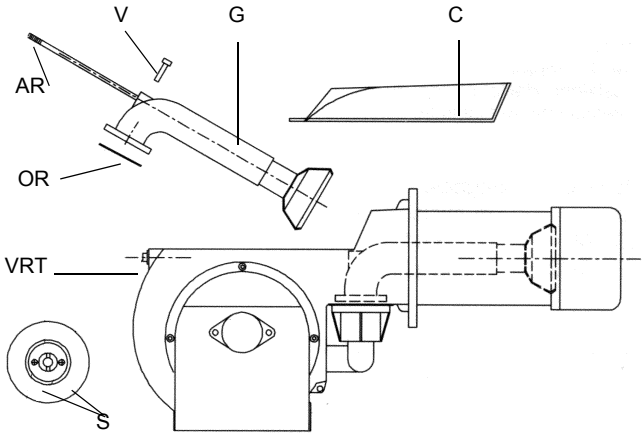

Fig. 18

Type P65 / P71

- Remove the burner cover C.
- Unscrew the screws V holding in position the manifold G and pull out the complete group as shown in the picture.

Note: for the subsequent assembly carry out the above described operations in the reverse order, checking the correct position of the OR ring.

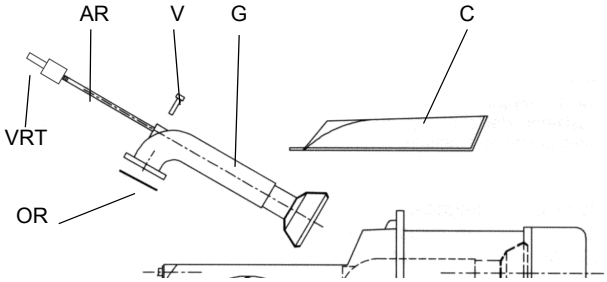

Fig. 19

Adjusting the electrodes

Important Note: Check the ignition and detection electrodes after removing/adjusting the combustion head.

ATTENTION: avoid the ignition and detection electrodes to contact metallic parts (blast tube, head, etc.), otherwise the boiler's operation would be compromised. Check the electrodes position after any intervention on the combustion head.

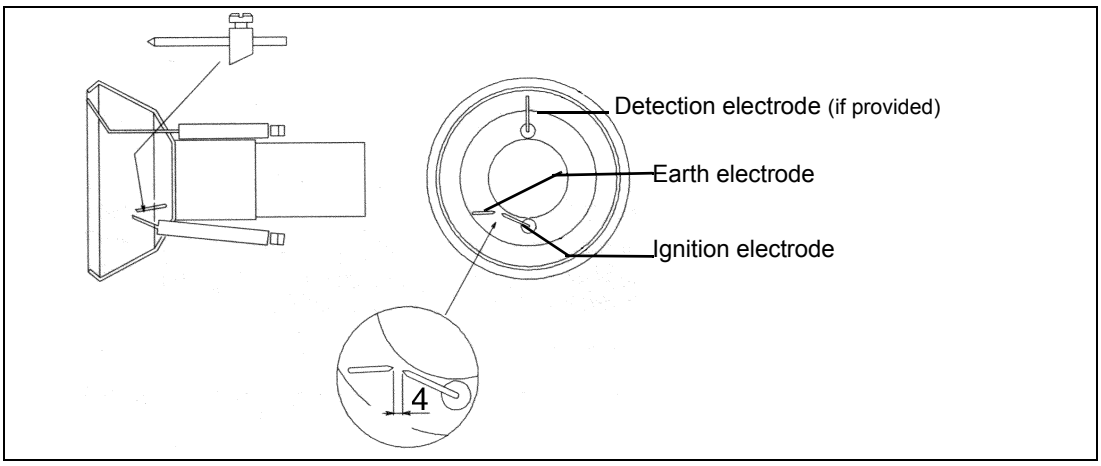

Replacing the electrodes

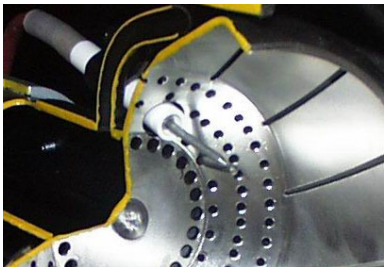

ATTENTION: avoid the ignition and detection electrodes to contact metallic parts (blast tube, head, etc.), otherwise the boiler's operation would be compromised. Check the electrodes position after any intervention on the combustion head.

To replace the electrodes:

- Remove the cover
- Disconnect the electrode cables
- Loose the screws
- Remove and replace the electrodes, observing the electrodes position (see previous paragraph).

Replacing the detection electrode (if provided)

ATTENTION: avoid the ignition electrodes to contact metallic parts (blast tube, head, etc.), otherwise the boiler's operation would be compromised. Check the electrodes position after any intervention on the combustion head.

To replace the ignition electrodes, proceed as follows:

1 remove the burner cover
2 disconnect the electrodes cables (**CR**);
3 loose the screw of the electrodes support (**VR**);
4 remove the electrodes and replace them paying attention to the measures shown in figure.

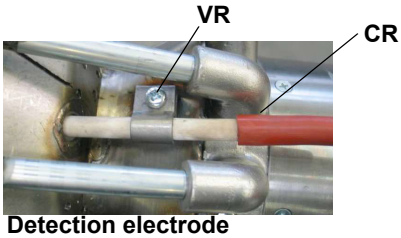

Detection electrode

Checking the detection current

To check the detection signal follow the scheme in the picture below. If the signal is less than the value indicated, check the position of the detection electrode or detector, the electrical contacts and, if necessary, replace the electrode or the detector.

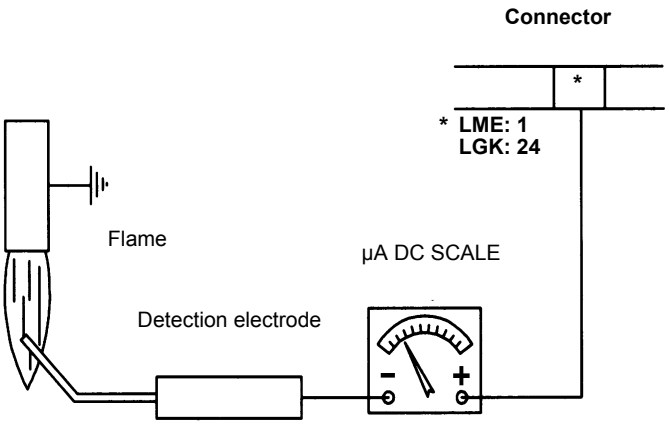

Control box	Minimum detection signal
Siemens LME21-22	3 µA
LGK	12 µA

Device	Flame detector	Minimum detection signal
Siemens LMV2x/3x	QRA	70 µA (intensity of flame >24%)

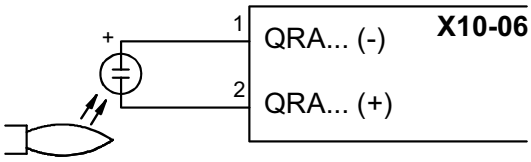

(QRA - only for P71 GPL)*Checking the detection current with photocell (LME) (L.P.G.)*

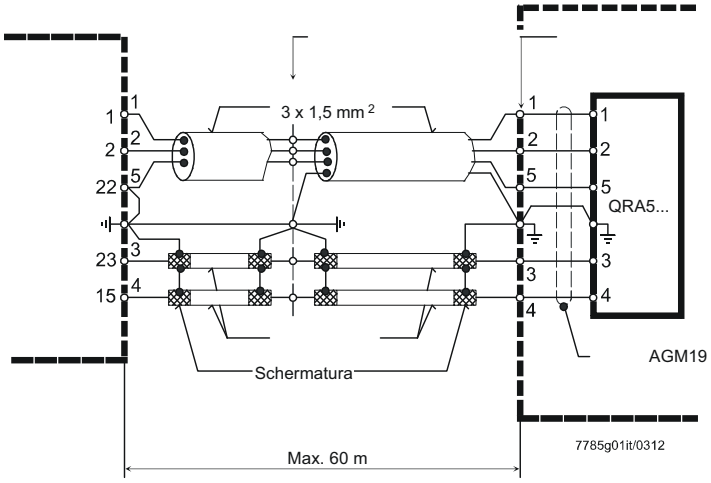

Legenda A Amperometro
RAR9... Rivelatore con fotocellula al silicio
ION Sonda di ionizzazione

Burner service term

- In optimal operating conditions, and with preventive maintenance, the burner can last up to 20 years.
- Upon expiry of the burner service term, it is necessary to carry out a technical diagnosis and, if necessary, an overall repair.
- The burner status is considered to be at its limit if it is technically impossible to continue using it due to non-compliance with safety requirements or a decrease in performance.
- The owner makes the decision whether to finish using the burner, or replacing and disposing of it based on the actual state of the appliance and any repair costs.
- The use of the burner for other purposes after the expiry of the terms of use is strictly prohibited.

Seasonal stop

To stop the burner in the seasonal stop, proceed as follows:

1 turn the burner main switch to 0 (Off position)
2 disconnect the power mains
3 close the fuel valve of the supply line

Burner disposal

In case of disposal, follow the instructions according to the laws in force in your country about the “Disposal of materials”.

WIRING DIAGRAMS

Refer to the attached wiring diagrams.

WARNING

1 - Electrical supply 230V / 400V 50Hz 3N a.c.
2 - Do not reverse phase with neutral
3 - Ensure burner is properly earthed

TROUBLESHOOTNG GUIDE Gas operation

BURNER DOESN'T LIGHT	* No electric power supply	* Restore power supply
	* Main switch open	* Close switch
	* Thermostats open	* Check set points and thermostat connections
	* Bad thermostat set point or broken thermostat	* Reset or replace the thermostat
	* No gas pressure	* Restore gas pressure
	* Safety devices (manually operated safety thermostat, pressure switches and so on) open	* Restore safety devices; wait till boiler reaches operating temperature then check safety device functionality.
	* Broken fuses	* Replace fuses. Check current absorption
	* Fan thermal contacts open (three phases motors only)	* Reset contacts and check current absorption
	* Burner control lock out	* Reset and check its functionality
	* Burner control damaged	* Replace burner control
GAS LEAKAGE: BURNER LOCKS OUT (NO FLAME)	* Gas flow is too low	* Increase the gas flow * Check gas filter cleanness * Check butterfly valve opening when burner is starting (only Hi-Low flame and progressive)
	* Ignition electrodes discharge to ground because dirty or broken	* Clean or replace electrodes
	* Bad electrodes setting	* Check electrodes position referring to instruction manual
	* Electrical ignition cables damaged	* Replace cables
	* Bad position of cables in the ignition transformer or into the electrodes	* Improve the installation
	* Ignition transformer damaged	* Replace the transformer
BURNER LOCKS OUT WITH FLAME PRESENCE	* Bad flame detector set	
	* Flame detector damaged	* Replace or adjust flame detector
	* Bad cables of flame detector	* Check cables
	* Burner control damaged	* Replace burner control
	* Phase and neutral inverted	* Adjust connections
	* Ground missing or damaged	* Check ground continuity
	* Voltage on neutral	* Take off tension on neutral
	* Too small flame (due to not much gas)	* Adjust gas flow * Check gas filter cleanness
	* Too much combustion air	* Adjust air flow rate
only FOR LME22: BURNER CONTINUES TO PERFORM ALL ITS FEATURES WITHOUT IGNITING THE BURNER	* Air pressure switch damaged or bad links	* Check air pressure switch functions and links
	* Burner control damaged	* Replace burner control
BURNER LOCKS OUT WITHOUT ANY GAS FLOW	* Gas valves don't open	* Check voltage on valves; if necessary replace valve or the burner control * Check if the gas pressure is so high that the valve cannot open
	* Gas valves completely closed	* Open valves
	* Pressure governor too closed	* Adjust the pressure governor
	* Butterfly valve closed	* Open the butterfly valve
	* Maximum pressure switch open.	* Check connection and functionality
	* Air pressure switch doesn't close the NO contact	* Check connections * Check pressure switch functionality
THE BURNER IS BLOCKED AND THE EQUIPMENT PROVIDES A LOCK CODE "CAUSE AIR PRESSURE SWITCH FAULT"	* Air pressure switch damaged (it keeps the stand-by position or badly set)	* Check air pressure switch functionality * Reset air pressure switch
	* Air pressure switch connections wrong	* Check connections
	* Air fan damaged	* Replace motor
	* No power supply	* Reset power supply
	* Air damper too closed	* Adjust air damper position
BURNER LOCKS OUT DURING NORMAL RUNNING	* Flame detector circuit interrupted	* Check wiring * Check photocell
	* Burner control damaged	* Replace burner control
	* Maximum gas pressure switch damaged or badly set	* Reset pressure switch or replace it
THE BURNER STARTS AND AFTER A WHILE IT REPEATS THE STARTING CYCLE.	* Gas pressure switch badly set	* Reset the pressure switch
	* Gas filter dirty	* Clean gas filter
	* Gas governor too low or damaged	* Reset or replace the governor
BURNER STANDS WHILE RUNNING WITHOUT ANY SWITCHING OF THERMOSTATS	* Thermal contacts of fan motor open	* Reset contacts and check values * Check current absorption
FAN MOTOR DOESN'T START	* Internal motor wiring broken	* Replace wiring or complete motor
	* Fan motor starter broken	* Replace starter
	* Fuses broken (three phases only)	* Replace fuses and check current absorption
BURNER DOESN'T SWITCH TO HIGH FLAME	* Hi-low flame thermostat badly set or damaged	* Reset or replace thermostat
	* Servomotor cam badly set	* Reset servomotor cam
***mechanical only*: SOMETIMES THE SERVOMOTOR RUNS IN THE WRONG WAY**	* Servomotor capacitor damaged	* Replace capacitor

BURNER EXPLODED VIEW

P61 - P65 - P71

Pos.	Description
1.1	FAN
1.2	MOTOR
2.1	VALVE GROUP
2.2	THREADED PIPE
2.3	ELBOW
2.4	M/F REDUCTION
2.5	VALVE GROUP FLANGE
2.6	GAS PROVING SYSTEM
3	AIR INLET
4	HOUSING
4.1	COVER
5	GASKET
6	AIR PRESSURE SWITCH PIPE
7	PLEXYGLASS
8	BLAST TUBE
9	AIR PRESSURE SWITCH
10.1	OR RING
10.2	BUTTERFLY VALVE
10.3	GAS MANIFOLDC
11.1.1	COMPLETE MOUNTED LEVERAGE
11.1.2	ADJUSTING CAM
11.1.3	ACTUATOR
11.1.4	ACTUATOR CONNECTOR
11.1.5	BRACKET
11.2.1	AIR ADJUSTING CAM REGULATING NUT
11.2.2	AIR ADJUSTING CAM SCREW
11.2.3	AIR ADJUSTING CAM REGULATING SCREW

Pos.	Description
11.2.4	TRANSMISSION AIR ADJUSTING CAM
11.2.5	CONNECTING ROD
11.2.6	ROD
11.2.7	JOINT
11.2.8	ROD JOINT
11.3	INDEX PLATE
11.4	INNER AIR DAMPER
11.5	INDEX BUSH
11.6	BUSH
11.7	BOX
11.8	DAMPER PIVOT
11.9	BUTTERFLY TRANSMISSION PIVOT
11.10	ACTUATOR PIVOT
11.11	CONNECTING ROD
11.12	ROD
11.13	ROD
11.14	JOINT
11.15	ROD JOINT
12	PREMOUNTED HEAD ADJUSTING SCREWS
13.1	FRONT PANEL
13.2	CONTROL PANEL
13.3	CONTROL PANEL COVER
14.1	DETECTION ELECTRODE
14.2	IGNITION ELECTRODE
14.3	GROUNDED ELECTRODE
14.4	COMBUSTION HEAD
15	BLACK/GREEN CONNECTOR

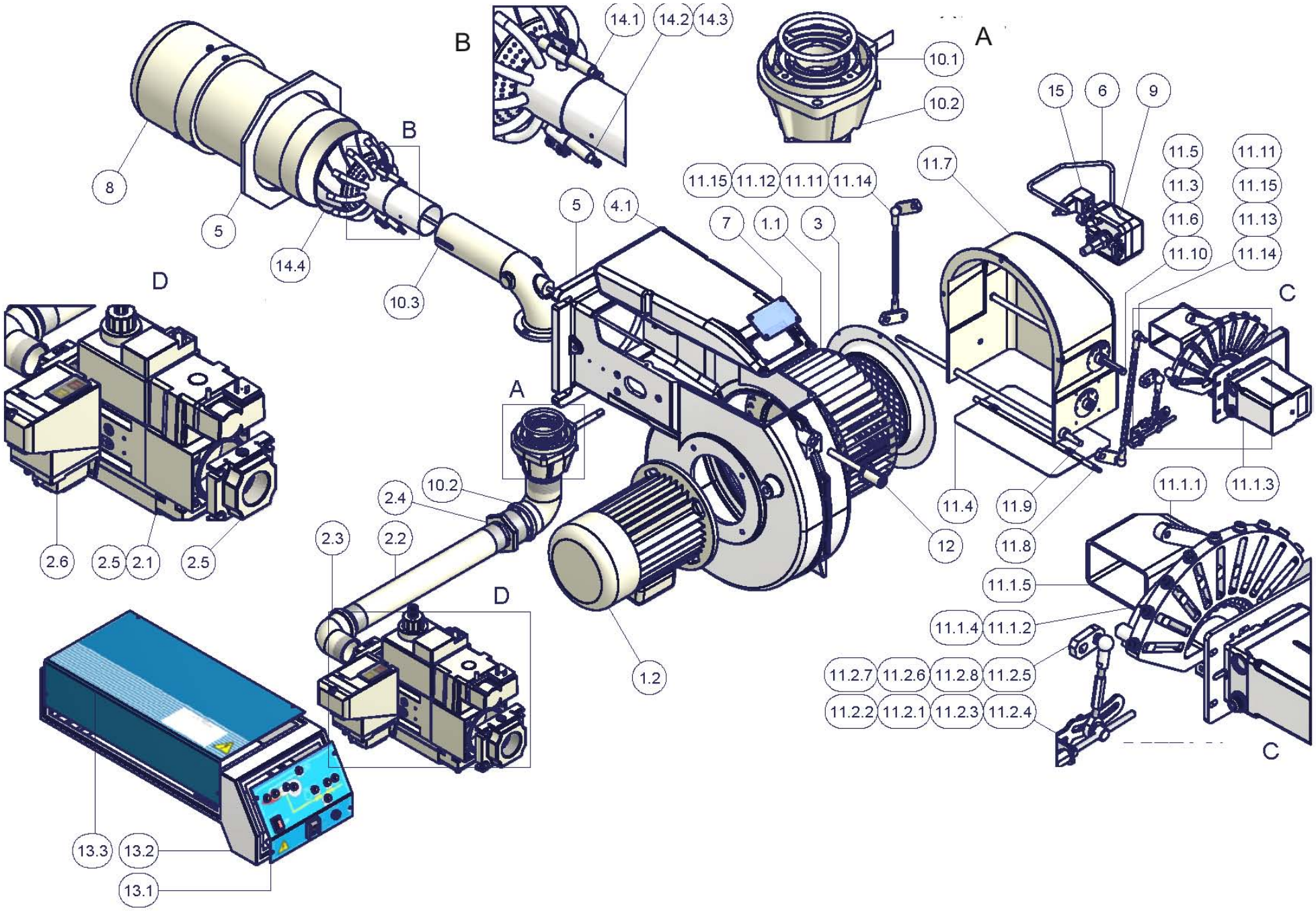
A
B
C
D
8
5
14.4
10.3
14.1
14.2
14.3
10.1
10.2
15
6
9
11.5
11.3
11.6
11.10
11.11
11.15
11.13
11.14
11.7
11.15
11.12
11.11
11.14
7
1.1
3
5
4.1
2.4
10.2
2.3
2.2
2.6
2.5
2.1
2.5
1.2
12
11.4
11.9
11.8
11.1.1
11.1.3
11.1.5
11.1.4
11.1.2
11.2.7
11.2.6
11.2.8
11.2.5
11.2.2
11.2.1
11.2.3
11.2.4
13.3
13.2
13.1

VERSIONE ALTA-BASSA FIAMMA "AB" / PROGRESSIVO "PR"
"AB" HIGH-LOW / "PR" PROGRESSIVE VERSION

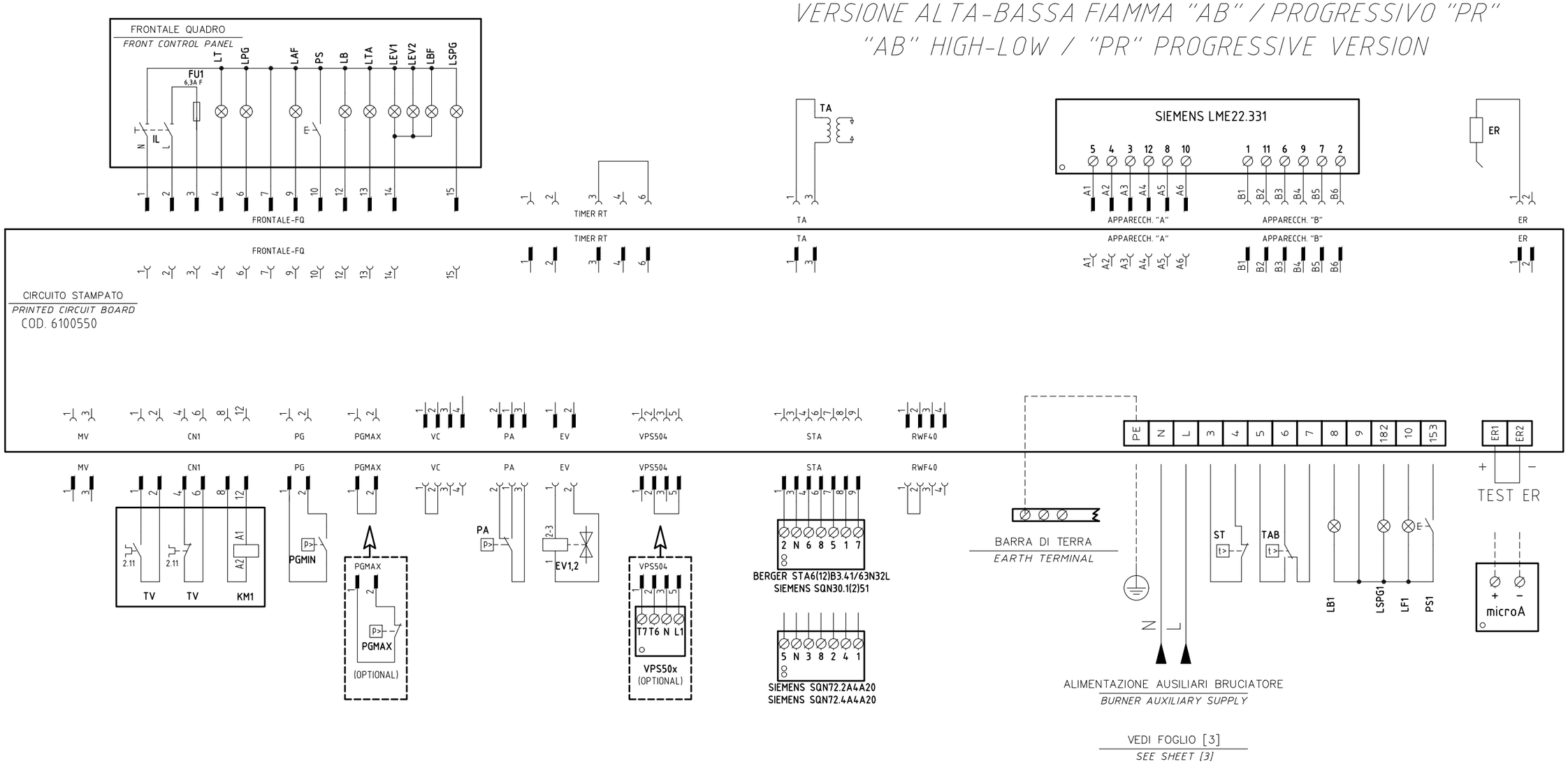

VEDI FOGLIO [3]
SEE SHEET [3]

Data 18/01/2012		PREC.	FOGLIO
Revisione 03		/	1
Dis. N. 18 – 0236		SEGUE	TOTALE
		2	5

VERSIONE MODULANTE "MD"
"MD" MODULATING VERSION

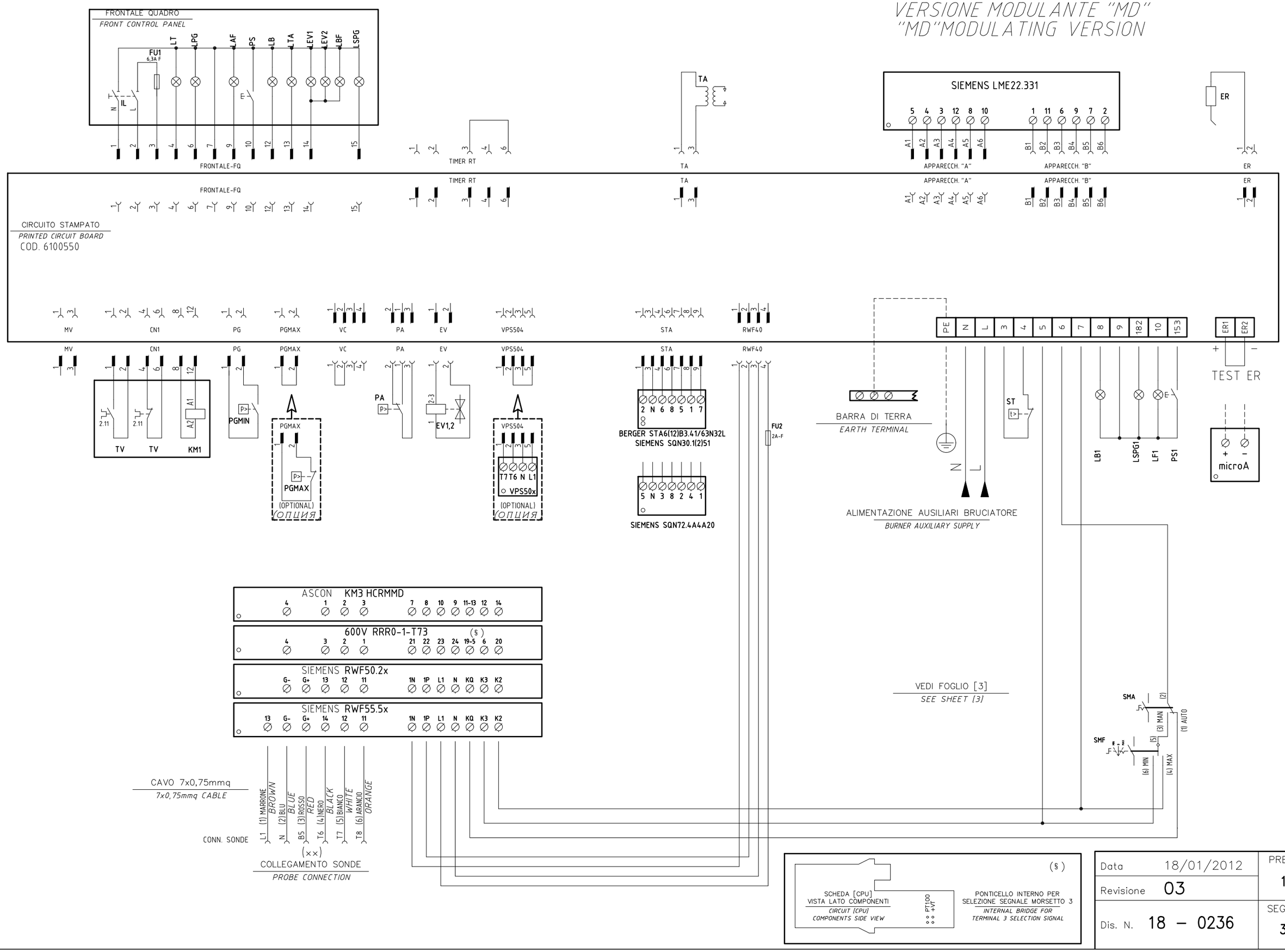

Data 18/01/2012		PREC. 1	FOGLIO 2
Revisione 03			
Dis. N. 18 – 0236		SEGUE 3	TOTALE 5

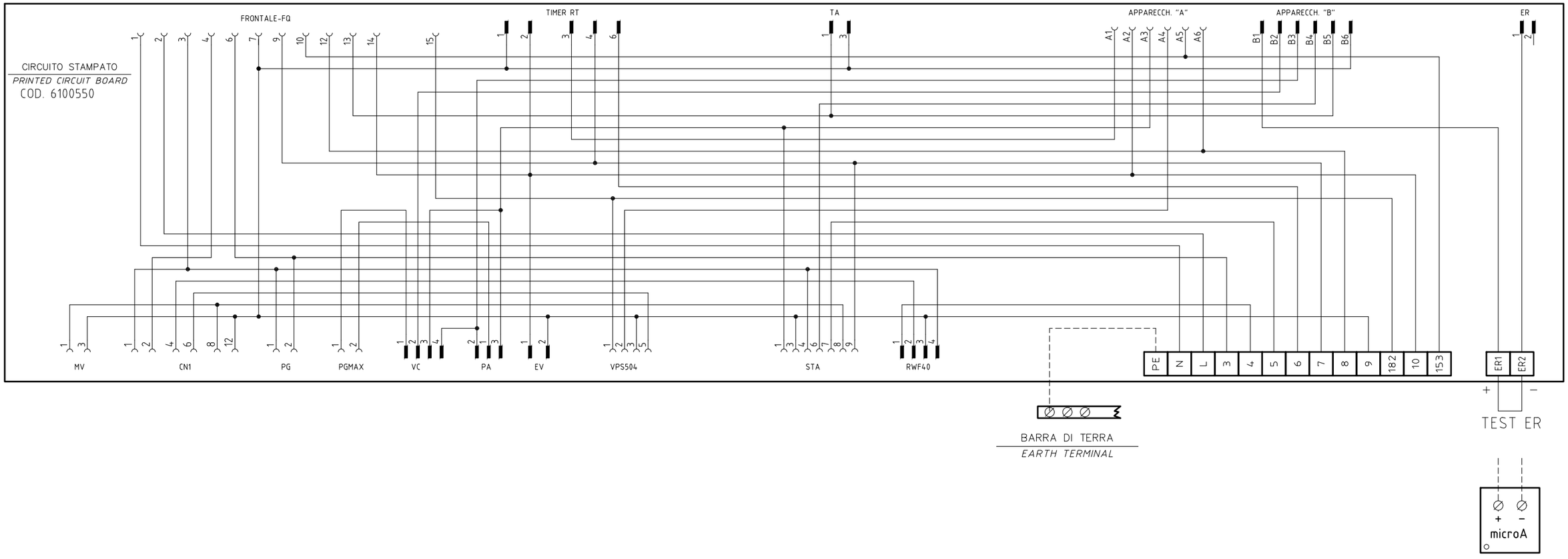

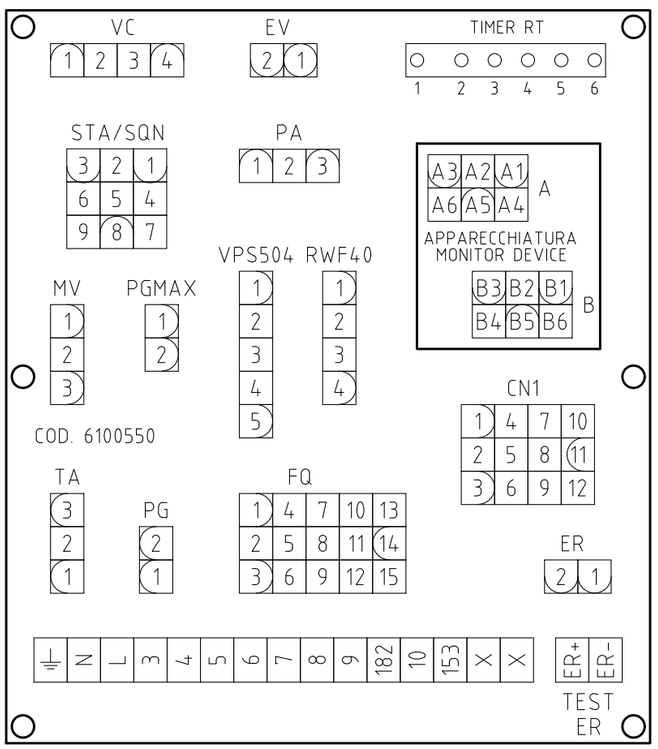

SERVOCOMANDO SERRANDA ARIA
AIR DAMPER ACTUATOR
BERGER STA6(12)B3.41/63N32L

ST2	ALTA FIAMMA *HIGH FLAME*
ST0	SOSTA *STAND-BY*
ST1	BASSA FIAMMA *LOW FLAME*
MV	NON USATA *NOT USED*

SERVOCOMANDO SERRANDA ARIA (ALTERNATIVO)
AIR DAMPER ACTUATOR (ALTERNATIVE)
SIEMENS SQN30.1(2)51A

I	ALTA FIAMMA *HIGH FLAME*
II	SOSTA *STAND-BY*
III	BASSA FIAMMA *LOW FLAME*
V	NON USATA *NOT USED*

SERVOCOMANDO SERRANDA ARIA (ALTERNATIVO)
AIR DAMPER ACTUATOR (ALTERNATIVE)
SIEMENS SQN72.xA4A20

I (ROSSO) *I (RED)*	ALTA FIAMMA *HIGH FLAME*
II (BLU) *II (BLUE)*	SOSTA *STAND-BY*
III (ARANCIO) *III (ORANGE)*	BASSA FIAMMA *LOW FLAME*
IV (NERO) *IV (BLACK)*	NON USATA *NOT USED*

Data 18/01/2012		PREC.	FOGLIO
Revisione 03		2	3
Dis. N. 18 – 0236		SEGUE	TOTALE
		4	5

(xx)

ATTENZIONE COLLEGAMENTO SONDE CON CONNETTORE 7 POLI

WARNING PROBE CONNECTION WITH 7 PINS CONNECTOR

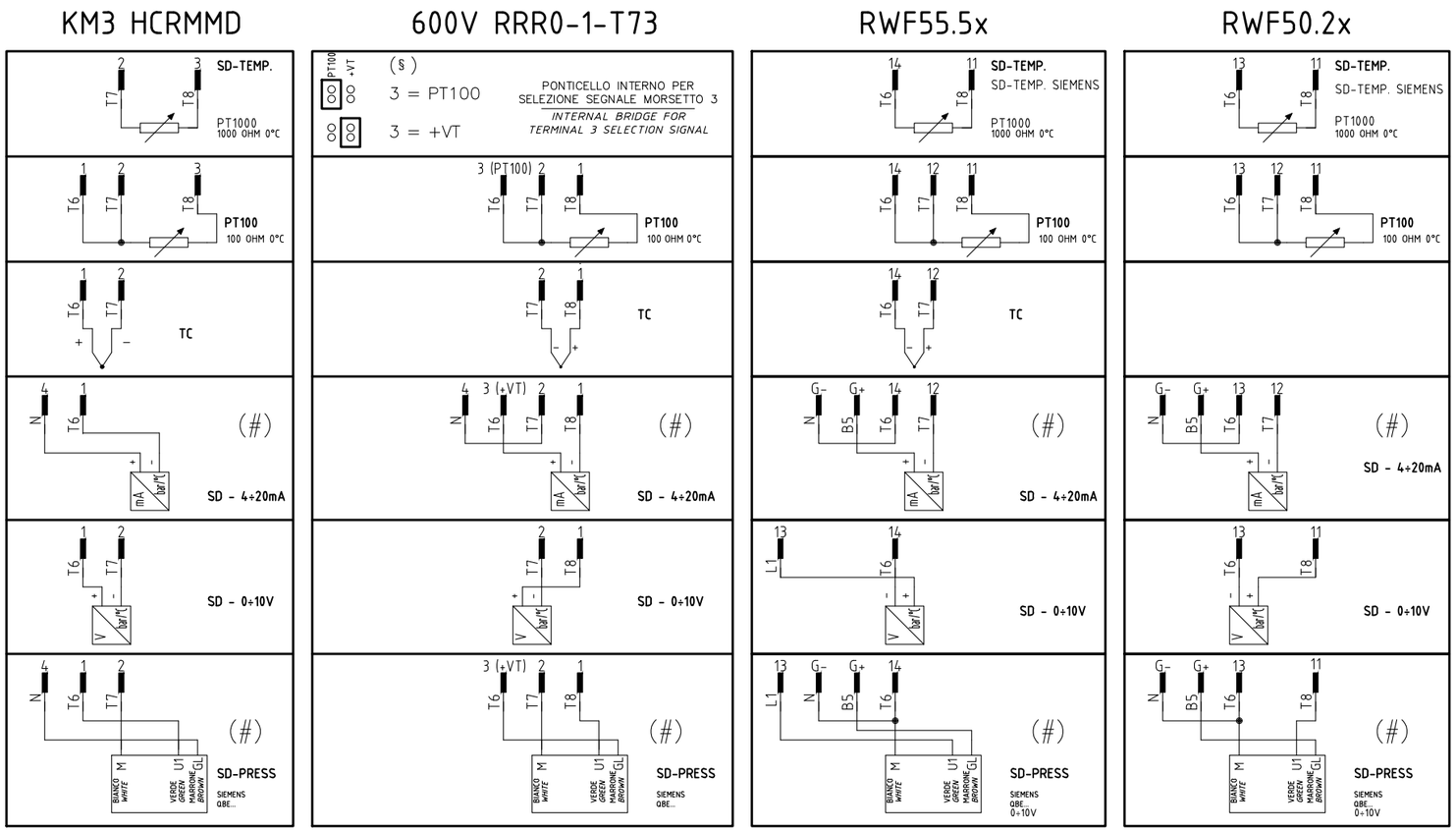

(#)

COLLEGAMENTO SOLO PER TRASDUTTORI PASSIVI

TRASDUCER PASSIVE CONNECTION ONLY

QG - MC1

MORSETTIERA COLLEGAMENTO LINEA E MOTORE TRIFASE

MOTOR THREE PHASES AND ELECTRIC SUPPLY CONNECTION TERMINAL BOARD

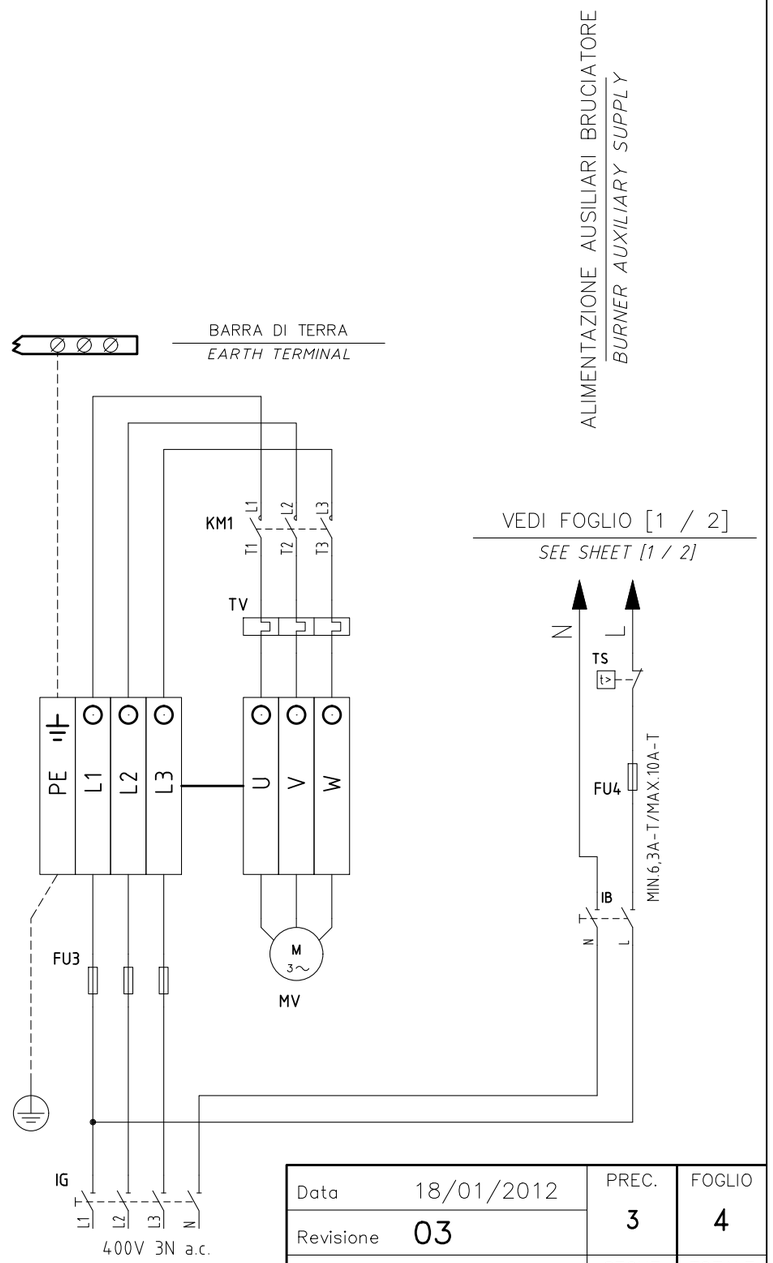

Data 18/01/2012		PREC. 3	FOGLIO 4
Revisione 03			
Dis. N. 18 – 0236		SEGUE 5	TOTALE 5

Sigla/Item	Funzione	Function
600V RRR0-1-T73	REGOLATORE MODULANTE (ALTERNATIVO)	BURNER MODULATOR (ALTERNATIVE)
BERGER STA6(12)B3.41/63N32L	SERVOCOMANDO SERRANDA ARIA	AIR DAMPER ACTUATOR
ER	ELETTRODO RILEVAZIONE FIAMMA	FLAME DETECTION ELECTRODE
EV1,2	ELETTROVALVOLE GAS (O GRUPPO VALVOLE)	GAS ELECTRO-VALVES (OR VALVES GROUP)
FU1	FUSIBILE DI LINEA	LINE FUSE
FU2	FUSIBILE AUSILIARIO	AUXILIARY FUSE
FU3	FUSIBILI LINEA MOTORE VENTILATORE	FAN MOTOR LINE FUSES
FU4	FUSIBILE DI LINEA	LINE FUSE
IB	INTERRUTTORE LINEA BRUCIATORE	BURNER LINE SWITCH
IG	INTERRUTTORE GENERALE	MAINS SWITCH
IL	INTERRUTTORE LINEA AUSILIARI	AUXILIARY LINE SWITCH
KM1	CONTATTORE MOTORE VENTILATORE	FAN MOTOR CONTACTOR
KM3 HCRMMD	REGOLATORE MODULANTE (ALTERNATIVO)	BURNER MODULATOR (ALTERNATIVE)
LAF	LAMPADA SEGNALAZIONE ALTA FIAMMA BRUCIATORE	BURNER IN HIGH FLAME INDICATOR LIGHT
LB	LAMPADA SEGNALAZIONE BLOCCO BRUCIATORE	INDICATOR LIGHT FOR BURNER LOCK-OUT
LB1	LAMPADA SEGNALAZIONE BLOCCO BRUCIATORE	INDICATOR LIGHT FOR BURNER LOCK-OUT
LBF	LAMPADA SEGNALAZIONE BASSA FIAMMA BRUCIATORE	BURNER IN LOW FLAME INDICATOR LIGHT
LEV1	LAMPADA SEGNALAZIONE APERTURA [EV1]	INDICATOR LIGHT FOR OPENING OF ELECTRO-VALVE [EV1]
LEV2	LAMPADA SEGNALAZIONE APERTURA [EV2]	INDICATOR LIGHT FOR OPENING OF ELECTRO-VALVE [EV2]
LF1	LAMPADA SEGNALAZIONE FUNZIONAMENTO BRUCIATORE	INDICATOR LIGHT BURNER OPERATION
LPG	LAMPADA SEGNALAZIONE PRESENZA GAS IN RETE	INDICATOR LIGHT FOR PRESENCE OF GAS IN THE NETWORK
LSPG	LAMPADA SEGNALAZIONE BLOCCO CONTROLLO TENUTA VALVOLE	INDICATOR LIGHT FOR LEAKAGE OF VALVES
LSPG1	LAMPADA SEGNALAZIONE BLOCCO CONTROLLO TENUTA VALVOLE	INDICATOR LIGHT FOR LEAKAGE OF VALVES
LT	LAMPADA SEGNALAZIONE BLOCCO TERMICO	INDICATOR LIGHT FOR MOTOR OVERLOAD THERMAL CUTOUT
LTA	LAMPADA SEGNALAZIONE TRASFORMATORE DI ACCENSIONE	IGNITION TRANSFORMER INDICATOR LIGHT
MV	MOTORE VENTILATORE	FAN MOTOR
PA	PRESSOSTATO ARIA	AIR PRESSURE SWITCH
PGMAX	PRESSOSTATO GAS DI MASSIMA PRESSIONE	MAXIMUM PRESSURE GAS SWITCH
PGMIN	PRESSOSTATO GAS DI MINIMA PRESSIONE	MINIMUM GAS PRESSURE SWITCH
PS	PULSANTE SBLOCCO FIAMMA	FLAME UNLOCK BUTTON
PS1	PULSANTE SBLOCCO FIAMMA	FLAME UNLOCK BUTTON
PT100	SONDA DI TEMPERATURA	TEMPERATURE PROBE
RWF50.2x	REGOLATORE MODULANTE (ALTERNATIVO)	BURNER MODULATOR (ALTERNATIVE)
RWF55.5x	REGOLATORE MODULANTE (ALTERNATIVO)	BURNER MODULATOR (ALTERNATIVE)
SD-PRESS	SONDA DI PRESSIONE	PRESSURE PROBE
SD-TEMP.	SONDA DI TEMPERATURA	TEMPERATURE PROBE
SD - 0÷10V	TRASDUTTORE USCITA IN TENSIONE	TRANSDUCER VOLTAGE OUTPUT
SD - 4÷20mA	TRASDUTTORE USCITA IN CORRENTE	TRANSDUCER CURRENT OUTPUT
SIEMENS LME22.331	APPARECCHIATURA CONTROLLO FIAMMA	CONTROL BOX
SIEMENS SQN30.1(2)51	SERVOCOMANDO SERRANDA ARIA (ALTERNATIVO)	AIR DAMPER ACTUATOR (ALTERNATIVE)
SIEMENS SQN72.2A4A20	SERVOCOMANDO SERRANDA ARIA (ALTERNATIVO)	AIR DAMPER ACTUATOR (ALTERNATIVE)
SIEMENS SQN72.4A4A20	SERVOCOMANDO SERRANDA ARIA (ALTERNATIVO)	AIR DAMPER ACTUATOR (ALTERNATIVE)
SMA	SELETTORE MANUALE/AUTOMATICO	MANUAL/AUTOMATIC SWITCH
SMF	SELETTORE MANUALE FUNZIONAMENTO MIN-0-MAX	MIN-0-MAX MANUAL OPERATION SWITCH
ST	SERIE TERMOSTATI/PRESSOSTATI	SERIES OF THERMOSTATS OR PRESSURE SWITCHES
TA	TRASFORMATORE DI ACCENSIONE	IGNITION TRANSFORMER
TAB	TERMOSTATO/PRESSOSTATO ALTA-BASSA FIAMMA	HIGH-LOW THERMOSTAT/PRESSURE SWITCHES
TC	TERMOCOPPIA	THERMOCOUPLE
TS	TERMOSTATO/PRESSOSTATO DI SICUREZZA	SAFETY THERMOSTAT OR PRESSURE SWITCH
TV	TERMICO MOTORE VENTILATORE	FAN MOTOR THERMAL
VPS50x	CONTROLLO DI TENUTA VALVOLE GAS (OPTIONAL)	GAS PROVING SYSTEM (OPTIONAL)
microA	MICROAMPEROMETRO	MICROAMMETER

SIEMENS LME11/21/22 CONTROL BOX

Preconditions for burner startup

- Burner control must be reset
- All contacts in the line are closed, request for heat
- No undervoltage
- Air pressure switch LP must be in its “no-load” position
- Fan motor or AGK25 is closed
- Flame detector is darkened and there is no extraneous light

Undervoltage

Safety shutdown from the operating position takes place should mains voltage drop below about AC 175 V (at UN = AC 230 V)

Restart is initiated when mains voltage exceeds about AC 185 V (at UN = AC 230 V).

Controlled intermittent operation

After no more than 24 hours of continuous operation, the burner control will initiate automatic controlled shutdown followed by a restart.

Reversed polarity protection with ionization

If the connections of live conductor (terminal 12) and neutral conductor (terminal 2) aremixed up, the burner control will initiate lockout at the end of the safety time “TSA”.

Control sequence in the event of fault

If lockout occurs, the outputs for the fuel valves, the burner motor and the ignition equipment will immediately be deactivated (< 1 second).

Operational status indication

In normal operation, the different operating states are showed by means of the multicolor LED, inside the lockout reset button:

LED **red LED** **yellow LED** **green LED**	..... Steady on ❍... Off

During startup, status indication takes place according to the table:

Status	Color code	Color
Waiting time tw, other waiting states	❍.....	Off
Ignition phase, ignition controlled	● ❍ ● ❍ ● ❍ ● ❍ ● ❍ ●	Flashing yellow
Operation, flame ok	□.....	Green
Operation, flame not ok	□ ❍ □ ❍ □ ❍ □ ❍ □ ❍	Flashing green
Extraneous light on burner startup	□ ▲ □ ▲ □ ▲ □ ▲ □ ▲	Green - red
Undervoltage	● ▲ ● ▲ ● ▲ ● ▲ ● ▲	Yellow - red
Fault, alarm	▲.....	Red
Error code output (refer to “Error code table”)	▲❍ ▲❍ ▲❍ ▲❍	Flashing red

START-UP PROGRAM

As far as the startup program, see its time diagram:

A Start command (switching on)

This command is triggered by control thermostat / pressure controller «R». Terminal 12 receives voltage and the programming mechanism starts running. On completion of waiting time «tw» with the LME21..., or after air damper «SA» has reached the nominal load position (on completion of «t11») with the LME22..., fan motor «M» will be started.

tw Waiting time

During the waiting time, air pressure monitor «LP» and flame relay «FR» are tested for correct contact positions.

t11 Programmed opening time for actuator «SA»

(Only with LME22...) The air damper opens until the nominal load position is reached. Only then will fan motor «M» be switched on.

t10 Specified time for air pressure signal

On completion of this period of time, the set air pressure must have built up, or else lockout will occur.

t1 Prepurge time

Purging the combustion chamber and the secondary heating surfaces: required with low-fire air volumes when using the LME21... and with nominal load air volumes when using the LME22.... The diagrams show the so-called prepurge time «t1» during which air pressure monitor «LP» must indicate that the required air pressure is available. The effective prepurge time «t1» comprises interval end «tw» through «t3».

t12 Programmed closing time for actuator «SA»

(Only with LME22...)During «t12», the air damper travels to the low-fire position.

t3 Preignition time

During «t3» and up to the end of «TSA», flame relay «FR» is forced to close. On completion of «t3», the release of fuel is triggered at terminal 4.

TSA Ignition safety time

On completion of «TSA», a flame signal must be present at terminal 1. That flame signal must be continuously available until shutdown occurs, or else flame relay «FR» will be deenergized, resulting in lockout.

t4 Interval BV1 and BV2-LR

Time between the end of TSA and the signal to the second fuel valve BV2 or to the load controller LR

B - B' Interval for flame establishment

C Burner operation position

C - D Burner operation (heat production)

D Controlled by "R" shutdown

The burner stops and the control device is ready for a new startup.

LME11 control sequence

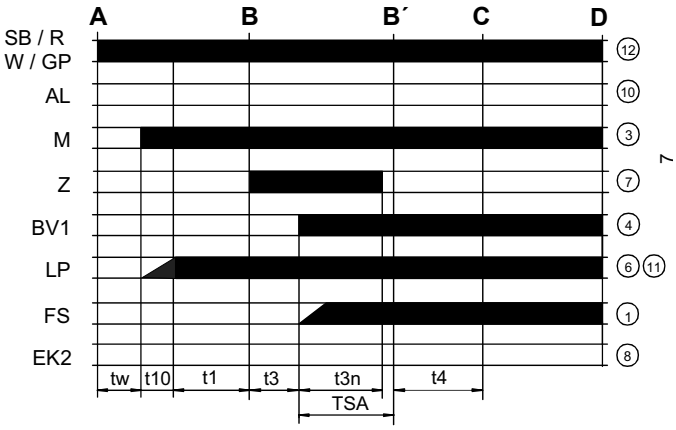

LME21 control sequence

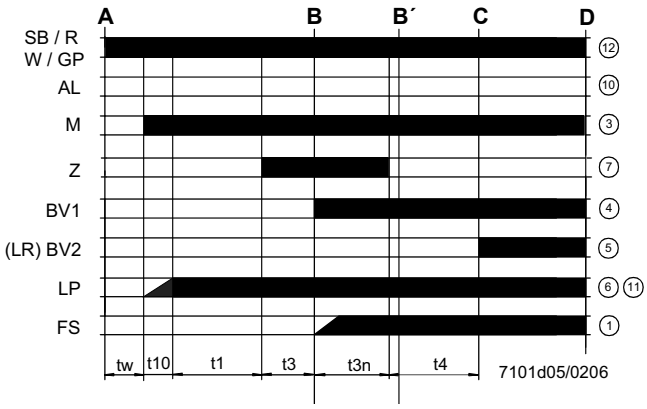

LME22 control sequence

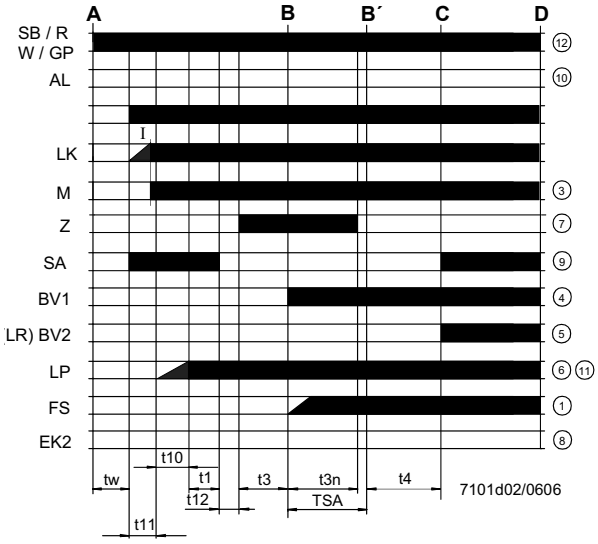

Control sequence

tw	Waiting time
t1	Purge time
TSA	Ignition safety time
t3	Preignition time
t3n	Postignition time
t4	Interval between BV1 and BV2/LR
t10	Specified time for air pressure signal
t11	Programmed opening time for actuator SA
t12	Programmed closing time for actuator SA

LME11 connection diagram

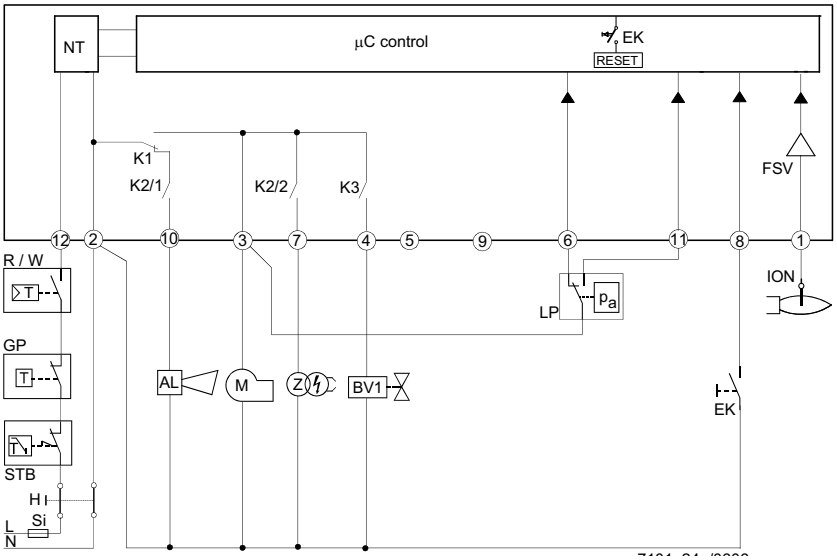

LME21 connection diagram

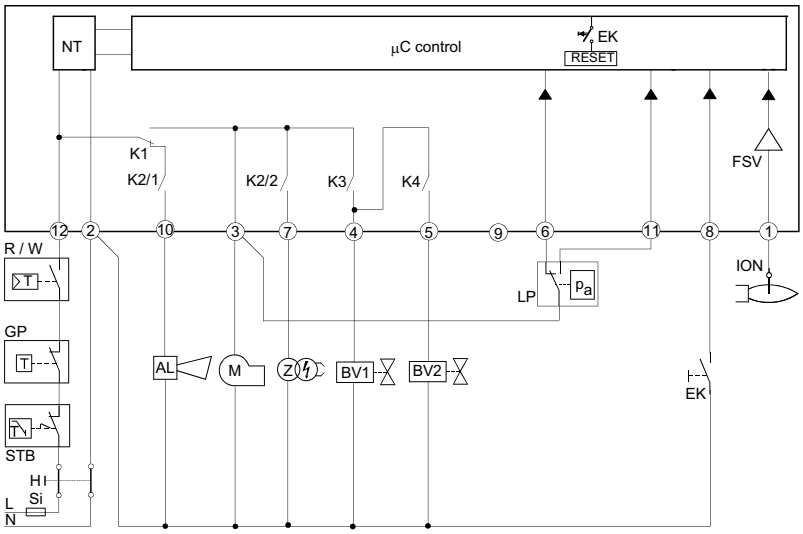

LME22 connection diagram

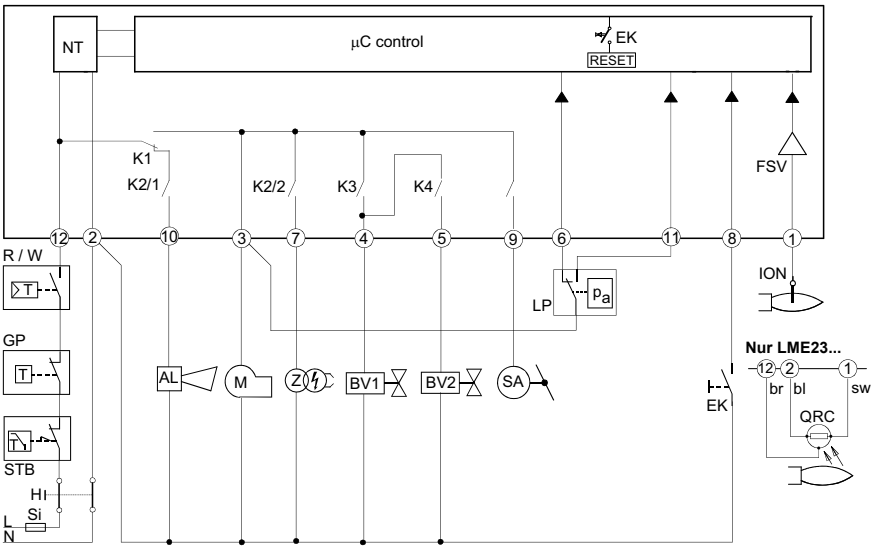

Connection diagram

AL	Error message (alarm)
BV	Fuel valve
EK2	Remote lockout reset button
FS	Flame signal
GP	Gas pressure switch
LP	Air pressure switch
LR	Load controller
M	Fan motor
R	Control thermostat/pressurestat
SB	Safety limit thermostat
W	Limit thermostat /pressure switch
Z	Ignition transformer

CONTROL PROGRAM IN THE EVENT OF FAULT

- If a fault occurs, all outputs will immediately be deactivated (in less than 1s).
- After an interruption of power, a restart will be made with the full program sequence.
- If the operating voltage drops below the undervoltage thresold, a safety shutdown is performed.
- If the operating voltage exceeds the undervoltage thresold, a restart will be performed.
- In case of extraneous light during “t1”, a lockout occurs.
- In case of extraneous light during “tw”, there is a prevention of startup and a lockout after 30 seconds.
- In case of no flame at the end of TSA, there will be max. 3 repetitions of the startup cycle, followed by a lockout at the end of TSA, for mod. LME11..; directly a lockout at the end of TSA for LME21-22 models.
- For LME11 model: if a loss of flame occurs during operation, in case of an establishment of flame at the end of TSA, there will be max. 3 repetitions, otherwise a lockout will occur.
- For LME21-22 models: if a loss of flame occurs during operation, there will be a lockout.
- If the contact of air pressure monitor LP is in working position, a prevention of startup and lockout after 65 seconds will occur.
- IIf the contact of air pressure monitor LP is in normal position, a lockout occurs at the end of t10.
- If no air pressure signal is present after completion of t1, a lockout will occur.

CONTROL BOX LOCKED

In the event of lockout, the LME.. remains locked and the red signal lamp (LED) will light up.The burner control can immediately be reset. This state is also mantained in the case fo mains failure.

DIAGNOSITICS OF THE CASUE OF FAULT

- Press the lockout reset button for more than 3 seconds to activate the visual diagnostics.
- Count the number of blinks of the red signsl lamp and check the fault condition on the “Error code table” (the device repeats the blinks for regular intervals).

During diagnostics, the control outputs are deactivated:

- the burner remains shut down;
- external fault indication is deactivated;
- fault status is showed by the red LED, inside the LME’s lockout reset buttonaccording to the “Error code table”:

ERROR CODE TABLE	
2 blinks **	**No establishment of flame at the end of TSA** - Faulty or soiled fuel valves - Faulty or soiled flame detector - Inadequate adjustement of burner, no fuel - Faulty ignition equipment
3 blinks ***	**The air pressure switch does not switch or remains in idle position:** - LP is faulty - Loss of air pressure signal after t10 - LPis welded in normal position.
4 blinks ****	- Extraneous light when burner starts up.
5 blinks *****	- LP is working position.
6 blinks *****	Free.
7 blinks *******	**Loss of flame during operation** - Faulty or soiled fuel valves - Faulty or soiled flame detector - Inadequate adjustement of burner
8 ÷ 9 blinks	Free
10 blinks **********	**Faulty output contacts** ***Attention: “lockout” remote signal (terminal no. 10) not enabled*** - Wiring error - Anomalous voltage on ouput terminals - Other faults
14 blinks ************ (only for LME4x)**	- CPI contact (gas valve microswitch) not closed.

RESETTING THE BURNER CONTROL

When lockout occurs, the burner control can immediately be reset, by pressing the lockout reset button for about 1..3 seconds. The LME.. can only be reset when all contacts in the line are closed and when there is no undervoltage.

LIMITATION OF REPETITIONS (only for LME11.. model)

If no flame is established at the end of TSA, or if the flame is lost during operation, a maximum of 3 repetitions per controller startup can be performed via “R”, otherwise lockout will be initiated. Counting of repetitions is restarted each time a controlled startup via “R” takes place.

⚠ **Condensation, formation of ice and ingress of water are not permitted!**

TECHNICAL CHARACTERISTICS

Mains voltage	120V AC +10% / -15% 230V AC +10% / -15%
Frequency	50 ... 60 Hz +/- 6%
Power consumption	12VA
External primary fuse	max. 10 A (slow)
input current at terminal 12	max. 5 A
Detection cable length	max. 3m (for electrode)
Detection cable length	max. 20 m (laid separately, for QRA probe)
Reset cable length	max. 20 m (posato separatamente)
Term. 8 & 10 cable length	max. 20 m
Thermostat cable length and other terminals	max. 3 m
Safety class	I
Index of protection	IP40 (to be ensured during mounting)
Operating conditions	-20... +60 °C, < 95% UR
Storage conditions	-20... +60 °C, < 95% UR
Weight	approx. 160 g

C.I.B. UNIGAS S.p.A.
Via L.Galvani, 9 - 35011 Campodarsego (PD) - ITALY
Tel. +39 049 9200944 - Fax +39 049 9200945/9201269
web site: www.cibunigas.it - e-mail: cibunigas@cibunigas.it

Note: specifications and data subject to change. Errors and omissions excepted.

VERSIONE ALTA-BASSA FIAMMA "AB" / PROGRESSIVO "PR"
"AB" HIGH-LOW / "PR" PROGRESSIVE VERSION

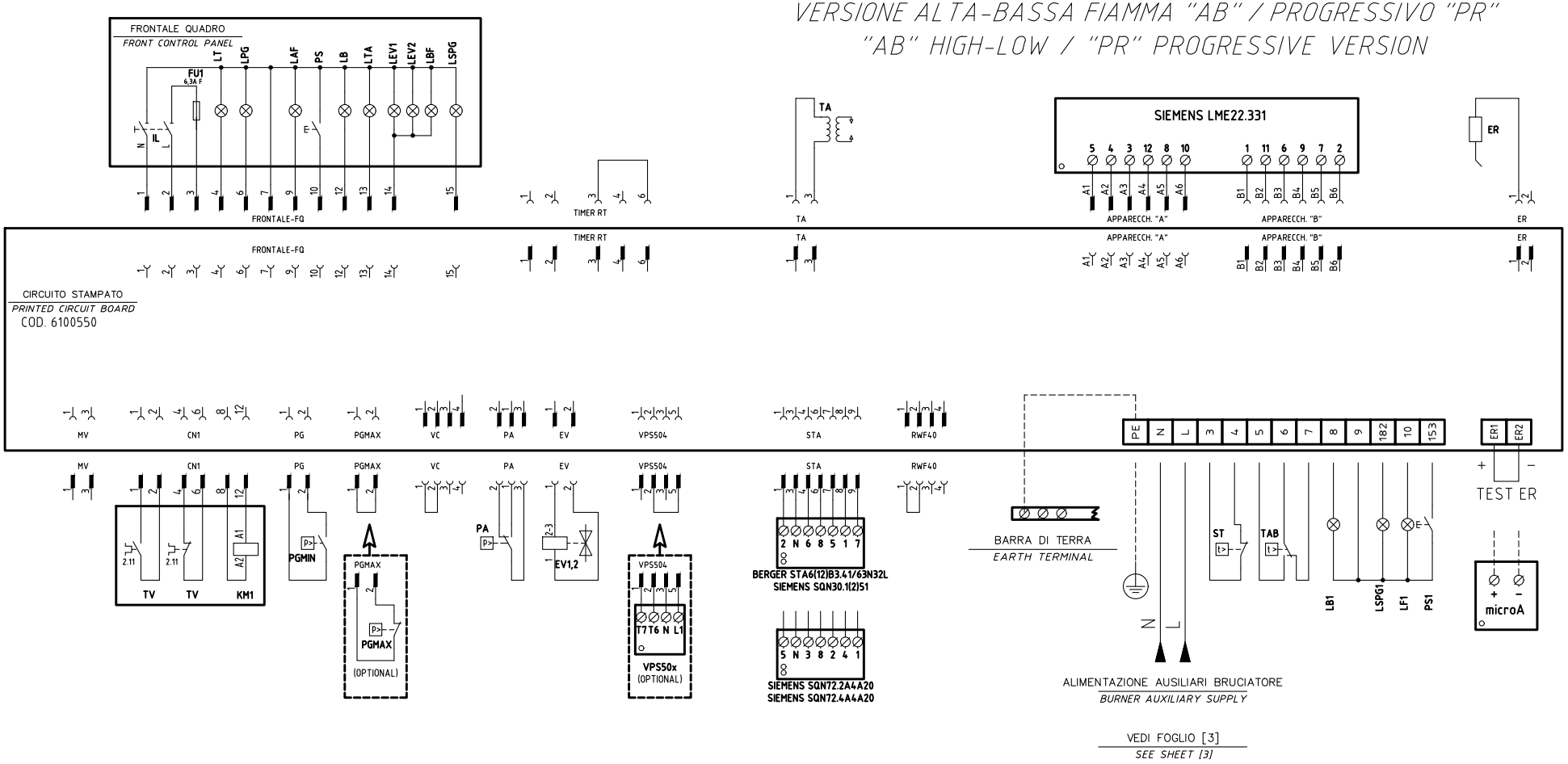

REV.	MODIFICA	DATA	FIRME
03	MODULATOR UPDATE	10/09/14	U. PINTON
02	AGGIUNTO/ADDED RWF40.0xx	07/03/14	U. PINTON
01	AGGIUNTO/ADDED "600V"	20/06/12	U. PINTON

UNIGAS

Impianto: TIPI/TYPES P61 ÷ P73/LX60/LX65/LX72
MODELLO x–.AB(PR)(MD).x.xx.A.xx

Descrizione: VERSIONE "MD" CON RWF5x.xx / 600V / KM3 E SMA+SMF
VERSION "MD" WITH RWF5x.xx / 600V / KM3 AND SMA+SMF

Ordine

Commessa

Esecutore: U. PINTON

Data Controllato: 10/09/2014

Controllato: E. CAVALLI

Data: 18/01/2012

Revisione: 03

Dis. N. 18 – 0236

PREC.: /

FOGLIO: 1

SEGUE: 2

TOTALE: 5

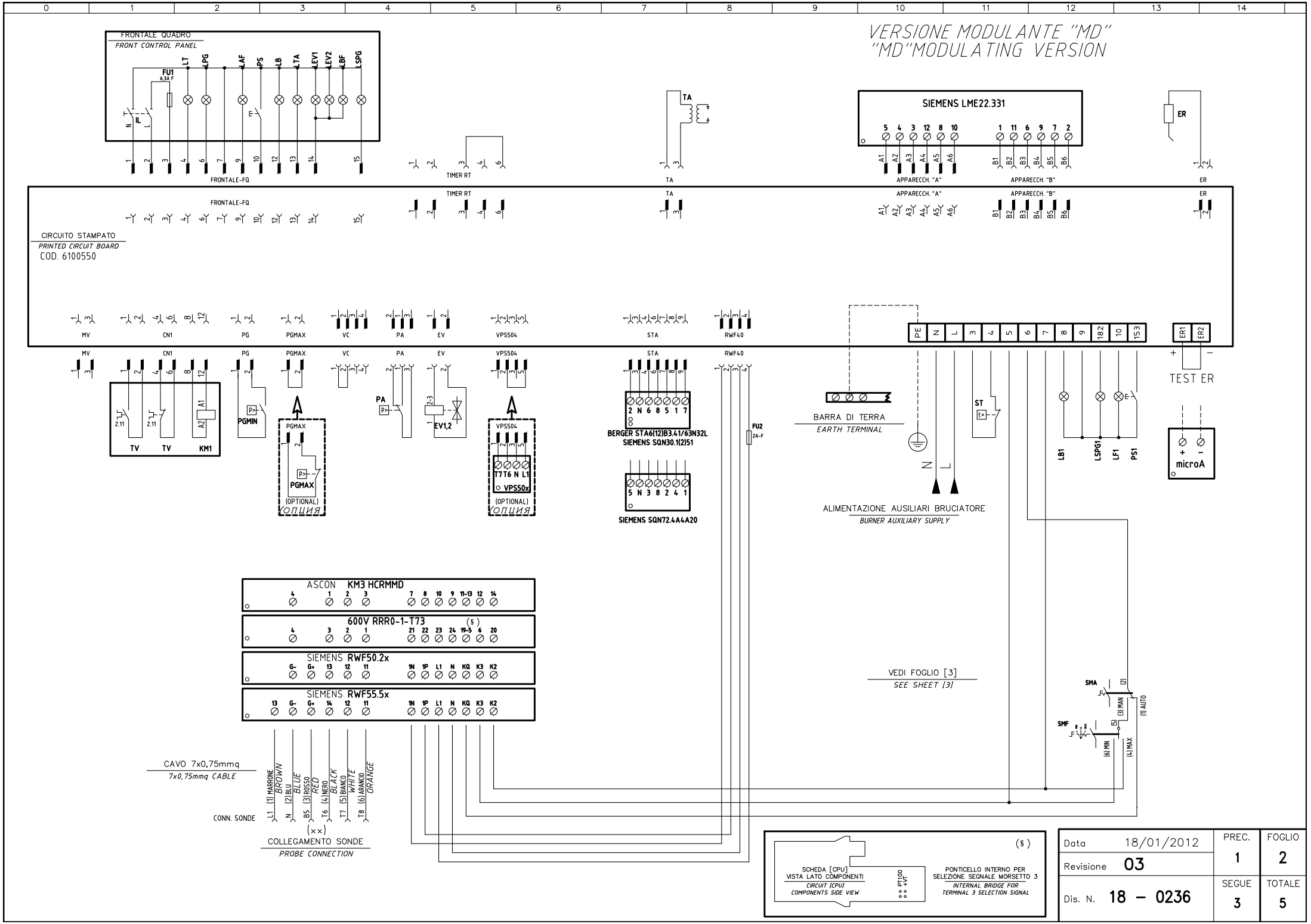
VERSIONE MODULANTE "MD"
"MD" MODULATING VERSION
FRONTALE QUADRO
FRONT CONTROL PANEL
FU1
6,3A F
LT
LPG
LAF
PS
LB
LTA
LEV1
LEV2
LBF
LSPG
IL
FRONTALE-FQ
TIMER RT
TA
SIEMENS LME22.331
APPARECCH. "A"
APPARECCH. "B"
ER
CIRCUITO STAMPATO
PRINTED CIRCUIT BOARD
COD. 6100550
MV
CN1
PG
PGMAX
VC
PA
EV
VPS504
STA
RWF40
PE
N
L
TEST ER
TV
KM1
PGMIN
PGMAX
(OPTIONAL)
ОПЦИЯ
EV1,2
VPS50x
BERGER STA6(12)B3.41/63N32L
SIEMENS SQN30.1(2)51
SIEMENS SQN72.4A4A20
FU2
2A-F
BARRA DI TERRA
EARTH TERMINAL
ST
LB1
LSPG1
LF1
PS1
microA
ALIMENTAZIONE AUSILIARI BRUCIATORE
BURNER AUXILIARY SUPPLY
ASCON KM3 HCRMMD
600V RRR0-1-T73
SIEMENS RWF50.2x
SIEMENS RWF55.5x
VEDI FOGLIO [3]
SEE SHEET [3]
SMA
SMF
(1) AUTO
(3) MAN
(4) MAX
(6) MIN
CAVO 7x0,75mmq
7x0,75mmq CABLE
CONN. SONDE
(1) MARRONE BROWN
(2) BLU BLUE
(3) ROSSO RED
(4) NERO BLACK
(5) BIANCO WHITE
(6) ARANCIO ORANGE
COLLEGAMENTO SONDE
PROBE CONNECTION
SCHEDA [CPU]
VISTA LATO COMPONENTI
CIRCUIT [CPU]
COMPONENTS SIDE VIEW
PT100
+VT
PONTICELLO INTERNO PER
SELEZIONE SEGNALE MORSETTO 3
INTERNAL BRIDGE FOR
TERMINAL 3 SELECTION SIGNAL
Data 18/01/2012
Revisione 03
Dis. N. 18 – 0236
PREC. 1
FOGLIO 2
SEGUE 3
TOTALE 5

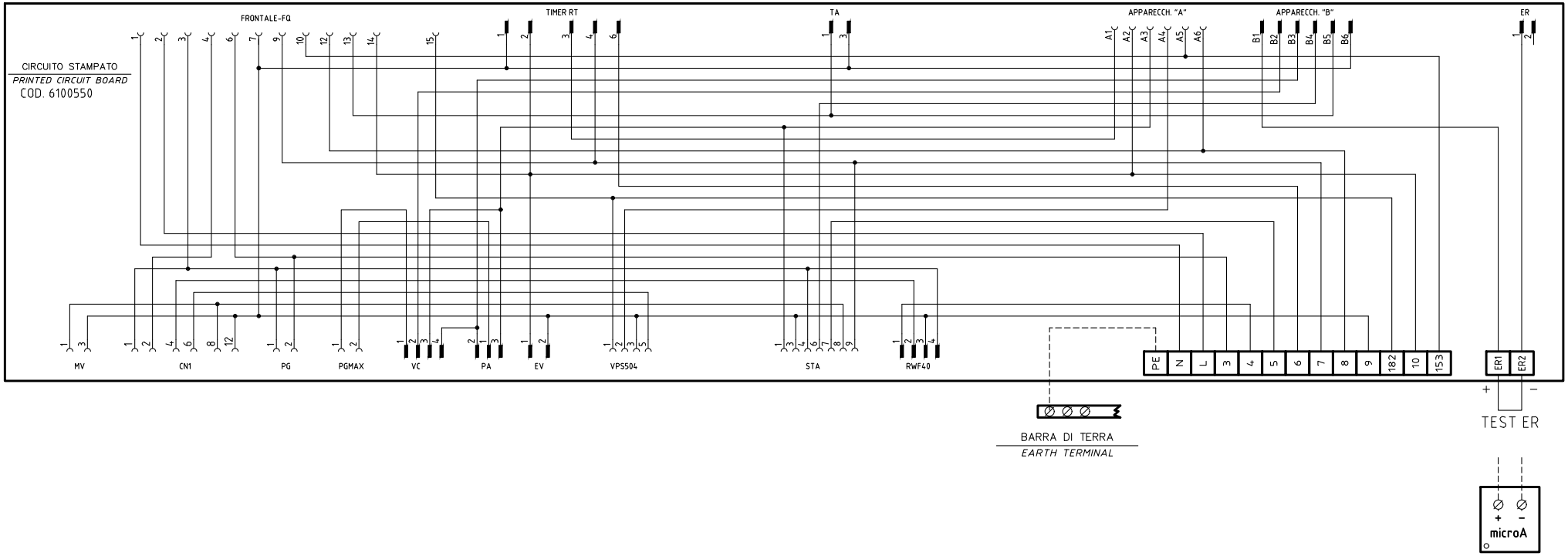

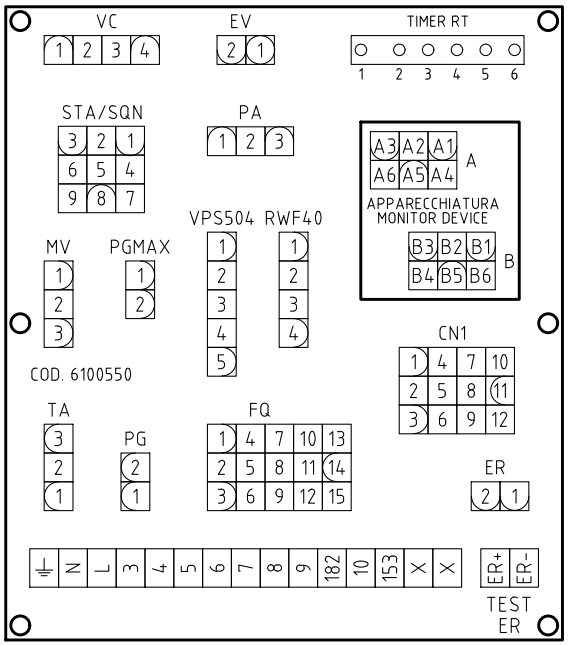

SERVOCOMANDO SERRANDA ARIA
AIR DAMPER ACTUATOR
BERGER STA6(12)B3.41/63N32L

ST2	ALTA FIAMMA *HIGH FLAME*
ST0	SOSTA *STAND-BY*
ST1	BASSA FIAMMA *LOW FLAME*
MV	NON USATA *NOT USED*

SERVOCOMANDO SERRANDA ARIA (ALTERNATIVO)
AIR DAMPER ACTUATOR (ALTERNATIVE)
SIEMENS SQN30.1(2)51A

I	ALTA FIAMMA *HIGH FLAME*
II	SOSTA *STAND-BY*
III	BASSA FIAMMA *LOW FLAME*
V	NON USATA *NOT USED*

SERVOCOMANDO SERRANDA ARIA (ALTERNATIVO)
AIR DAMPER ACTUATOR (ALTERNATIVE)
SIEMENS SQN72.xA4A20

I (ROSSO) *I (RED)*	ALTA FIAMMA *HIGH FLAME*
II (BLU) *II (BLUE)*	SOSTA *STAND-BY*
III (ARANCIO) *III (ORANGE)*	BASSA FIAMMA *LOW FLAME*
IV (NERO) *IV (BLACK)*	NON USATA *NOT USED*

Data	18/01/2012	PREC.	FOGLIO
Revisione	03	2	3
Dis. N.	18 – 0236	SEGUE	TOTALE
		4	5

(××)

ATTENZIONE COLLEGAMENTO SONDE CON CONNETTORE 7 POLI

WARNING PROBE CONNECTION WITH 7 PINS CONNECTOR

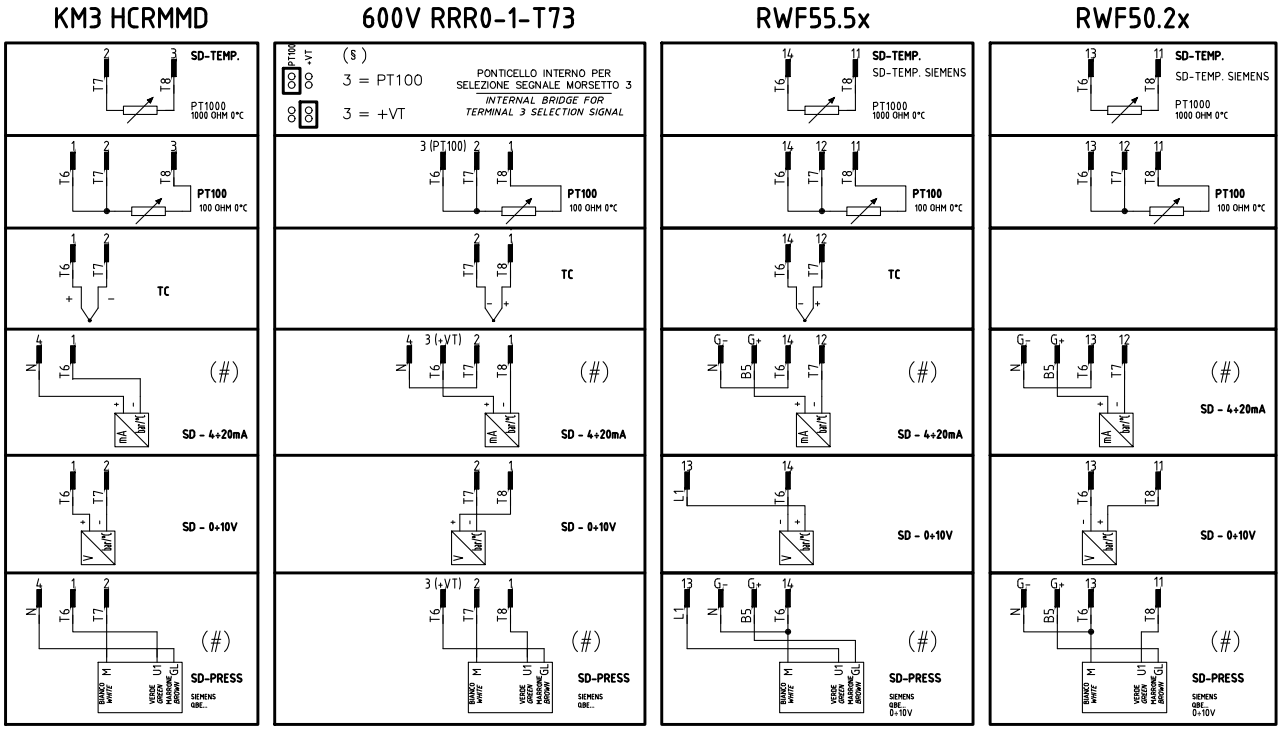

(#)
COLLEGAMENTO SOLO PER TRASDUTTORI PASSIVI
TRASDUCER PASSIVE CONNECTION ONLY

QG - MC1

MORSETTIERA COLLEGAMENTO LINEA E MOTORE TRIFASE

MOTOR THREE PHASES AND ELECTRIC SUPPLY CONNECTION TERMINAL BOARD

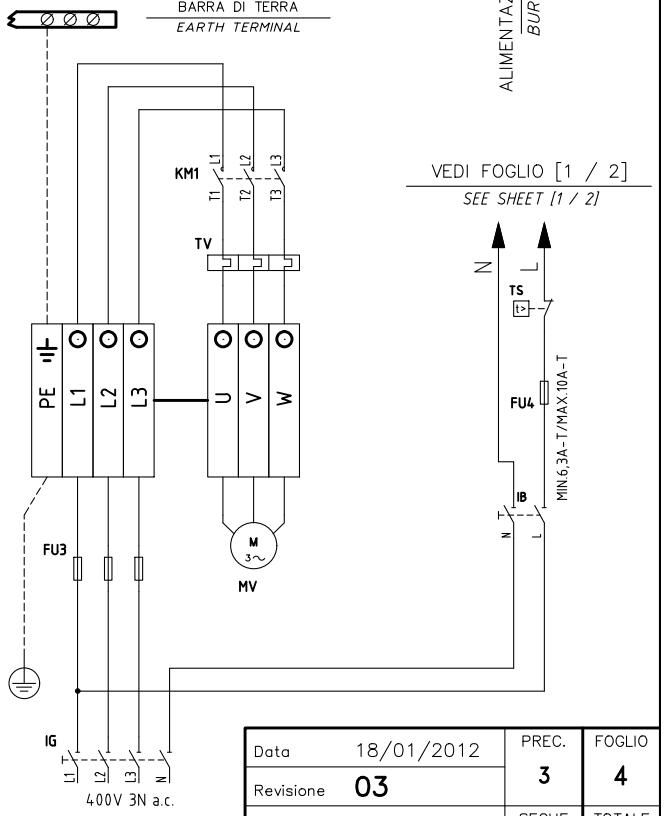

Data	18/01/2012	PREC. 3	FOGLIO 4
Revisione	03		
Dis. N.	18 – 0236	SEGUE 5	TOTALE 5

Sigla/Item	Funzione	Function
600V RRR0-1-T73	REGOLATORE MODULANTE (ALTERNATIVO)	BURNER MODULATOR (ALTERNATIVE)
BERGER STA6(12)B3.41/63N32L	SERVOCOMANDO SERRANDA ARIA	AIR DAMPER ACTUATOR
ER	ELETTRODO RILEVAZIONE FIAMMA	FLAME DETECTION ELECTRODE
EV1,2	ELETTROVALVOLE GAS (O GRUPPO VALVOLE)	GAS ELECTRO-VALVES (OR VALVES GROUP)
FU1	FUSIBILE DI LINEA	LINE FUSE
FU2	FUSIBILE AUSILIARIO	AUXILIARY FUSE
FU3	FUSIBILI LINEA MOTORE VENTILATORE	FAN MOTOR LINE FUSES
FU4	FUSIBILE DI LINEA	LINE FUSE
IB	INTERRUTTORE LINEA BRUCIATORE	BURNER LINE SWITCH
IG	INTERRUTTORE GENERALE	MAINS SWITCH
IL	INTERRUTTORE LINEA AUSILIARI	AUXILIARY LINE SWITCH
KM1	CONTATTORE MOTORE VENTILATORE	FAN MOTOR CONTACTOR
KM3 HCRMMD	REGOLATORE MODULANTE (ALTERNATIVO)	BURNER MODULATOR (ALTERNATIVE)
LAF	LAMPADA SEGNALAZIONE ALTA FIAMMA BRUCIATORE	BURNER IN HIGH FLAME INDICATOR LIGHT
LB	LAMPADA SEGNALAZIONE BLOCCO BRUCIATORE	INDICATOR LIGHT FOR BURNER LOCK-OUT
LB1	LAMPADA SEGNALAZIONE BLOCCO BRUCIATORE	INDICATOR LIGHT FOR BURNER LOCK-OUT
LBF	LAMPADA SEGNALAZIONE BASSA FIAMMA BRUCIATORE	BURNER IN LOW FLAME INDICATOR LIGHT
LEV1	LAMPADA SEGNALAZIONE APERTURA [EV1]	INDICATOR LIGHT FOR OPENING OF ELECTRO-VALVE [EV1]
LEV2	LAMPADA SEGNALAZIONE APERTURA [EV2]	INDICATOR LIGHT FOR OPENING OF ELECTRO-VALVE [EV2]
LF1	LAMPADA SEGNALAZIONE FUNZIONAMENTO BRUCIATORE	INDICATOR LIGHT BURNER OPERATION
LPG	LAMPADA SEGNALAZIONE PRESENZA GAS IN RETE	INDICATOR LIGHT FOR PRESENCE OF GAS IN THE NETWORK
LSPG	LAMPADA SEGNALAZIONE BLOCCO CONTROLLO TENUTA VALVOLE	INDICATOR LIGHT FOR LEAKAGE OF VALVES
LSPG1	LAMPADA SEGNALAZIONE BLOCCO CONTROLLO TENUTA VALVOLE	INDICATOR LIGHT FOR LEAKAGE OF VALVES
LT	LAMPADA SEGNALAZIONE BLOCCO TERMICO	INDICATOR LIGHT FOR MOTOR OVERLOAD THERMAL CUTOUT
LTA	LAMPADA SEGNALAZIONE TRASFORMATORE DI ACCENSIONE	IGNITION TRANSFORMER INDICATOR LIGHT
MV	MOTORE VENTILATORE	FAN MOTOR
PA	PRESSOSTATO ARIA	AIR PRESSURE SWITCH
PGMAX	PRESSOSTATO GAS DI MASSIMA PRESSIONE	MAXIMUM PRESSURE GAS SWITCH
PGMIN	PRESSOSTATO GAS DI MINIMA PRESSIONE	MINIMUM GAS PRESSURE SWITCH
PS	PULSANTE SBLOCCO FIAMMA	FLAME UNLOCK BUTTON
PS1	PULSANTE SBLOCCO FIAMMA	FLAME UNLOCK BUTTON
PT100	SONDA DI TEMPERATURA	TEMPERATURE PROBE
RWF50.2x	REGOLATORE MODULANTE (ALTERNATIVO)	BURNER MODULATOR (ALTERNATIVE)
RWF55.5x	REGOLATORE MODULANTE (ALTERNATIVO)	BURNER MODULATOR (ALTERNATIVE)
SD-PRESS	SONDA DI PRESSIONE	PRESSURE PROBE
SD-TEMP.	SONDA DI TEMPERATURA	TEMPERATURE PROBE
SD - 0÷10V	TRASDUTTORE USCITA IN TENSIONE	TRANSDUCER VOLTAGE OUTPUT
SD - 4÷20mA	TRASDUTTORE USCITA IN CORRENTE	TRANSDUCER CURRENT OUTPUT
SIEMENS LME22.331	APPARECCHIATURA CONTROLLO FIAMMA	CONTROL BOX
SIEMENS SQN30.1(2)51	SERVOCOMANDO SERRANDA ARIA (ALTERNATIVO)	AIR DAMPER ACTUATOR (ALTERNATIVE)
SIEMENS SQN72.2A4A20	SERVOCOMANDO SERRANDA ARIA (ALTERNATIVO)	AIR DAMPER ACTUATOR (ALTERNATIVE)
SIEMENS SQN72.4A4A20	SERVOCOMANDO SERRANDA ARIA (ALTERNATIVO)	AIR DAMPER ACTUATOR (ALTERNATIVE)
SMA	SELETTORE MANUALE/AUTOMATICO	MANUAL/AUTOMATIC SWITCH
SMF	SELETTORE MANUALE FUNZIONAMENTO MIN-0-MAX	MIN-0-MAX MANUAL OPERATION SWITCH
ST	SERIE TERMOSTATI/PRESSOSTATI	SERIES OF THERMOSTATS OR PRESSURE SWITCHES
TA	TRASFORMATORE DI ACCENSIONE	IGNITION TRANSFORMER
TAB	TERMOSTATO/PRESSOSTATO ALTA-BASSA FIAMMA	HIGH-LOW THERMOSTAT/PRESSURE SWITCHES
TC	TERMOCOPPIA	THERMOCOUPLE
TS	TERMOSTATO/PRESSOSTATO DI SICUREZZA	SAFETY THERMOSTAT OR PRESSURE SWITCH
TV	TERMICO MOTORE VENTILATORE	FAN MOTOR THERMAL
VPS50x	CONTROLLO DI TENUTA VALVOLE GAS (OPTIONAL)	GAS PROVING SYSTEM (OPTIONAL)
microA	MICROAMPEROMETRO	MICROAMMETER

Сертификаты EAC

(EAC Certificate)

Уважаемый клиент!
Фирма «Чиб Унигаз» заявляет, что приобретенная Вами горелка сертифицирована в Вашей стране.
В этой книжице Вы найдёте один экземпляр российских сертификатов
В том случае, если Вам понадобятся другие сертификаты, просим Ва с скачать их или распечатать в формате ПДФ со следующих сайтов:

www.cibunigas.com

Dear customers!
CIB Unigas SPA would like to inform you that the burners are certified in your country. This booklet lists the EAC Certificates. Should you need other Certificates, you can download them directly in PDF format from the following site:

www.cibunigas.com

KG417/046.IT.02.01855 от 05-07-2024 до 04-07-2029

KG417/046.IT.02.01856 от 05-07-2024 до 04-07-2029

KG417/046.IT.02.01857 от 05-07-2024 до 04-07-2029

KG417/046.IT.02.01886 от 10-07-2024 до 09-07-2029

KG417/026.IT.02.09.09630 от 28-08-2023 до 27-08-2028

KG417/026.IT.02.09.09627 от 28-08-2023 до 27-08-2028

ЕВРАЗИЙСКИЙ ЭКОНОМИЧЕСКИЙ СОЮЗ

СЕРТИФИКАТ СООТВЕТСТВИЯ

ЕАС

№ ЕАЭС KG417/046.IT.02.01855

Серия KG **№** 0153570

ОРГАН ПО СЕРТИФИКАЦИИ ОС «Центр сертификации «Мурас» № KG417/КЦА.ОСП.046 от 25 апреля 2023 выдан Кыргызским Центром Аккредитации при МЭ КР; Место нахождения: Кыргызская Республика, город Бишкек, 7-й микрорайон, д. 53/2, кв. 9; Место осуществления деятельности: город Бишкек, ул. Раззакова, 19; тел: +996312975163; электронная почта: info.cc-muras@mail.ru

ЗАЯВИТЕЛЬ Товарищество с ограниченной ответственностью "Q ENERGY ENGINEERING (КЬЮ ЭНЕРДЖИ ИНЖИНИРИНГ)", БИН 200340022449 Место нахождения: РЕСПУБЛИКА КАЗАХСТАН, 050059, город Алматы, Бостандыкский район, Проспект Аль-Фараби, дом 15, н.п. 18в ; тел: +77273115140; электронная почта: info@q-energy.kz

ИЗГОТОВИТЕЛЬ "CIB UNIGAS S.p.A."; Место нахождения: ИТАЛИЯ, Via Galvani, 9, 35011 Campodarsego (PD), ., Место осуществления деятельности:КИТАЙ, Unit 2206, Tower 2 of No.3 Hua Qiang Road, Tian He District, Guangzhou 510623

ПРОДУКЦИЯ Горелки блочные промышленные комбинированные, торговой марки CIB Unigas S.p.A. модели: согласно приложения на 2 листе(ах) , серийный выпуск .

КОД ТН ВЭД ЕАЭС согласно приложения на 2 листе(ах)

СООТВЕТСТВУЕТ ТРЕБОВАНИЯМ Технического регламента Таможенного союза ТР ТС 016/2011 "О безопасности аппаратов, работающих на газообразном топливе".

СЕРТИФИКАТ ВЫДАН НА ОСНОВАНИИ Протокола испытаний № 75-ПЛС от 05.07.2024; Испытательный центр ТОО «ГЗО «Алматы-Стандарт», аттестат аккредитации № KZ.T.02.E0367 от 30.06.2021 г. Акта анализа состояния производства №1374-СС/06-2024 от 02.06.2024 г. выданного органом по сертификации продукции ОсОО «Центр Сертификации «Мурас», аттестат аккредитации № KG 417/КЦА.ОСП.046. Схема сертификации: 1С

ДОПОЛНИТЕЛЬНАЯ ИНФОРМАЦИЯ Разделы 4-6 ГОСТ 21204-9. Действие сертификата соответствия распространяется на продукцию, произведенную с даты изготовления испытанного образца 01.2022. Заявитель является уполномоченным лицом изготовителя на основании договора №2/KZ 2023 от 11.05.2023 г.

СРОК ДЕЙСТВИЯ С 05.07.2024 **ПО** 04.07.2029 **ВКЛЮЧИТЕЛЬНО**

Руководитель (уполномоченное лицо) органа по сертификации (подпись) *Бекенов Байаке Олжобаевич* (Ф.И.О.)

Эксперт (эксперт-аудитор) (эксперты (эксперты-аудиторы)) (подпись) *Сариева Алтынай Куттубековна* (Ф.И.О.)

М.П.

ЕВРАЗИЙСКИЙ ЭКОНОМИЧЕСКИЙ СОЮЗ

1

ЕАС

ПРИЛОЖЕНИЕ

к сертификату соответствия № ЕАЭС KG417/046.IT.02.01855
Перечень конкретной продукции ,
на которую распространяется действие сертификата соответствия
Серия KG **№** 0116754

№	Код ТН ВЭД ЕАЭС	Наименование и обозначение продукции, ее изготовитель	Кол-во, единица измерения
		Горелки блочные промышленные комбинированные, торговой марки CIB Unigas S.p.A. модели:	
1	8416202000	HTP90, HTP91, HTP92, HTP93, HTP512, HTP515, HTP520, HTP525, HTP1025, HTP1030, HTP1050, HTP1080, HTP2000, HTP2500, HTP90A, HTP91A, HTP92A, HTP93A, HTP512A, HTP515A, HTP520A, HTP525A, HTP1025A, HTP1030A, HTP1050A, HTP1080A, HTLX83, HTLX115, HTLX225, HTLX92R, HTLX92.1, HTLX512R, HTLX512.1, HTLX515.1, HTLX520.1, HTLX525.1, HTLX1030R, HTLX1030.1, HTLX2020, HTLX2030, HTLX2040, HTLX3000	
2	8416202000	URB5, URB10, URB15, URB20, URB25, URB30, URB32, URB35, URB40, URB45, URB50, URB60, URB70, URB80, URB-SH5, URB-SH10, URB-SH15, URB-SH20, URB-SH25, URB-SH30, URB-SH32, URB-SH35, URB-SH40, URB-SH45, URB-SH50, URB-SH60, URB-SH70, URB-SH80	
3	8416202000	KTP90, KTP91, KTP92, KTP93, KTP510, KTP512, KTP515, KTP520, KTP525, KTP1025, KTP1030, KTP1050, KTP1080, KTPBY90, KTPBY91, KTPBY92, KTPBY93, KTPBY510, KTPBY512, KTPBY515, KTPBY520, KTPBY525, KTPBY1025, KTPBY1030, KTPBY1050, KTPBY1080, KTPBY2000, KTPBY2500	
4	8416202000	HS5, HS10, HS18, HP20, HP30, HP45, HP60, HP65, HP72, HP91, HP92, HP93, HP512, HP515, HP520, HP525, HP1025, HP1030, HP1040, A23A, A35A, HP73A, HP90A, HP91A, HP92A, HP93A, HP512A, HP515A, HP520A, HP525A, HP1025A, HP1030A, HP1040A, HR73A, HR90A, HR91A, HR92A, HR93A, HR512A, HR515A, HR520A, HR525A, HR1025A, HR1030A HR1040A, HR73, HR90, HR91, HR92, HR93, HR512, HR515, HR520, HR525, HR1025, HR1030, HR1040	
5	8416202000	B57A, B88A, B88P, B97A, B120A, B120P, B155A, B155P, B205P, B153Y, B205Y	

Руководитель (уполномоченное лицо) органа по сертификации (подпись) *Бекенов Байаке Олжобаевич* (Ф.И.О.)

Эксперт (эксперт-аудитор) (эксперты (эксперты-аудиторы)) (подпись) *Сариева Алтынай Куттубековна* (Ф.И.О.)

М.П.

ПРИЛОЖЕНИЕ

к сертификату соответствия № ЕАЭС KG417/046.IT.02.01855
Перечень конкретной продукции ,
на которую распространяется действие сертификата соответствия

Серия KG № 0116755

№	Код ТН ВЭД ЕАЭС	Наименование и обозначение продукции, ее изготовитель	Кол-во, единица измерения
		Горелки блочные промышленные комбинированные, торговой марки CIB Unigas S.p.A. модели:	
6	8416202000	KP60, KP65, KP72, KP73, KP90, KP91, KP92, KP93, KP512, KP515, KP520, KP525, KP1025, KP1030, KP1040, KR73, KR90, KR91, KR92, KR93, KR512, KR515, KR520, KR525, KR1025, KR1030, KR1040, KPBY65, KPBY70, KPBY72, KPBY73, KPBY90, KPBY91, KPBY92, KPBY93, KPBY512, KPBY515, KPBY520, KPBY525, KPBY1025, KPBY1030, KPBY1040, KRBY65, KRBY70, KRBY72, KRBY73, KRBY90, KRBY91, KRBY92, KRBY93, KRBY512, KRBY515, KRBY520, KRBY525, KRBY1025, KRBY1030, KRBY1040	
7	8416202000	N870A, Q1300X, Q1520A, Q1520P, Q1520X, Q1520Y, S1600A, S1600P, S1600X, S1600Y, S1700A, S1700P, S1700X, S1700Y, S1900A, S1900P, S1900X, S1900Y	

Руководитель (уполномоченное лицо) органа по сертификации _____ *Бекенов Байаке Олжобаевич*
(подпись) (Ф.И.О.)

М.П.

Эксперт (эксперт-аудитор) (эксперты (эксперты-аудиторы)) _____ *Сарнева Алтынай Куттубековна*
(подпись) (Ф.И.О.)

ТИРКЕМЕ

№ ЕАЭС KG417/046.IT.02.01855 шайкештик сертификатына
Шайкештик сертификатын колдонууга таралган
продукциянын айкын тизмеси

Сериясы KG № 0116754

№	ЕАЭБ ТЭИ ТН Код	Продукциянын аталышы жана белгилениши, аны жасап чыгаруучу	Саны (чен. бирдиги)
		CIB Unigas S.p.A соода маркасынын өнөр жайлык курама блок оттуктары, моделдер:	
1	8416202000	HTP90, HTP91, HTP92, HTP93, HTP512, HTP515, HTP520, HTP525, HTP1025, HTP1030, HTP1050, HTP1080, HTP2000, HTP2500, HTP90A, HTP91A, HTP92A, HTP93A, HTP512A, HTP515A, HTP520A, HTP525A, HTP1025A, HTP1030A, HTP1050A, HTP1080A, HTLX83, HTLX115, HTLX225, HTLX92R, HTLX92.1, HTLX512R, HTLX512.1, HTLX515.1, HTLX520.1, HTLX525.1, HTLX1030R, HTLX1030.1, HTLX2020, HTLX2030, HTLX2040, HTLX3000	
2	8416202000	URB5, URB10, URB15, URB20, URB25, URB30, URB32, URB35, URB40, URB45, URB50, URB60, URB70, URB80, URB-SH5, URB-SH10, URB-SH15, URB-SH20, URB-SH25, URB-SH30, URB-SH32, URB-SH35, URB-SH40, URB-SH45, URB-SH50, URB-SH60, URB-SH70, URB-SH80	
3	8416202000	KTP90, KTP91, KTP92, KTP93, KTP510, KTP512, KTP515, KTP520, KTP525, KTP1025, KTP1030, KTP1050, KTP1080, KTPBY90, KTPBY91, KTPBY92, KTPBY93, KTPBY510, KTPBY512, KTPBY515, KTPBY520, KTPBY525, KTPBY1025, KTPBY1030, KTPBY1050, KTPBY1080, KTPBY2000, KTPBY2500	
4	8416202000	HS5, HS10, HS18, HP20, HP30, HP45, HP60, HP65, HP72, HP91, HP92, HP93, HP512, HP515, HP520, HP525, HP1025, HP1030, HP1040, A23A, A35A, HP73A, HP90A, HP91A, HP92A, HP93A, HP512A, HP515A, HP520A, HP525A, HP1025A, HP1030A, HP1040A, HR73A, HR90A, HR91A, HR92A, HR93A, HR512A, HR515A, HR520A, HR525A, HR1025A, HR1030A HR1040A, HR73, HR90, HR91, HR92, HR93, HR512, HR515, HR520, HR525, HR1025, HR1030, HR1040	
5	8416202000	B57A, B88A, B88P, B97A, B120A, B120P, B155A, B155P, B205P, B153Y, B205Y	

Сертификациялоо боюнча органдын жетекчиси (ыйгарым укуктуу адам) _____ *Бекенов Байаке Олжобаевич*
(кол тамгасы) (фамилиясы, аты-жөнү)

М.О.

Эксперт (эксперт-аудитор) (эксперттер (экспертер-аудиторлор)) _____ *Сарнева Алтынай Куттубековна*
(кол тамгасы) (фамилиясы, аты-жөнү)

ЕВРАЗИЯ ЭКОНОМИКАЛЫК БИРЛИГИ

2

ТИРКЕМЕ

№ ЕАЭС KG417/046.IT.02.01855 шайкештик сертификатына
Шайкештик сертификатын колдонууга таралган
продукциянын айкын тизмеси

Сериясы KG № 0116755

№	ЕАЭБ ТЭИ ТН Код	Продукциянын аталышы жана белгилениши, аны жасап чыгаруучу	Саны (чен. бирдиги)
		CIB Unigas S.p.A соода маркасынын өнөр жайлык курама блок оттуктары, моделдер:	
6	8416202000	KP60, KP65, KP72, KP73, KP90, KP91, KP92, KP93, KP512, KP515, KP520, KP525, KP1025, KP1030, KP1040, KR73, KR90, KR91, KR92, KR93, KR512, KR515, KR520, KR525, KR1025, KR1030, KR1040, KPBY65, KPBY70, KPBY72, KPBY73, KPBY90, KPBY91, KPBY92, KPBY93, KPBY512, KPBY515, KPBY520, KPBY525, KPBY1025, KPBY1030, KPBY1040, KRBY65, KRBY70, KRBY72, KRBY73, KRBY90, KRBY91, KRBY92, KRBY93, KRBY512, KRBY515, KRBY520, KRBY525, KRBY1025, KRBY1030, KRBY1040	
7	8416202000	N870A, Q1300X, Q1520A, Q1520P, Q1520X, Q1520Y, S1600A, S1600P, S1600X, S1600Y, S1700A, S1700P, S1700X, S1700Y, S1900A, S1900P, S1900X, S1900Y	

Сертификациялоо боюнча органдын жетекчиси (ыйгарым укуктуу адам) _____ Бекенов Байаке Олжобаевич
(кол тамгасы) (фамилиясы, аты-жөнү)

Эксперт (эксперт-аудитор) (эксперттер (экспертер-аудиторлор)) _____ Сариева Алтынай Куттубековна
(кол тамгасы) (фамилиясы, аты-жөнү)

M.O. Muras Certification Center

ЕВРАЗИЯ ЭКОНОМИКАЛЫК БИРЛИГИ

ШАЙКЕШТИК СЕРТИФИКАТЫ

№ ЕАЭС KG417/046.IT.02.01855

Сериясы KG № 0153570

СЕРТИФИКАЦИЯЛОО БОЮНЧА ОРГАН "Мурас" Сертификация борбору" жоопкерчилиги чектелген коому Экономика министирлигине караштуу Кыргыз Аккредиттөө Борбору тарабынан 2.5 чын куран 2023ж. берилген № KG417/КЦА.ОСП.046 аккредиттөө аттестаты. Турган жери: Кыргыз Республикасы, Бишкек шаары, 7-и микрорайону, 53/2, 9; Дареги: Бишкек шаары, Раззаков к., 19; тел: +996312975163; электрондук почтасы: info.cc-muras@mail.ru;

БИЛДИРҮҮЧҮ Жоопкерчилиги чектелген шериктештик "Q ENERGY ENGINEERING (Q ENERGY ENGINEERING)", БИН 200340022449 Турган жери: Казахстан Республикасы, 050059, Алматы шаары, Бостандык району, Аль-Фараби проспектиси, 15-үй, н.п. 18в; тел: +77273115140; электрондук почтасы: info@q-energy.kz

ӨНДҮРҮҮЧҮ "CIB UNIGAS S.p.A.": Турган жери: Италия, Via Galvani, 9, 35011 Campodarsego (PD), ; Дареги: Кытай, Unit 2206, Tower 2 of No.3 Hua Qiang Road, Tian He District, Guangzhou 510623

ПРОДУКЦИЯ CIB Unigas S.p.A соода маркасынын өнөр жайлык курама блок оттуктары, моделдер: 2 барак тиркемеге ылайык , сериялык чыгаруу .

ЕАЭБ ТЭИ ТН КОД 2 барак тиркемеге ылайык

ТАЛАПТАРГА ЫЛАЙЫК . Бажы биримдигинин Техникалык регламенти ББ ТР 016/2011 "Газ түрүндөгү отун менен иштеген түзүлүштөрдүн коопсуздугу жөнүндө".

СЕРТИФИКАТ ТӨМӨНКҮЛӨРДҮН НЕГИЗИНДЕ БЕРИЛДИ Сыноо протоколу № 75-НЛС 05.07.2024 ж. Сыноо борбору ЖЧШ «ГЗО «Алматы-Стандарт», Аккредиттөө аттестаты № KZ.T.02.E0367; Өндүрүштү талдоо боюнча акт №1374-СС/06-2024 от 02.06.2024ж., продукцияларды сертификациялоо органы ЖЧК «Мурас» сертификациялоо борбору» тарабынан берилген, аккредиттөө аттестаты № KG 417/КЦА.ОСП.046 Сертификациянын схемасы: 1С

КОШУМЧА МААЛЫМАТ .: Бөлүмдөр 4-6 МАМСТ 21204-9 , Шарттары жана жарактуулук мөөнөтү, кызмат мөөнөтү буюмга тиркелген эксплуатациялык документтерде көрсөтүлгөн. Шайкештик сертификаты сыналган үлгү өндүрүлгөн күндөн тартып (01.2022) өндүрүлгөн продукцияга тиешелүү. Өтүнмө ээси 11.05.2023 -ж. № 2/KZ 2023 келишиминин негизинде өндүрүүчүнүн ыйгарым укуктуу адамы болуп санадат

ЖАРАКТУУЛУК МӨӨНӨТҮ 05.07.2024 башталып 04.07.2029 ж. чейин

Сертификациялоо боюнча органдын жетекчиси (ыйгарым укуктуу адам) _____ Бекенов Байаке Олжобаевич
(кол тамгасы) (фамилиясы, аты-жөнү)

Эксперт (эксперт-аудитор) (эксперттер (экспертер-аудиторлор)) _____ Сариева Алтынай Куттубековна
(кол тамгасы) (фамилиясы, аты-жөнү)

M.O. Muras Certification Center

ЕВРАЗИЙСКИЙ ЭКОНОМИЧЕСКИЙ СОЮЗ

СЕРТИФИКАТ СООТВЕТСТВИЯ

ЕАС

№ ЕАЭС KG417/046.IT.02.01856.

Серия KG № 0153571

ОРГАН ПО СЕРТИФИКАЦИИ ОС «Центр сертификации «Мурас» № KG417/КЦА.ОСП.046 от 25 апреля 2023 выдан Кыргызским Центром Аккредитации при МЭ КР; Место нахождения: Кыргызская Республика, город Бишкек, 7-й микрорайон, д. 53/2, кв. 9; Место осуществления деятельности: город Бишкек, ул. Раззакова, 19; тел: +996312975163; электронная почта: info.cc-muras@mail.ru

ЗАЯВИТЕЛЬ Товарищество с ограниченной ответственностью "Q ENERGY ENGINEERING (КЬЮ ЭНЕРДЖИ ИНЖИНИРИНГ)", БИН 200340022449, ИНН 200340022449 Место нахождения: РЕСПУБЛИКА КАЗАХСТАН, 050059, город Алматы, Бостандыкский район, Проспект Аль-Фараби, дом 15, н.п. 18в ; тел: +77273115140; электронная почта: info@q-energy.kz

ИЗГОТОВИТЕЛЬ "CIB UNIGAS S.p.A."; Место нахождения: ИТАЛИЯ, Via Galvani, 9, 35011 Campodarsego (PD), Место осуществления деятельности: КИТАЙ, Unit 2206, Tower 2 of No.3 Hua Qiang Road, Tian He District, Guangzhou 510623,

ПРОДУКЦИЯ Горелки блочные газовые промышленные, торговой марки CIB Unigas S.p.A. модели: согласно приложения на 1 листе(ах) , серийный выпуск .

КОД ТН ВЭД ЕАЭС согласно приложения на 1 листе(ах)

СООТВЕТСТВУЕТ ТРЕБОВАНИЯМ Технического регламента Таможенного союза ТР ТС 016/2011 "О безопасности аппаратов, работающих на газообразном топливе"

СЕРТИФИКАТ ВЫДАН НА ОСНОВАНИИ Протокол испытаний № 76-ПЛС от 05.07.2024; Испытательный центр ТОО «ГЗО «Алматы-Стандарт», аттестат аккредитации № KZ.T.02.E0367 . Акта анализа состояния производства №1373-СС 06-2024 от 02.06.2024 г., выданного органом по сертификации продукции ОсОО «Центр Сертификации «Мурас», аттестат аккредитации № KG 417/КЦА.ОСП.046. Схема сертификации: 1С

ДОПОЛНИТЕЛЬНАЯ ИНФОРМАЦИЯ Разделы 4-6 ГОСТ 21204-9. Действие сертификата соответствия распространяется на продукцию, произведенную с даты изготовления испытанного образца (01.2022). Заявитель является уполномоченным лицом изготовителя на основании договора №2/KZ/2023 от 11.05.2023 г.

СРОК ДЕЙСТВИЯ С 05.07.2024 ПО 04.07.2029 ВКЛЮЧИТЕЛЬНО

Руководитель (уполномоченное лицо) органа по сертификации **М.П.** *Бекенов Байаке Олжобаевич* (Ф.И.О.)

Эксперт (эксперт-аудитор) (эксперты (эксперты-аудиторы)) *Муратбекова Гульжамал Муратбековна* (Ф.И.О.)

ЕВРАЗИЙСКИЙ ЭКОНОМИЧЕСКИЙ СОЮЗ

ЕАС

ПРИЛОЖЕНИЕ

к сертификату соответствия № ЕАЭС KG417/046.IT.02.01856.
Перечень конкретной продукции ,
на которую распространяется действие сертификата соответствия

Серия KG № 0116756

№	Код ТН ВЭД ЕАЭС	Наименование и обозначение продукции, ее изготовитель	Кол-во, единица измерения
		Горелки блочные газовые промышленные, торговой марки CIB Unigas S.p.A. модели:	
1	8416208000	TP90, TP91, TP92, TP93, TP512, TP515, TP520, TP525, TP1030, TP1050, TP1080, TP90A, TP91A, TP92A, TP93A, TP512A, TP515A, TP520A, TP525A, TP1030A, TP1050A, TP1080A	
2	8416208000	URB5, URB10, URB15, URB20, URB25, URB30, URB32, URB35, URB40, URB45, URB5O, URB60, URB70, URB80, URB-SH5, URB-SH10, URB-SH15, URB-SH20, URB-SH25, URB-SH30, URB-SH32, URB-SH35, URB-SH40, URB-SH45, URB-SH50, URB-SH60, URB-SH70, URB-SH80	
3	8416208000	TLX83, TLX115, TLX225, TLX92R, TLX92.1, TLX512R, TLX512.1, TLX515.1, TLX520.1, TLX525.1, TLX1030R, TLX1030.1, TLX2020, TLX2030, TLX2040, TLX3000	

Руководитель (уполномоченное лицо) органа по сертификации **М.П.** *Бекенов Байаке Олжобаевич* (Ф.И.О.)

Эксперт (эксперт-аудитор) (эксперты (эксперты-аудиторы)) *Муратбекова Гульжамал Муратбековна* (Ф.И.О.)

ЕВРАЗИЯ ЭКОНОМИКАЛЫК БИРЛИГИ

ШАЙКЕШТИК СЕРТИФИКАТЫ

ЕАС

№ ЕАЭС KG417/046.IT.02.01856.

Сериясы KG **№** 0153571

СЕРТИФИКАЦИЯЛОО БОЮНЧА ОРГАН "Мурас" Сертификация борбору" жоопкерчилиги чектелген коому Экономика министирлигине караштуу Кыргыз Аккредиттөө Борбору тарабынан 2.5 чын куран 2023ж. берилген № KG417/КЦА.ОСП.046 аккредиттөө аттестаты. Турган жери: Кыргыз Республикасы, Бишкек шаары, 7-и микрорайону, 53/2, 9; Дареги: Бишкек шаары, Раззаков к., 19; тел: +996312975163; электрондук почтасы: info.cc-muras@mail.ru;

БИЛДИРҮҮЧҮ Жоопкерчилиги чектелген шериктештик "Q ENERGY ENGINEERING (Q ENERGY ENGINEERING)", БИН 200340022449, ИНН 200340022449 Турган жери: Казахстан Республикасы, 050059, Алматы шаары, Бостандык району, Аль-Фараби проспектиси, 15-үй, н.п. 18в; тел: +77273115140; электрондук почтасы: info@q-energy.kz

ӨНДҮРҮҮЧҮ "CIB UNIGAS S.p.A."; Турган жери: Италия, Via Galvani, 9, 35011 Campodarsego (PD), Дареги: Кытай, Unit 2206, Tower 2 of No.3 Hua Qiang Road, Tian He District, Guangzhou 510623,

ПРОДУКЦИЯ CIB Unigas S.p.A соода маркасындагы өнөр жай блогунун газ күйгүчтөрү, моделдери: 1 барак тиркемеге ылайык , сериялык чыгаруу .

ЕАЭБ ТЭИ ТН КОД 1 барак тиркемеге ылайык

ТАЛАПТАРГА ЫЛАЙЫК Бажы биримдигинин Техникалык регламенти ББ ТР 016/2011 "Газ түрүндөгү отун менен иштеген түзүлүштөрдүн коопсуздугу жөнүндө"

СЕРТИФИКАТ ТӨМӨНКҮЛӨРДҮН НЕГИЗИНДЕ БЕРИЛДИ Сыноо протоколу №76-ПЛС 05.07.2024ж. Сыноо борбору ЖЧШ «ГЗО «Алматы-Стандарт». Аккредиттөө аттестаты № KZ.T.02.E0367; Өндүрүштү талдоо боюнча №1373-СС/06-2024 02.06.2024ж., продукцияларды сертификациялоо органы ЖЧК «Мурас» сертификациялоо борбору» тарабынан берилген, аккредиттөө аттестаты № KG 417/КЦА.ОСП.046 Сертификациянын схемасы: 1С

КОШУМЧА МААЛЫМАТ .: Бөлүмдөр 4-6 МАМСТ 21204-9 . Шарттары жана жарактуулук мөөнөтү, кызмат мөөнөтү буюмга тиркелген эксплуатациялык документтерде көрсөтүлгөн. Шайкештик сертификаты сыналган үлгү өндүрүлгөн күндөн тартып (12.2023) өндүрүлгөн продукцияга тиешелүү. Өтүнмө ээси 11.05.2023 -ж. № 2/KZ 2023 келишиминин негизинде өндүрүүчүнүн ыйгарым укуктуу адамы болуп саналат

ЖАРАКТУУЛУК МӨӨНӨТҮ 05.07.2024 **башталп** 04.07.2029 **ж. чейин**

Сертификациялоо боюнча органдын жетекчиси (ыйгарым укуктуу адам) **М.О.** *Бекенов Байаке Олжобаевич*
(фамилиясы, аты-жөнү)

Эксперт (эксперт-аудитор) (эксперттер (экспертер-аудиторлор)) *Муратбекова Гульжамал Муратбековна*
(фамилиясы, аты-жөнү)

ЕВРАЗИЙСКИЙ ЭКОНОМИЧЕСКИЙ СОЮЗ

ЕАС

ПРИЛОЖЕНИЕ

к сертификату соответствия № ЕАЭС KG417/046.IT.02.01856.
Перечень конкретной продукции ,
на которую распространяется действие сертификата соответствия

Серия KG **№** 0116756

№	Код ТН ВЭД ЕАЭС	Наименование и обозначение продукции, ее изготовитель	Кол-во, единица измерения
		Горелки блочные газовые промышленные, торговой марки CIB Unigas S.p.A, модели:	
1	8416208000	TP90, TP91, TP92, TP93, TP512, TP515, TP520, TP525, TP1030, TP1050, TP1080, TP90A, TP91A, TP92A, TP93A, TP512A, TP515A, TP520A, TP525A, TP1030A, TP1050A, TP1080A	
2	8416208000	URB5, URB10, URB15, URB20, URB25, URB30, URB32, URB35, URB40, URB45, URB5O, URB60, URB70, URB80, URB-SH5, URB-SH10, URB-SH15, URB-SH20, URB-SH25, URB-SH30, URB-SH32, URB-SH35, URB-SH40, URB-SH45, URB-SH50, URB-SH60, URB-SH70, URB-SH80	
3	8416208000	TLX83, TLX115, TLX225, TLX92R, TLX92.1, TLX512R, TLX512.1, TLX515.1, TLX520.1, TLX525.1, TLX1030R, TLX1030.1, TLX2020, TLX2030, TLX2040, TLX3000	

Руководитель (уполномоченное лицо) органа по сертификации **М.П.** *Бекенов Байаке Олжобаевич*
(подпись) (Ф.И.О.)

Эксперт (эксперт-аудитор) (эксперты (эксперты-аудиторы)) *Муратбекова Гульжамал Муратбековна*
(подпись) (Ф.И.О.)

ЕВРАЗИЙСКИЙ ЭКОНОМИЧЕСКИЙ СОЮЗ

СЕРТИФИКАТ СООТВЕТСТВИЯ

ЕАС

№ ЕАЭС KG417/046.IT.02.01857

Серия KG **№ 0153572**

ОРГАН ПО СЕРТИФИКАЦИИ ОС «Центр сертификации «Мурас» № KG417/КПА ОСП 046 от 25 апреля 2023 выдан Кыргызским Центром Аккредитации при МЭ КР; Место нахождения: Кыргызская Республика, город Бишкек, 7-й микрорайон, д. 53/2, кв. 9; Место осуществления деятельности: город Бишкек, ул. Раззакова, 19; тел: +996312975163; электронная почта: info cc-muras@mail.ru

ЗАЯВИТЕЛЬ Товарищество с ограниченной ответственностью "Q ENERGY ENGINEERING (КЬЮ ЭНЕРДЖИ ИНЖИНИРИНГ)", БИН 200340022449 Место нахождения: РЕСПУБЛИКА КАЗАХСТАН, 050059, город Алматы, Бостандыкский район, Проспект Аль-Фараби, дом 15, н.п. 18в ; тел: +77273115140; электронная почта: info@q-energy.kz

ИЗГОТОВИТЕЛЬ "CIB UNIGAS S.p.A.": Место нахождения: ИТАЛИЯ Via Galvani, 9, 35011 Campodarsego (PD) ; Место осуществления деятельности: КИТАЙ Unit 2206, Tower 2 of No.3 Hua Qiang Road, Tian He District, Guangzhou 510623

ПРОДУКЦИЯ Горелки блочные газовые промышленные, торговой марки CIB Unigas S.p.A. модели согласно приложения на 1 листе(ах) , серийный выпуск

КОД ТН ВЭД ЕАЭС согласно приложения на 1 листе(ах)

СООТВЕТСТВУЕТ ТРЕБОВАНИЯМ Технического регламента Таможенного союза ТР ТС 016/2011 "О безопасности аппаратов, работающих на газообразном топливе"

СЕРТИФИКАТ ВЫДАН НА ОСНОВАНИИ Протокола испытаний № 77-ПЛС от 05.07.2024; Испытательный центр ТОО «ГЗО «Алматы-Стандарт», аттестат аккредитации № KZ.T.02.E0367 от 30.06.2021 г. Акта анализа состояния производства №1375-СС/06-2024 от 02.06.2024 г., выданного органом по сертификации продукции ОсОО «Центр Сертификации «Мурас», аттестат аккредитации № KG 417/КПА.ОСП.046. Схема сертификации: 1С

ДОПОЛНИТЕЛЬНАЯ ИНФОРМАЦИЯ Разделы 4-6 ГОСТ 21204-9 Действие сертификата соответствия распространяется на продукцию, произведенную с даты изготовления испытанного образца 01.2022. Заявитель является уполномоченным лицом изготовителя на основании договора №2/KZ 2023 от 11.05.2023 г.

СРОК ДЕЙСТВИЯ С 05.07.2024 ПО 04.07.2029 ВКЛЮЧИТЕЛЬНО

Руководитель (уполномоченное лицо) органа по сертификации (подпись) *Бекенов Байаке Олжобаевич* (Ф.И.О.)

М.П.

Эксперт (эксперт-аудитор) (эксперты (эксперты-аудиторы)) (подпись) *Сариева Алтынай Куттубековна* (Ф.И.О.)

ЕВРАЗИЙСКИЙ ЭКОНОМИЧЕСКИЙ СОЮЗ

ЕАС

ПРИЛОЖЕНИЕ

к сертификату соответствия № ЕАЭС KG417/046.IT.02.01857

Перечень конкретной продукции

на которую распространяется действие сертификата соответствия

Серия KG **№ 0116757**

№	Код ТН ВЭД ЕАЭС	Наименование и обозначение продукции, ее изготовитель	Кол-во, единица измерения
		Горелки блочные газовые промышленные, торговой марки CIB Unigas S.p.A. модели	
1	8416201000	S3, S5, S10, S18, P20, P30, P45, P50, P60, P61, P65, P71, P72, P73, P90, P91, P92, P93, P510, P512, P515, P520, P525, P1025, P1030, P1040, A23A, A35A, B57A, B80A, B97A, B120A, B165A, P73A, P91A, P92A, P93A, P512A, P515A, P520A, P525A, P1025A, P1030A, P1040A	
2	8416201000	NG35, NG70, NG90, NG120, NG140, NG200, NG280, NG350, NG400, NG550, NGX35, NGX65, NGX70, NGX90, NGX120, NGX125, NGX140, NGX145, NGX170, NGX200, NGX280, NGX300, NGX350, NGX400, NGX550	
3	8416201000	LG35, LG70, LG90, LG120, LG140, LG200, LG280, LG350, LG400, LG550, LX5, LX10, LX18, LX20, LX30, LX45, LX60, LX65, LX72, LX73	
4	8416201000	R73A, R90A, R91A, R92A, R93A, R510A, R512A, R515A, R520A, R525A, R1025A, R1030A, R1040A, R73, R90, R91, R92, R93, R510, R512, R515, R520, R525, R1025, R1030, R1040	
5	8416201000	N870A, Q1300X, Q1520A, Q1520X, S1600A, S1600X, S1700A, S1700X, S1900A, S1900X	

Руководитель (уполномоченное лицо) органа по сертификации (подпись) *Бекенов Байаке Олжобаевич* (Ф.И.О.)

М.П.

Эксперт (эксперт-аудитор) (эксперты (эксперты-аудиторы)) (подпись) *Сариева Алтынай Куттубековна* (Ф.И.О.)

ЕВРАЗИЯ ЭКОНОМИКАЛЫК БИРЛИГИ

ШАЙКЕШТИК СЕРТИФИКАТЫ

ЕАС

№ ЕАЭС KG417/046.IT.02.01857

Сериясы KG **№** 0153572

СЕРТИФИКАЦИЯЛОО БОЮНЧА ОРГАН "Мурас" Сертификация борбору" жоопкерчилиги чектелген коому Экономика министирлигине караштуу Кыргыз Аккредиттөө Борбору тарабынан 2.5 чын куран 2023ж. берилген № KG417/КЦА.ОСП.046 аккредиттөө аттестаты. Турган жери: Кыргыз Республикасы, Бишкек шаары, 7-и микрорайону, 53/2, 9; Дареги: Бишкек шаары, Раззаков к., 19; тел: +996312975163; электрондук почтасы: info.cc-muras@mail.ru;

БИЛДИРҮҮЧҮ Жоопкерчилиги чектелген шериктештик "Q ENERGY ENGINEERING (Q ENERGY ENGINEERING)", БИН 200340022449 Турган жери: Казахстан Республикасы, 050059, Алматы шаары, Бостандык району, Аль-Фараби проспектиси, 15-үй, н.п. 18в; тел: +77273115140; электрондук почтасы: info@q-energy.kz

ӨНДҮРҮҮЧҮ "CIB UNIGAS S.p.A.", Турган жери: Италия, Via Galvani, 9, 35011 Campodarsego (PD), ., Дареги: Кытай, Unit 2206, Tower 2 of No.3 Hua Qiang Road, Tian He District, Guangzhou 510623

ПРОДУКЦИЯ CIB Unigas S.p.A соода маркасыны өнөр жай блогунун газ күйгүчтөрү, моделдер: 1 барак тиркемеге ылайык , сериялык чыгаруу .

ЕАЭБ ТЭИ ТН КОД 1 барак тиркемеге ылайык

ТАЛАПТАРГА ЫЛАЙЫК Бажы биримдигинин Техникалык регламенти ББ ТР 016/2011 "Газ түрүндөгү отун менен иштеген түзүлүштөрдүн коопсуздугу жөнүндө".

СЕРТИФИКАТ ТӨМӨНКҮЛӨРДҮН НЕГИЗИНДЕ БЕРИЛДИ Сыноо протоколу №77-ПЛС 05.07.2024ж. Сыноо борбору ЖЧШ «ГЗО «Алматы-Стандарт». Аккредиттөө аттестаты № KZ.T.02.E0367; Өндүрүштү талдоо боюнча №1375-СС/06-2024 02.06.2024ж., продукцияларды сертификациялоо органы ЖЧК «Мурас» сертификациялоо борбору» тарабынан берилген, аккредиттөө аттестаты № KG 417/КЦА.ОСП.046 Сертификациянын схемасы: 1С

КОШУМЧА МААЛЫМАТ .; Бөлүмдөр 4-6 МАМСТ 21204-9 , Шарттары жана жарактуулук мөөнөтү, кызмат мөөнөтү буюмга тиркелген эксплуатациялык документтерде көрсөтүлгөн. Шайкештик сертификаты сыналган үлгү өндүрүлгөн күндөн тартып (01.2022) өндүрүлгөн продукцияга тиешелүү. Өтүнмө ээси 11.05.2023 -ж. № 2/KZ 2023 келишиминин негизинде өндүрүүчүнүн ыйгарым укуктуу адамы болуп саналат

ЖАРАКТУУЛУК МӨӨНӨТҮ 05.07.2024 **баштап** 04.07.2029 **ж. чейин**

Сертификациялоо боюнча органдын жетекчиси (ыйгарым укуктуу адам) _____ **М.О.** *Бекенов Байаке Олжобаевич*
(кол тамгасы) (фамилиясы, аты-жөнү)

Эксперт (эксперт-аудитор) (эксперттер (экспертер-аудиторлор)) _____ *Сариева Алтынай Куттубековна*
(кол тамгасы) (фамилиясы, аты-жөнү)

ЕВРАЗИЯ ЭКОНОМИКАЛЫК БИРЛИГИ

ЕАС

ТИРКЕМЕ

№ ЕАЭС KG417/046.IT.02.01857 шайкештик сертификатына
Шайкештик сертификатын колдонууга таралган
продукциянын айкын тизмеги

Сериясы KG **№** 0116757

№	ЕАЭБ ТЭИ ТН Код	Продукциянын аталышы жана белгилениши, аны жасап чыгаруучу	Саны (чен. бирдиги)
		CIB Unigas S.p.A соода маркасыны өнөр жай блогунун газ күйгүчтөрү, моделдер:	
1	8416201000	S3, S5, S10, S18, P20, P30, P45, P50, P60, P61, P65, P71, P72, P73, P90, P91, P92, P93, P510, P512, P515, P520, P525, P1025, P1030, P1040, A23A, A35A, B57A, B80A, B97A, B120A, B165A, P73A, P91A, P92A, P93A, P512A, P515A, P520A, P525A, P1025A, P1030A, P1040A	
2	8416201000	NG35, NG70, NG90, NG120, NG140, NG200, NG280, NG350, NG400, NG550, NGX35, NGX65, NGX70, NGX90, NGX120, NGX125, NGX140, NGX145, NGX170, NGX200, NGX280, NGX300, NGX350, NGX400, NGX550	
3	8416201000	LG35, LG70, LG90, LG120, LG140, LG200, LG280, LG350, LG400, LG550, LX5, LX10, LX18, LX20, LX30, LX45, LX60, LX65, LX72, LX73	
4	8416201000	R73A, R90A, R91A, R92A, R93A, R510A, R512A, R515A, R520A, R525A, R1025A, R1030A, R1040A, R73, R90, R91, R92, R93, R510, R512, R515, R520, R525, R1025, R1030, R1040	
5	8416201000	N870A, Q1300X, Q1520A, Q1520X, S1600A, S1600X, S1700A, S1700X, S1900A, S1900X	

Сертификациялоо боюнча органдын жетекчиси (ыйгарым укуктуу адам) _____ **М.О.** *Бекенов Байаке Олжобаевич*
(кол тамгасы) (фамилиясы, аты-жөнү)

Эксперт (эксперт-аудитор) (эксперттер (экспертер-аудиторлор)) _____ *Сариева Алтынай Куттубековна*
(кол тамгасы) (фамилиясы, аты-жөнү)

ЕВРАЗИЙСКИЙ ЭКОНОМИЧЕСКИЙ СОЮЗ

СЕРТИФИКАТ СООТВЕТСТВИЯ

ЕАС

№ ЕАЭС KG417/046.IT.02.01886.

Серия KG **№** 0153601

ОРГАН ПО СЕРТИФИКАЦИИ ОС «Центр сертификации «Мурас» № KG417/КЦА.ОСП.046 от 25 апреля 2023 выдан Кыргызским Центром Аккредитации при МЭ КР; Место нахождения: Кыргызская Республика, город Бишкек, 7-й микрорайон, д. 53/2, кв. 9; Место осуществления деятельности: город Бишкек, ул. Раззакова, 19; тел: +996312975163; электронная почта: info.cc-muras@mail.ru

ЗАЯВИТЕЛЬ Товарищество с ограниченной ответственностью "Q ENERGY ENGINEERING (КЬЮ ЭНЕРДЖИ ИНЖИНИРИНГ)", БИН 200340022449, Место нахождения: РЕСПУБЛИКА КАЗАХСТАН, 050059, город Алматы, Бостандыкский район, Проспект Аль-Фараби, дом 15, н.п. 18в ; тел: +77273115140; электронная почта: info@q-energy.kz

ИЗГОТОВИТЕЛЬ "CIB UNIGAS S.p.A."; Место нахождения: ИТАЛИЯ, Via Galvani, 9, 35011 Campodarsego (PD), Место осуществления деятельности: КИТАЙ, Unit 2206, Tower 2 of No.3 Hua Qiang Road, Tian He District, Guangzhou 510623 .

ПРОДУКЦИЯ Горелки блочные жидкотопливные промышленные, торговой марки CIB Unigas S.p.A. модели: согласно приложения на 2 листе(ах) , серийный выпуск .

КОД ТН ВЭД ЕАЭС согласно приложения на 2 листе(ах)

СООТВЕТСТВУЕТ ТРЕБОВАНИЯМ Технического регламента Таможенного союза ТР ТС 010/2011 "О безопасности машин и оборудования"

СЕРТИФИКАТ ВЫДАН НА ОСНОВАНИИ Протокол испытаний № 2/02.К-162/11 от 14.06.2024; Испытательный центр ТОО «Прикаспийский Центр Сертификации», Аттестат аккредитации № KZ.T.02.0199. Акта анализа состояния производства №1403-СС/05-2024г. от 29.05.2024г., выданного органом по сертификации продукции ОсОО «Центр Сертификации «Мурас», аттестат аккредитации № KG 417/КЦА.ОСП.046. Схема сертификации: 1С

ДОПОЛНИТЕЛЬНАЯ ИНФОРМАЦИЯ ГОСТ 27824-2000. Действие сертификата соответствия распространяется на продукцию, произведенную с даты изготовления испытанного образца (01.2022). Заявитель является уполномоченным лицом изготовителя на основании договора №2/KZ 2023 от 11.05.2023 г.

СРОК ДЕЙСТВИЯ С 10.07.2024 **ПО** 09.07.2029 **ВКЛЮЧИТЕЛЬНО**

Руководитель (уполномоченное лицо) органа по сертификации **М.П.** *Бекенов Байаке Олжобаевич*
(подпись) (Ф.И.О.)

Эксперт (эксперт-аудитор) (эксперты (эксперты-аудиторы)) *Муратбекова Гульжамал Муратбековна*
(подпись) (Ф.И.О.)

ЕВРАЗИЙСКИЙ ЭКОНОМИЧЕСКИЙ СОЮЗ

ЕАС

ПРИЛОЖЕНИЕ

к сертификату соответствия № ЕАЭС KG417/046.IT.02.01886.
Перечень конкретной продукции ,
на которую распространяется действие сертификата соответствия

Серия KG **№** 0116798

№	Код ТН ВЭД ЕАЭС	Наименование и обозначение продукции, ее изготовитель	Кол-во, единица измерения
		Горелки блочные жидкотопливные промышленные, торговой марки CIB Unigas S.p.A. модели:	
1	8416101000	G3, G4, G5, G6, G10, G18, PG25, PG30, PG45, PG60, PG65, PG70, PG81, PG90, PG91, PG92, PG93, PG510, PG512, PG515, PG520, PG525, PG1030, PG1040, A38P, B45P, B70P, B79P, B105P, B190P, RG81, RG90, RG91, RG92, RG93, RG510, RG515, RG520, RG525, RG1030, RG1040,	
2	8416101000	LO35, LO60, LO70, LO90, LO140, LO200, LO260, LO280, LO350, LO400, LO550, LOX35, LOX60, LOX90, LOX140	
3	8416101000	TG90, TG91, TG92, TG93, TG510, TG515, TG520, TG525, TG1025, TG1030, TG1050, TG1080, TG2000, TG2500, TN90, TN91, TN92, TN93, TN510, TN515, TN520, TN525, TN1030, TN1050, TN1080, TN2000, TN2500	
4	8416101000	URB5, URB10, URB15, URB20, URB25, URB30, URB32, URB35, URB40, URB45, URB50, URB60, URB70, URB80, URB-SH5, URB-SH10, URB-SH15, URB-SH20, URB-SH25, URB-SH30, URB-SH32, URB-SH35, URB-SH40, URB-SH45, URB-SH50, URB-SH60, URB-SH70, URB-SH80, URB5, URB10, URB15, URB20, URB25, URB30, URB32, URB35, URB40, URB45, URB50, URB60, URB70, URB80, URB-SH5, URB-SH10, URB-SH15, URB-SH20, URB-SH25, URB-SH30, URB-SH32, URB-SH35, URB-SH40, URB-SH45, URB-SH50,	
5	8416101000	N18, PN30, PN45, PN60, PN65, PN70, PN81, PN90, PN91, PN92, PN93, PN510, PN515, PN520, PN525, PN1030, PN1040, A35P, A38P, B70P, B79P B105P, B190P, RN90, RN91, RN92, RN93, RN510, RN512, RN515, RN520, RN525, RN1030, RN1040,	

Руководитель (уполномоченное лицо) органа по сертификации **М.П.** *Бекенов Байаке Олжобаевич*
(подпись) (Ф.И.О.)

Эксперт (эксперт-аудитор) (эксперты (эксперты-аудиторы)) *Муратбекова Гульжамал Муратбековна*
(подпись) (Ф.И.О.)

ЕВРАЗИЙСКИЙ ЭКОНОМИЧЕСКИЙ СОЮЗ

ПРИЛОЖЕНИЕ

к сертификату соответствия № ЕАЭС KG417/046.IT.02.01886.
Перечень конкретной продукции ,
на которую распространяется действие сертификата соответствия

Серия KG № 0110739

№	Код ТН ВЭД ЕАЭС	Наименование и обозначение продукции, ее изготовитель	Кол-во, единица измерения
		Горелки блочные жидкотопливные промышленные, торговой марки CIB Unigas S.p.A. модели:	
6	8416101000	PBY70, PBY72, PBY73, PBY90, PBY91, PBY92, PBY93, PBY510, PBY515, PBY520, PBY525, PBY1025, PBY1030, PBY1040, RBY70, RBY72, RBY73, RBY90, RBY91, RBY92, RBY93, RBY510, RBY515, RBY520, RBY525, RBY1025, RBY1030, RBY1040, TPBY75, TPBY90, TPBY91, TPBY92, TPBY93, TPBY510, TPBY515, TPBY520, TPBY525, TPBY1025, TPBY1030, TPBY1040, TPBY1050, TPBY1080, TPBY2000, TPBY2500	
7	8416101000	N870P, N870Y, N1060P, N1060Y, N1300P, N1300Y, Q1520P, S1600P, S1700P, S1900P, Q1520P, Q1520Y, S1600P, S1600Y, S1700P, S1700Y, S1900P, S1900Y	

Руководитель (уполномоченное лицо) органа по сертификации _____ М.П. *Бекенов Байаке Олжобаевич*
(подпись) (Ф.И.О.)

Эксперт (эксперт-аудитор) (эксперты (эксперты-аудиторы)) _____ *Муратбекова Гульжамал Муратбековна*
(подпись) (Ф.И.О.)

ЕВРАЗИЯ ЭКОНОМИКАЛЫК БИРЛИГИ

ШАЙКЕШТИК СЕРТИФИКАТЫ

№ ЕАЭС KG417/046.IT.02.01886.

Сериясы KG № 0153601

СЕРТИФИКАЦИЯЛОО БОЮНЧА ОРГАН "Мурас" Сертификация борбору" жоопкерчилиги чектелген коому Экономика министирлигине караштуу Кыргыз Аккредиттөө Борбору тарабынан 2 5 чын куран 2023ж. берилген № KG417/КЦА.ОСП.046 аккредиттөө аттестаты. Турган жери: Кыргыз Республикасы, Бишкек шаары, 7-и микрорайону, 53/2, 9; Дареги: Бишкек шаары, Раззаков к., 19; тел: +996312975163; электрондук почтасы: info.cc-muras@mail.ru;

БИЛДИРҮҮЧҮ Жоопкерчилиги чектелген шериктештик "Q ENERGY ENGINEERING (Q ENERGY ENGINEERING)", БИН 200340022449, Турган жери: Казахстан Республикасы, 050059, Алматы шаары, Бостандык району, Аль-Фараби проспектиси, 15-үй, п.п. 18в; тел: +77273115140; электрондук почтасы: info@q-energy.kz

ӨНДҮРҮҮЧҮ "CIB UNIGAS S.p.A."; Турган жери: Италия, Via Galvani, 9, 35011 Campodarsego (PD); Дареги: Кытай, Unit 2206, Tower 2 of No.3 Hua Qiang Road, Tian He District, Guangzhou 510623,

ПРОДУКЦИЯ Өнөр жай блок-отун күйгүчтөрү: CIB Unigas S.p.A соода маркасы, моделдер: 2 барак тиркемеге ылайык , сериялык чыгаруу .

ЕАЭБ ТЭИ ТН КОД 2 барак тиркемеге ылайык

ТАЛАПТАРГА ЫЛАЙЫК Бажы биримдигинин Техникалык регламенти ББ ТР 010/2011 "Машиналардын жана жабдуулардын коопсуздугу жөнүндө"

СЕРТИФИКАТ ТӨМӨНКҮЛӨРДҮН НЕГИЗИНДЕ БЕРИЛДИ Сыноо протоколу № 2/02.К-162/11, 14.06.2024ж. Сыноо борбору ЖЧШ «Прикаспийский Центр Сертификации». Аккредиттөө аттестаты № KZ.T.02.0199. Өндүрүштү таллоо боюнча №1403-СС/05-2024ж., 29.05.2024ж., продукцияларды сертификациялоо органы ЖЧК «Мурас» сертификациялоо борбору» тарабынан берилген, аккредиттөө аттестаты № KG 417/КЦА.ОСП.046 Сертификациянын схемасы: 1С

КОШУМЧА МААЛЫМАТ .: МАМСТ 27824-2000. Шайкештик сертификаты сыналган үлгү өндүрүлгөн күндөн тартып (01.2022) өндүрүлгөн продукцияга тиешелүү. Өтүнмө ээси 11.05.2023-ж. №2/KZ келишиминин негизинде өндүрүүчүнүн ыйгарым укуктуу адамы болуп саналат.

ЖАРАКТУУЛУК МӨӨНӨТҮ 10.07.2024 **баштап** 09.07.2029 **ж. чейин**

Сертификациялоо боюнча органдын жетекчиси (ыйгарым укуктуу адам) _____ М.О. *Бекенов Байаке Олжобаевич*
(кол тамгасы) (фамилиясы, аты-жөнү)

Эксперт (эксперт-аудитор) (эксперттер (экспертер-аудиторлор)) _____ *Муратбекова Гульжамал Муратбековна*
(кол тамгасы) (фамилиясы, аты-жөнү)

ТИРКЕМЕ

№ ЕАЭС KG417/046.IT.02.01886. шайкештик сертификатына
Шайкештик сертификатын колдонууга таралган
продукциянын айкын тизмеги
Сериясы KG № 0116798

№	ЕАЭБ ТЭИ ТН Код	Продукциянын аталышы жана белгилениши, аны жасап чыгаруучу	Саны (чен. бирдиги)
		Өнөр жай блок-отун күйгүчтөрү: CIB Unigas S.p.A соода маркасы, моделдер:	
1	8416101000	G3, G4, G5, G6, G10, G18, PG25, PG30, PG45, PG60, PG65, PG70, PG81, PG90, PG91, PG92, PG93, PG510, PG512, PG515, PG520, PG525, PG1030, PG1040, A38P, B45P, B70P, B79P, B105P, B190P, RG81, RG90, RG91, RG92, RG93, RG510, RG515, RG520, RG525, RG1030, RG1040.	
2	8416101000	LO35, LO60, LO70, LO90, LO140, LO200, LO260, LO280, LO350, LO400, LO550, LOX35, LOX60, LOX90, LOX140	
3	8416101000	TG90, TG91, TG92, TG93, TG510, TG515, TG520, TG525, TG1025, TG1030, TG1050, TG1080, TG2000, TG2500, TN90, TN91, TN92, TN93, TN510, TN515, TN520, TN525, TN1030, TN1050, TN1080, TN2000, TN2500	
4	8416101000	URB5, URB10, URB15, URB20, URB25, URB30, URB32, URB35, URB40, URB45, URB50, URB60, URB70, URB80, URB-SH5, URB-SH10, URB-SH15, URB-SH20, URB-SH25, URB-SH30, URB-SH32, URB-SH35, URB-SH40, URB-SH45, URB-SH50, URB-SH60, URB-SH70, URB-SH80, URB5, URB10, URB15, URB20, URB25, URB30, URB32, URB35, URB40, URB45, URB50, URB60, URB70, URB80, URB-SH5, URB-SH10, URB-SH15, URB-SH20, URB-SH25, URB-SH30, URB-SH32, URB-SH35, URB-SH40, URB-SH45, URB-SH50,	
5	8416101000	N18, PN30, PN45, PN60, PN65, PN70, PN81, PN90, PN91, PN92, PN93, PN510, PN515, PN520, PN525, PN1030, PN1040, A35P, A38P, B70P, B79P, B105P, B190P, RN90, RN91, RN92, RN93, RN510, RN512, RN515, RN520, RN525, RN1030, RN1040,	

Сертификациялоо боюнча органдын жетекчиси (ыйгарым укуктуу адам) М.О. *Бекенов Байаке Олжобаевич*
(фамилиясы, аты-жөнү)

Эксперт (эксперт-аудитор) (эксперттер (экспертер-аудиторлор)) *Муратбекова Гульжамал Муратбековна*
(фамилиясы, аты-жөнү)

ТИРКЕМЕ

№ ЕАЭС KG417/046.IT.02.01886. шайкештик сертификатына
Шайкештик сертификатын колдонууга таралган
продукциянын айкын тизмеги
Сериясы KG № 0116799

№	ЕАЭБ ТЭИ ТН Код	Продукциянын аталышы жана белгилениши, аны жасап чыгаруучу	Саны (чен. бирдиги)
		Өнөр жай блок-отун күйгүчтөрү: CIB Unigas S.p.A соода маркасы, моделдер	
6	8416101000	PBY70, PBY72, PBY73, PBY90, PBY91, PBY92, PBY93, PBY510, PBY515, PBY520, PBY525, PBY1025, PBY1030, PBY1040, RBY70, RBY72, RBY73, RBY90, RBY91, RBY92, RBY93, RBY510, RBY515, RBY520, RBY525, RBY1025, RBY1030, RBY1040, TPBY75, TPBY90, TPBY91, TPBY92, TPBY93, TPBY510, TPBY515, TPBY520, TPBY525, TPBY1025, TPBY1030, TPBY1040, TPBY1050, TPBY1080, TPBY2000, TPBY2500	
7	8416101000	N870P, N870Y, N1060P, N1060Y, N1300P, N1300Y, Q1520P, S1600P, S1700P, S1900P, Q1520P, Q1520Y, S1600P, S1600Y, S1700P, S1700Y, S1900P, S1900Y	

Сертификациялоо боюнча органдын жетекчиси (ыйгарым укуктуу адам) М.О. *Бекенов Байаке Олжобаевич*
(фамилиясы, аты-жөнү)

Эксперт (эксперт-аудитор) (эксперттер (экспертер-аудиторлор)) *Муратбекова Гульжамал Муратбековна*
(фамилиясы, аты-жөнү)

ЕВРАЗИЙСКИЙ ЭКОНОМИЧЕСКИЙ СОЮЗ

СЕРТИФИКАТ СООТВЕТСТВИЯ

№ ЕАЭС KG417/026.IT.02.09627

Серия KG № 0133097

ОРГАН ПО СЕРТИФИКАЦИИ ОсОО "ЦЕНТР СЕРТИФИКАЦИИ И ИСПЫТАНИЙ", место нахождения: 720000, Кыргызская Республика, г.Бишкек, Ленинский район, проспект Чуй, д.164 А, офис №505; адрес места осуществления деятельности: 720000, Кыргызская Республика, г.Бишкек, Ленинский район, проспект Чуй, д.164 А, офис №505, регистрационный номер аттестата аккредитации № KG 417/КЦА.ОСП.026, дата регистрации 19 мая 2022 года, номер телефона: +996 990 588999, адрес электронной почты: certtestkg@gmail.com

ЗАЯВИТЕЛЬ Товарищество с ограниченной ответственностью "Q ENERGY ENGINEERING (КЬЮ ЭНЕРДЖИ ИНЖИНИРИНГ)". Место нахождения и адрес места осуществления деятельности: 050059, город Алматы, Бостандыкский район, Проспект Аль-Фараби, дом 15, нежилое помещение 18в, Республика Казахстан. БИН: 200340022449. Телефон: +77273115140, адрес электронной почты: info@q-energy.kz.

ИЗГОТОВИТЕЛЬ "CIB UNIGAS S.p.A.". Место нахождения: Via Galvani, 9, 35011 Campodarsego (PD), Италия.
Адрес места осуществления деятельности по изготовлению продукции: CIB UNIGAS ENERGY SCIENCE AND TECHNOLOGY CO.,LTD., Unit 2206, Tower 2 of No.3 Hua Qiang Road, Tian He District, Guangzhou 510623, Китай.

ПРОДУКЦИЯ Горелки газовые блочные автоматические промышленные, модели: G200N, G215N, G225X, G240N, G258A, G270V, G270X, G325X, G330V, G335A, G380A, G400A, мощность: 145-4000 кВт; FG175N, FG195N, FG225X, FG240N, FG258A, FG270X, FG325X, FG335A, FG380A, FG400A, мощность: 145 - 4000 кВт; FH365X, FH424X, FH440A, FH475X, FH550A, FH615A, мощность: 580 – 6150 кВт; FK590X, FK680A, FK685X, мощность: 670 – 6850 кВт; FN880X, FN925X, FN1060X, мощность: 1300-10600 кВт; FRX2050, мощность: 1300 - 12550 кВт; C70N, C83X, C85A, C120A, мощность: 70 - 1200 кВт; E115X, E120N, E150X, E165A, E170V E180X, E205A, мощность: 100 - 2050 кВт; H340V, H365X, H440X, H455A, H455V, H500X, H630A, H685A, мощность: 580 - 6850 кВт; K575V, K590X, K660X, K750X, K750A, K890A, K990A, мощность: 670 - 9900 кВт; N610V, N740V, N800V, N880X, N925X, N1000V, N1060X, N1060A, N1300A, мощность: 780 - 13000 кВт; FC70N, FC83X, FC85A, FC120A, мощность: 70 - 1200 кВт; FE115X, FE120N, FE140A, FE150X, FE175X, FE186A, мощность: 100 - 1860 кВт. Серийный выпуск.

Код ТН ВЭД ЕАЭС 8416 20 100 0

СООТВЕТСТВУЕТ ТРЕБОВАНИЯМ Технического регламента Таможенного союза ТР ТС 016/2011 "О безопасности аппаратов, работающих на газообразном топливе".

СЕРТИФИКАТ ВЫДАН НА ОСНОВАНИИ Протокола испытаний № Н-Т/280823-43 от 28.08.2023 года, выданного ИЦ ТОО «KAZAUTOCERT» аттестат аккредитации регистрационный номер KZ.T.02.2385. Акта анализа состояния производства № 072723-15 от 01.08.2023 года выданного Органом по сертификации продукции ОсОО "Центр Сертификации и Испытаний" (Регистрационный номер аттестата аккредитации органа по сертификации KG 417/КЦА.ОСП.026), проведенного экспертом Рябоконь Александром Николаевичем. Схема сертификации: 1с.

ДОПОЛНИТЕЛЬНАЯ ИНФОРМАЦИЯ ГОСТ EN 676-2016 "Горелки газовые автоматические с принудительной подачей воздуха для горения". Условия и сроки хранения, срок службы указаны в прилагаемой к продукции эксплуатационной документации. Договор уполномоченного лица № 2/KZ 2023 от 11.05.2023 года. Действие сертификата соответствия распространяется на серийно выпускаемую продукцию, изготовленную с даты изготовления отобранных образцов (проб) продукции, прошедших исследования (испытания) и измерения: 05.2023 г.

СРОК ДЕЙСТВИЯ С 28.08.2023 **ПО** 27.08.2028

Руководитель (уполномоченное лицо) органа по сертификации **М.П.** Аксупова Айсулу Мырзабековна
(Подпись) (ФИО)

Эксперт (эксперт-аудитор) (эксперты (эксперты-аудиторы)) Окошев Чынгыз Жороевич
(Подпись) (ФИО)

ЕВРАЗИЙСКИЙ ЭКОНОМИЧЕСКИЙ СОЮЗ

СЕРТИФИКАТ СООТВЕТСТВИЯ

№ ЕАЭС KG417/026.IT.02.09630

Серия KG № 0133100

ОРГАН ПО СЕРТИФИКАЦИИ ОсОО "ЦЕНТР СЕРТИФИКАЦИИ И ИСПЫТАНИЙ", место нахождения: 720000, Кыргызская Республика, г.Бишкек, Ленинский район, проспект Чуй, д.164 А, офис №505; адрес места осуществления деятельности: 720000, Кыргызская Республика, г.Бишкек, Ленинский район, проспект Чуй, д.164 А, офис №505, регистрационный номер аттестата аккредитации № KG 417/КЦА.ОСП.026, дата регистрации 19 мая 2022 года, номер телефона: +996 990 588999, адрес электронной почты: certtestkg@gmail.com

ЗАЯВИТЕЛЬ Товарищество с ограниченной ответственностью "Q ENERGY ENGINEERING (КЬЮ ЭНЕРДЖИ ИНЖИНИРИНГ)". Место нахождения и адрес места осуществления деятельности: 050059, город Алматы, Бостандыкский район, Проспект Аль-Фараби, дом 15, нежилое помещение 18в, Республика Казахстан. БИН: 200340022449. Телефон: +77273115140, адрес электронной почты: info@q-energy.kz.

ИЗГОТОВИТЕЛЬ "CIB UNIGAS S.p.A.". Место нахождения: Via Galvani, 9, 35011 Campodarsego (PD), Италия.
Адреса мест осуществления деятельности по изготовлению продукции: CIB UNIGAS ENERGY SCIENCE AND TECHNOLOGY CO.,LTD., Unit 2206, Tower 2 of No.3 Hua Qiang Road, Tian He District, Guangzhou 510623, Китай.

ПРОДУКЦИЯ Горелки комбинированные блочные автоматические промышленные, модели: G225X, G258A, G270X, G325X, G335A, G380A, G400A, мощность: 165 – 4000 кВт; C83X, C92A, C120A, мощность: 200 - 1200 кВт; E115X, E150X, E165A, E180X, E205A, мощность: 250 - 2050 кВт; H365X, H440X, H455A, H500X, H630A, H685A, мощность: 580 - 6850 кВт; K590X, K660X, K750X, K750A, K890A, K990A, мощность: 670 - 9900 кВт; N880X, N925X, N1060X, N1060A, N1300A, мощность: 1200 - 13000 кВт. Серийный выпуск.

Код ТН ВЭД ЕАЭС 8416 20 200 0

СООТВЕТСТВУЕТ ТРЕБОВАНИЯМ Технического регламента Таможенного союза ТР ТС 016/2011 "О безопасности аппаратов, работающих на газообразном топливе".

СЕРТИФИКАТ ВЫДАН НА ОСНОВАНИИ Протокола испытаний № Н-Т/280823-44 от 28.08.2023 года, выданного ИЦ ТОО «KAZAUTOCERT» аттестат аккредитации регистрационный номер KZ.T.02.2385. Акта анализа состояния производства №072723-16 от 01.08.2023 года выданного Органом по сертификации продукции ОсОО "Центр Сертификации и Испытаний" (Регистрационный номер аттестата аккредитации органа по сертификации KG 417/КЦА.ОСП.026), проведенного экспертом Рябоконь Александром Николаевичем. Схема сертификации: 1с.

ДОПОЛНИТЕЛЬНАЯ ИНФОРМАЦИЯ ГОСТ EN 676-2016 "Горелки газовые автоматические с принудительной подачей воздуха для горения" Условия и сроки хранения, срок службы указаны в прилагаемой к продукции эксплуатационной документации. Действие сертификата соответствия распространяется на серийно выпускаемую продукцию, изготовленную с даты изготовления отобранных образцов (проб) продукции, прошедших исследования (испытания) и изменения: 05.2023 года. Договор уполномоченного лица № 2/KZ 2023 от 11.05.2023 года.

СРОК ДЕЙСТВИЯ С 28.08.2023 **ПО** 27.08.2028

Руководитель (уполномоченное лицо) органа по сертификации **М.П.** Аксупова Айсулу Мырзабековна
(Подпись) (ФИО)

Эксперт (эксперт-аудитор) (эксперты (эксперты-аудиторы)) Окошев Чынгыз Жороевич
(Подпись) (ФИО)